MAD76 Academy: F. ROS2 Coding

Frank Tränkle*
Hochschule Heilbronn, Germany

March 15, 2026

*frank.traenkle@hs-heilbronn.de

Contents

1 Agenda **4**

2 What is ROS **5**
2.1 Why ROS? 7

3 MAD76 and ROS **8**
3.1 ROS2 Workspaces and Packages 12
3.1.1 Exercises 14

4 ROS2 Joystick Input **15**
4.1 Start ROS2 Joystick Node 16
4.2 Measure ROS2 Joystick Messages 17

5 ROS2 Node for MAD76 IO **21**
5.1 ROS2 Workspace and Package for MAD76 IO 22
5.2 Code and Run ROS2 Node 25

6 Joystick Control of MAD76 **34**
6.1 Functional Chain of Control Theory 35

6.2 ROS2 Node for Joystick Control 36
6.2.1 Exercises 46
6.3 ROS2 Node for Safe Car Control 47
6.3.1 Exercises 49

1 Agenda

- What is ROS? Why ROS? (see Section 2)
- MAD76 and ROS2 (see Section 3)
- ROS2 Joystick Input (see Section 4)
- ROS2 Node for MAD76 IO (see Section 5)
- Joystick Control of MAD76 (see Section 6)

Teaching Objectives

- Understand middlewares (MWs) for automotive and robotics
- Understand computer communication with MWs
- Learn how to operate ROS2 on command line
- Learn how to measure signals with ROS2
- Learn how to code for ROS2 in Python
- Learn functional chain in Control Theory / Embedded Systems and message-based-communication of signals
- Run MAD76
- Configure MAD76 computer vision
- Program joystick control

2 What is ROS

- Robot Operating System (ROS) is a middleware (MW) and not an operating system (OS)
  - *Middleware (MW)* = Intermediate SW between OS and application software (ASW)
- ROS is a programming framework for robotics and automotive
- ROS is for distributed computing
- ROS is for embedded, realtime systems
  - *Embedded* = Computer controls device (vehicle, robot, TV, smartphone, etc.)
  - *Realtime* = Guaranteed response within predefined time intervals
- ROS supports the following operating systems
  - Linux, Windows, macOS, QNX
- ROS provides programming libraries and tools for coding in a wide variety of languages and environments
  - Python, C, C++, Rust, MATLAB/Simulink, Bash, etc.

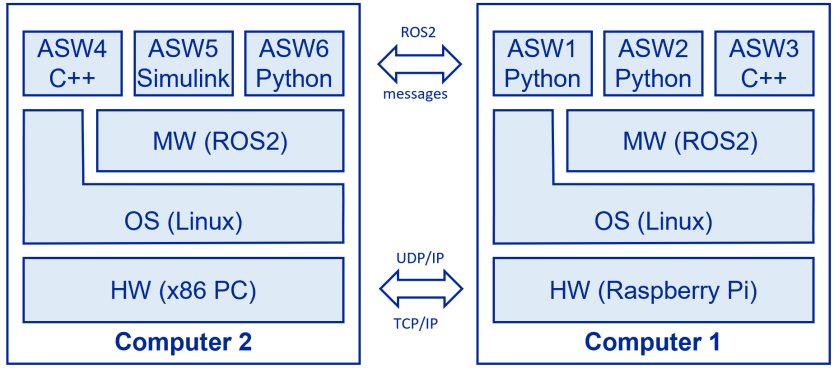

- ROS includes tools for measuring, simulation, visualization, and debugging
- ROS is open-source and has a large community
- ROS is for academics and industry
- We use ROS2 Jazzy Jalisco [2], the second generation of ROS

2.1 Why ROS?

- ROS apps are easy to code
- Distributed computing is straightforward
- Apps are easy to port from one HW or OS to another
- Communication is transparent, platform- and language-independent
- Easy switch between simulation and real system
- ROS provides a large set of ready-to-use libraries for robotics and automotive
  - cameras, LiDAR, GPS, inertial measurement units (IMU), etc.
  - robot arms, wheels, motors, etc.
  - robot control, navigation, object tracking, mapping, etc.
- ROS is easy to configure and program, compared to other middlewares (e.g., AUTOSAR, Robert Bosch AOS)
  - But: standard ROS is not as safe and secure

3 MAD76 and ROS

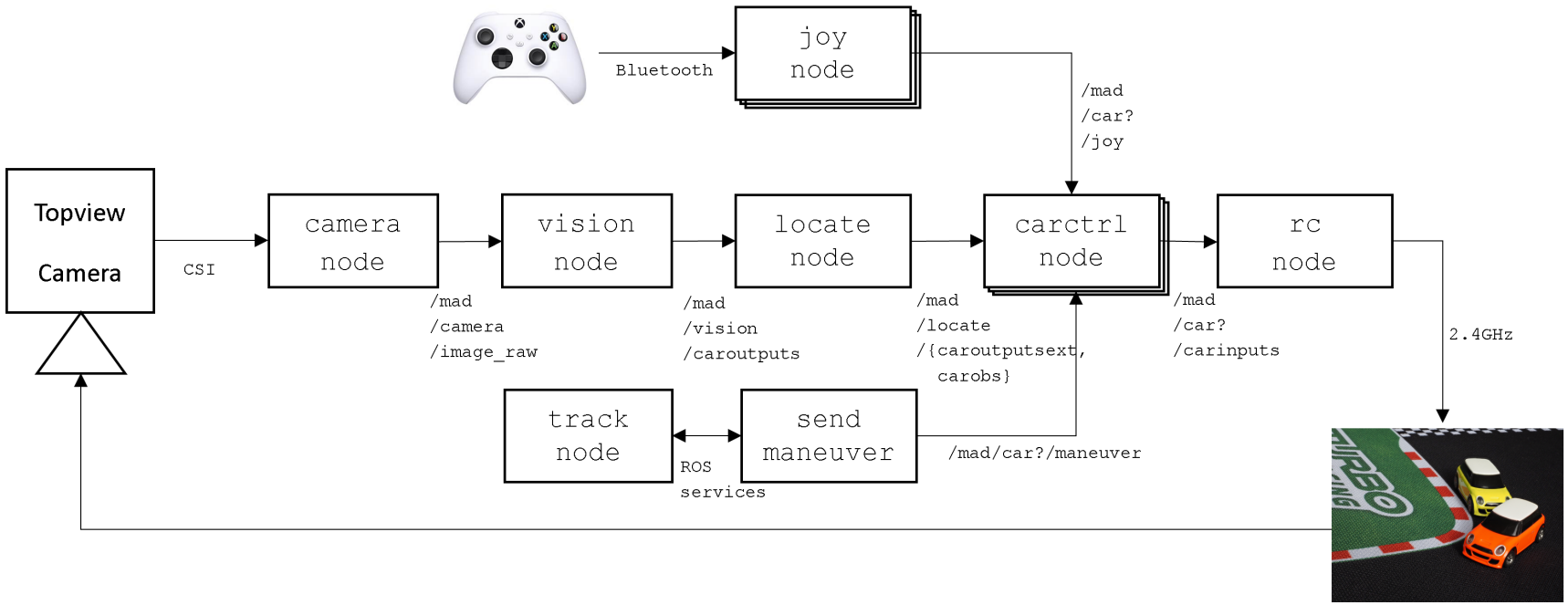

Figure 1: ROS2 nodes and topics of MAD76 Driving Stack

- The MAD76 driving stack = ROS2 nodes
- *ROS2 Node*
  - application software component
  - typically one Linux process
  - communicates with other ROS2 nodes via messages and services
- *ROS2 Topic*
  - message-based communication channel with a unique topic name and a predefined message type
  - topic name is a string
  - topic name may be organized in hierarchies (similar to file paths)
  - ROS2 uses a publish-subscribe pattern (similar to WhatsApp groups)
    * multiple nodes can publish messages to the same topic
    * multiple nodes can subscribe to the same topic and receive the same messages
  - internally, ROS2 communication is implemented using Data Distribution Service (DDS) with TCP/IP, UDP/IP, or shared memory

- The rectangles are *ROS2 nodes*

ROS2 Node	Description
`camera_node`	standard ROS2 node for RPi camera input and image acquisition [1]
`joy_node`	standard ROS2 node for joystick input [3] (will be used in this session)
`visionnode`	computer vision based on AruCo markers
`locatenode`	multi-object tracking
`carctrlnode`	speed control, position control, pathfollowing control, racing
`rcnode`	controls cars via MAD76 IO (will be developed in this session)
`tracknode`	stores map of MAD76 map
`send_maneuver.py`	generates maneuvers for cars

- The single-pointed arrows are *ROS2 topics*

ROS2 Topic	ROS2 Message Type	Description
`/mad/camera/image_raw`	`sensor_msgs.msg.Image`	camera frames with sampling time $25\mathrm{ms}$
`/mad/vision/caroutputs`	`mbmadmsgs.msg.CarOutputsList`	list of car poses
`/mad/locate/caroutputsext`	`mbmadmsgs.msg.CarOutputsExtList`	list of car poses including velocities
`/mad/car?/carinputs`	`mbmadmsgs.msg.CarInputs`	control signals for each individual car
`/mad/car?/maneuver`	`mbmadmsgs.msg.DriveManeuver`	maneuvers for path following and parking
`/mad/car?/joy`	`sensor_msgs.msg.Joy`	standard ROS2 joystick messages

- The double-pointed arrow is a *ROS2 service*
  - A service is similar to a function call
  - But across process boundaries
  - A service can have a request and a response (similar to function arguments and return values)

3.1 ROS2 Workspaces and Packages

- ROS2 is for *component-based SW engineering*
  - SW is engineered in teams or world-wide
  - Individual SW engineers develop individual SW components in teams
  - With reducing the number of team conflicts
- ROS2 organizes SW in ROS2 workspaces and ROS2 packages
  - *ROS2 workspaces* consist of ROS2 packages
  - *ROS2 packages* contain
    - ROS2 nodes
    - Message and service type definitions
    - Launch files
  - ROS2 workspaces may depend on each other
  - ROS2 packages may depend on each other

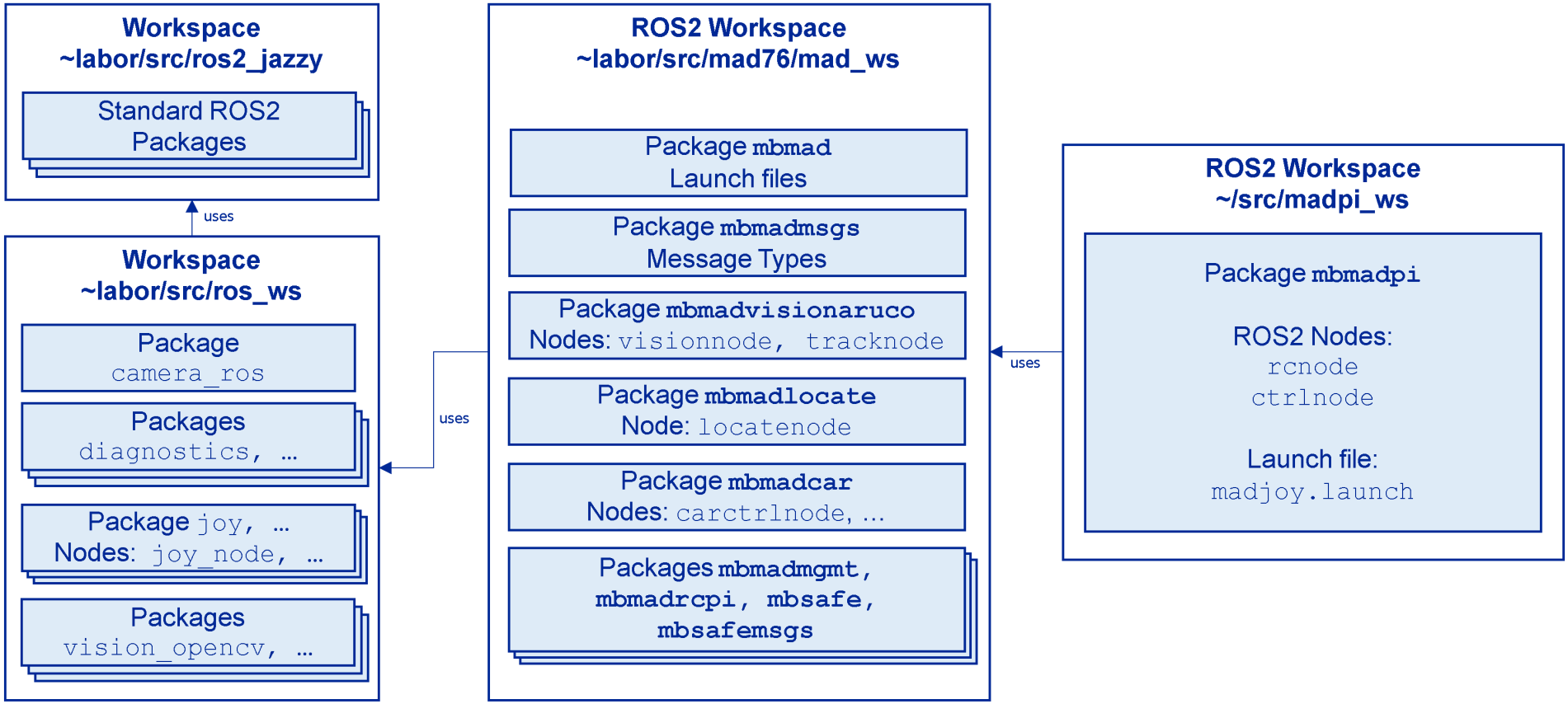
Workspace
~labor/src/ros2_jazzy
Standard ROS2 Packages
uses
Workspace
~labor/src/ros_ws
Package camera_ros
Packages diagnostics, ...
Package joy, ...
Nodes: joy_node, ...
Packages vision_opencv, ...
uses
ROS2 Workspace
~labor/src/mad76/mad_ws
Package mbmad
Launch files
Package mbmadmsgs
Message Types
Package mbmadvisionaruco
Nodes: visionnode, tracknode
Package mbmadlocate
Node: locatenode
Package mbmadcar
Nodes: carctrlnode, ...
Packages mbmadmgmt, mbmadrcpi, mbsafe, mbsafemsgs
uses
ROS2 Workspace
~/src/madpi_ws
Package mbmadpi
ROS2 Nodes:
rcnode
ctrlnode
Launch file:
madjoy.launch

3.1.1 Exercises

F.3.1.1 Start the MAD76 software stack and adjust the Raspberry Pi camera according to Sections *Mounting Camera* and *Focus and Aperture* in user manual Computer Vision Configuration. Required results are:

- The computer vision of MAD76 shall detect all 4 frame markers with high reliability and no interrupts
- The computer vision shall detect the car markers at any position on the track with high reliability and no interrupts
- Smartphone or screencast video file which demonstrates this reliability in computer vision
- This video file shall be readable by the VLC media player

F.3.1.2 Start MAD76 car race according to user manual Car Race.

4 ROS2 Joystick Input

Agenda

- Start ROS2 joystick node (see Section 4.1)
- Measure ROS2 joystick messages (see Section 4.2)

4.1 Start ROS2 Joystick Node

- ROS2 nodes are started using the command

```
ros2 run <package> <node>
```

package	ROS2 package (packages contain nodes, message types, etc. and have unique namespaces)
node	ROS2 node (binary)

- The following ROS2 command starts ROS2 node `joy_node` from ROS2package `joy`

```
ros2 run joy joy_node
```

  - ROS2 package `joy` is available from standard ROS2 workspace `~labor/src/ros_ws`
  - ROS2 node `joy_node` accesses joystick via Linux Joystick API
  - `joy_node` reads in all joystick axes and button values
  - `joy_node` publishes joystick input as ROS2 messages to the ROS2 topic `/joy`

- List all running nodes

```
ros2 node list
```

- List all available topics

```
ros2 topic list
```

4.2 Measure ROS2 Joystick Messages

- ROS2 messages can be measured by using the command

```
ros2 topic echo <topic>
```

`topic`	Topic to be subscribed to. All messages published to this topic will be displayed.

- Open a new terminal and measure joystick messages on topic `/joy`

```
ros2 topic echo /joy
```

- Make sure that the joystick is powered on and connected to bluetooth according to `https://pimylifeup.com/xbox-controllers-raspberry-pi/`
- Move the joystick levers and push buttons ⇝ message output is changing accordingly
- The following command shows the frequency of joystick messages

```
ros2 topic hz /joy
```

ROS2 Message Types

- ROS2 node `joy_node` publishes ROS2 messages of type `sensor_msgs.msg.Joy` on ROS2 topic `/joy`
- Message types in ROS2 are defined in `.msg` files
- You can view the definition of the message type `sensor_msgs.msg.Joy` by entering

```
ros2 interface show sensor_msgs/msg/Joy
```

- or by

```
less ~labor/src/ros2_jazzy/install/sensor_msgs/share/sensor_msgs/msg/Joy.msg
```

- The message type `sensor_msgs::msg::Joy` has the following fields

Field Name	ROS2 Type	Description
`header`	`std_msgs::msg::Header`	Standard message header containing timestamp in nanoseconds
`axes`	`float32[]`	Joystick axes values
`buttons`	`int32[]`	Joystick button states

Signals

- *Signals* are a key mathematical concept in *Control Theory* (3rd semester at university)
- Joystick axes and button values are *signals*
- Signals are measurement values with a time axis
- A signal f can be expressed as a mathematical function of time: $f : t \mapsto f(t)$
- Example: signal function $u_J(t)$ for the vertical axis of the left joystick lever
  - we will us $u_J(t)$ to control the car via MAD76 IO
- Signals can be graphically displayed in signal-time-diagrams
- Signals may be encoded in messages
- ROS2 provides tools for visualizing and analyzing these signals
- Standard ROS2 node `rqt_plot` can be used to plot the signals in a realtime signal-time-diagram

```
ros2 run rqt_plot rqt_plot
```

- Enter `/joy/axes[1]` in the entry field `Topic` to plot $u_J(t)$

`/joy`	topic name
`/axes`	field `axes` of message type `sensor_msgs.msg.Joy`
`[1]`	zero-based index of the joystick axis

- The x-axis in this signal-time-diagram is the time axis t in seconds
- The y-axis is the value axis $u_J \in [-1, 1]$ of signal function $u_J(t)$
- You may zoom the plot hitting the `Ctrl` key whileusing the mouse wheel or the right mouse button with horizontal or vertical drag
- You may move the plot using the left mouse button

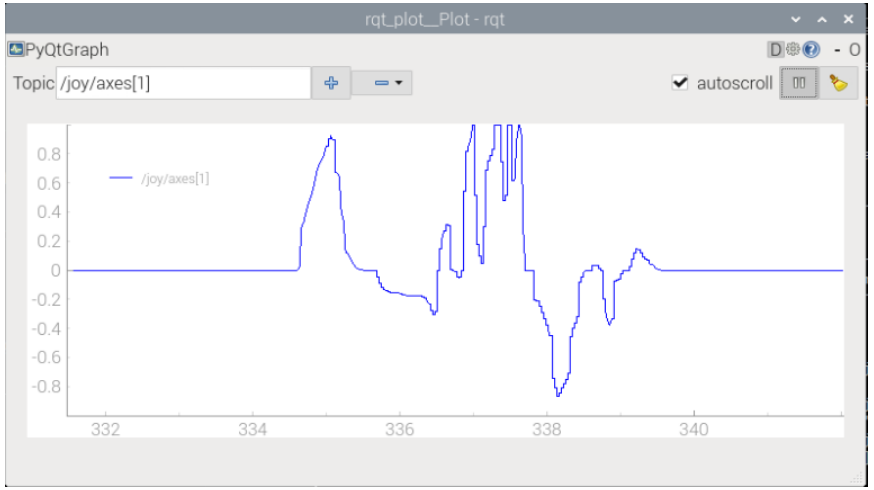

5 ROS2 Node for MAD76 IO

Agenda

- Create a new ROS2 workspace and package for MAD76 IO (see Section 5.1)
- Create and run ROS2 node for MAD76 IO power and potis (see Section 5.2)

5.1 ROS2 Workspace and Package for MAD76 IO

- Create
  - a new ROS2 workspace `~/src/madpi_ws`
  - a new ROS2 package `mbmadpi` in this ROS2 workspace
  - a new ROS2 node `rcnode` in this ROS2 package

```
mkdir -p ~/src/madpi_ws/src
cd ~/src/madpi_ws/src
ros2 pkg create --node-name=rcnode --build-type=ament_python mbmadpi
```

- Build this workspace and make it available in ROS2

```
cd ~/src/madpi_ws
colcon build --symlink-install
source install/setup.bash
```

- **IMPORTANT:** The build command `colcon` must be executed in ROS2 workspace directory `~/src/madpi_ws` and nowhere else
- `colcon` builds all ROS2 packages in this workspace
- `source install/setup.bash` runs the Bash script `setup.bash` which
  * sets up the environment for the workspace
  * makes the ROS2 packages, nodes, etc. available in ROS2 commands, e.g., `ros2 run`

- Edit the initialization Bash script `~/.bashrc` so that the ROS2 environment is always available in all terminals
  - Open file `~/.bashrc` in VS Code
  - Add the following line at the end of the file

```
source ~/src/madpi_ws/install/setup.bash
```

- Run the new ROS2 node `rcnode` of the new ROS package `mbmadpi`

```
ros2 run mbmadpi rcnode
```

  - The above command `ros2 pkg create` has automatically created a simple Python module `rcnode.py` which prints a "Hello world" message
  - We will now modify this module for doing real MAD76 IO

5.2 Code and Run ROS2 Node

Coding ROS2 Node `rcnode`

- The new ROS2 node `rcnode` will control the MAD76 IO by digital output and SPI in the same way as Python module `rctest.py` from learning session MAD76 I/O Programming
- It will re-use the Python library `mbmadrclib.py` from learning session MAD76 I/O Programming
- Copy `mbmadrclib.py` to the new ROS2 package `mbmadpi`

```
cd ~/src/madpi_ws
cp ~labor/src/mad76/madpi_ws/src/rcpi/scripts/mbmadrclib.py src/mbmadpi/mbmadpi
```

- Open ROS2 workspace `~/src/madpi_ws` in VS Code

```
code .
```

- Open file `src/mbmadpi/mbmadpi/rcnode.py` in VS Code
- Modify file `rcnode.py` as follows or copy an already existing version with the following command

```
cp ~labor/src/mad76/madpi_ws/src/mbmadpi/mbmadpi/rcnode.py src/mbmadpi/mbmadpi
```

```python
#!/usr/bin/env python3

"""
rcnode.py
---------

ROS2 Node to remotely control MAD76 cars

Copyright (C) 2025, Frank Traenkle, Hochschule Heilbronn
"""

import sys
import rclpy
import rclpy.node
import mbmadmsgs.msg
try:
    import mbmadpi.mbmadrclib as rc
except ImportError:
    import mbmadrclib as rc
try:
    import mbmadpi.carparameters as p
except ImportError:
    import carparameters as p

class RcNode(rclpy.node.Node):
```

```
    """
    RcNode is a ROS2 Node to remotely control MAD76 cars.
    """

    def __init__(self):
        """
        RcNode constructor."""
        super().__init__('rcnode', namespace='/mad')

    def init(self):
        """ Initialize the RcNode.

        Returns:
            bool: True if initialization was successful, False otherwise.
        """
        self.carid = 0
        self.spi = rc.initialize_spi()
        if not self.spi:
            self.get_logger().info("Failed to initialize SPI.")
            return False

        # initialize GPIO
        rc.initialize_gpio()

        # switch on power for the specified car
```

```
        rc.switchon_rcpower(self.carid)

        qosBestEffort = rclpy.qos.QoSProfile(
          reliability = rclpy.qos.QoSReliabilityPolicy.BEST_EFFORT,
          durability = rclpy.qos.QoSDurabilityPolicy.VOLATILE,
          history = rclpy.qos.QoSHistoryPolicy.KEEP_LAST,
          depth=1)
        qosReliable = rclpy.qos.QoSProfile(
          reliability = rclpy.qos.QoSReliabilityPolicy.RELIABLE,
          durability = rclpy.qos.QoSDurabilityPolicy.VOLATILE,
          history = rclpy.qos.QoSHistoryPolicy.KEEP_LAST,
          depth=1)
        self.sub_carinputs = self.create_subscription(
            mbmadmsgs.msg.CarInputs,
            f'/mad/car{self.carid}/carinputs',
            self.carinputs_callback,
            qosBestEffort
        )

        return True


    def spin(self):
        """ Spin the RcNode to process incoming messages."""
        rclpy.spin(self.node)
```

```
    def destroy(self):
        """ Clean up resources and shutdown the RcNode."""
        self.destroy_node()

    def carinputs_callback(self, msg):
        """ Callback function for car inputs messages.

        Args:
            msg (mbmadmsgs.msg.CarInputs): The CarInputs message containing carid, pedals, and steering.
        """
        #self.get_logger().info(f'CarInputs msg received: carid={msg.carid}, pedals={msg.pedals}, steering={msg.
steering}')

        # saturate pedals
        pedals = msg.pedals
        if pedals > p.P_UN_MAX:
            pedals = p.P_UN_MAX
        elif pedals < -p.P_UN_MAX:
            pedals = -p.P_UN_MAX

        # saturate steering
        steering = msg.steering
        if steering > p.P_DELTAN_MAX:
            steering = p.P_DELTAN_MAX
```

```
        elif steering < -p.P_DELTAN_MAX:
            steering = -p.P_DELTAN_MAX

        # SPI output
        rc.write_pedals(self.spi, self.carid, pedals)
        rc.write_steering(self.spi, self.carid, steering)

def main():
    """ Main function to initialize and run the RcNode."""
    ret = 0
    rclpy.init(args=sys.argv)
    node = RcNode()
    if not node.init():
        node.get_logger().info("Initialization failed, shutting down.")
        ret = 1
    else:
        rclpy.spin(node)
        node.destroy_node()
        rclpy.shutdown()
    sys.exit(ret)

if __name__ == '__main__':
    main()
```

- `rcnode.py` depends on `carparameters.py`

- Create Python module `carparameters.py` in the same directory as `rcnode.py` with the following content (or copy it from `~labor/src/mad76/madpi_ws/src/mbmadpi/mbmadpi/carparameters.py`)

```
#!/usr/bin/env python3

"""
carparameters.py
----------------

MAD76 car parameters

Copyright (C) 2025, Frank Traenkle, Hochschule Heilbronn
"""

P_UN_MAX = 0.2 # maximum normalized pedals signal [ 1 ]
P_DELTAN_MAX = 0.93 # maximum normalized steering signal [ 1 ]

TRACK_SIZE = [ -0.1, 0.82, 0.0, 0.5 ] # track size in [ m ]: [ x_min, x_max, y_min, y_max ]
SAFETY_BOUNDARY = 100e-3 # safety boundary in [ m ]: distance to track boundary

JOY_PEDALSAXIS = 1 # joystick axis for pedals
JOY_STEERINGAXIS = 2 # joystick axis for steering
JOY_BUTTON_A = 0 # joystick button for A (override safety halt)
```

Running ROS2 Node `rcnode`

- You may now run `rcnode.py` directly in VS Code
- or re-build the ROS2 workspace

```
cd ~/src/madpi_ws
colcon build --symlink-install
```

- and run the new ROS2 node

```
ros2 run mbmadpi rcnode
```

- `rcnode` subscribes to ROS2 topic `/mad/car0/carinputs` and processes incoming messages of type `mbmadmsgs.msg.CarInputs`
- Message type `mbmadmsgs.msg.CarInputs` has the following fields

Field	Data Type	Description
`carid`	`uint8`	car ID (0, 1, 2, ...)
`pedals`	`float32`	normalized pedals signal in range $u_n \in [-1, 1]$
`steering`	`float32`	normalized steering signal in range $\delta_n \in [-1, 1]$
...		

- Car 0 is controlled by sending messages to ROS2 topic `/mad/car0/carinputs` with the following command

```
ros2 topic pub /mad/car0/carinputs mbmadmsgs/msg/CarInputs "{carid: 0, pedals: 0.1, steering: 1.0}"
```

- You may display the current messages on ROS2 topic `/mad/car0/carinputs` by

```
ros2 topic echo /mad/car0/carinputs
```

- You may now control car 0 by sending different messages to ROS2 topic `/mad/car0/carinputs` with different values for `pedals` and `steering`

6 Joystick Control of MAD76

Agenda

- Functional chain of Control Theory (see Section 6.1)
- ROS2 node for joystick control (see Section 6.2)
- Exercise: ROS2 node for safe car control (see Section 6.3)

6.1 Functional Chain of Control Theory

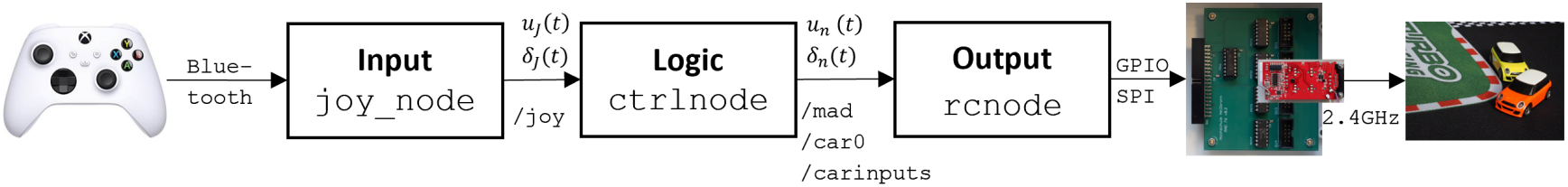

- Input
  - ROS2 node `joy_node` reads in sensor signals (joystick inputs)
- Logic
  - ROS2 node `ctrlnode` runs algorithms or AI agents
  - Algorithms or AI agents compute control signals
  - such that robot / car moves in a pre-defined or optimal way
- Output
  - ROS2 node `rcnode` outputs control signals to manipulate robot / car
  - by electromechanical actuators (MAD76 IO, motor, steering)

6.2 ROS2 Node for Joystick Control

- New ROS2 node `ctrlnode`
  - subscribes to joystick inputs on topic `/joy` and message type `sensor_msgs.msg.Joy`

Field	Data Type	Description
`axes[1]`	`float32`	joystick signal for motor $u_J \in [-1, 1]$
`axes[2]`	`float32`	joystick signal for steering $\delta_J \in [-1, 1]$

  - computes control signals for motor and steering based on joystick inputs

Signal	Description
u_n	normalized motor signal $u_n = 0.2 \cdot u_J$
δ_n	normalized steering signal $\delta_n = 0.93 \cdot \delta_J$

  - publishes control signals on topic `/mad/car0/carinputs` and message type `mbmadmsgs.msg.CarInputs`

Field	Data Type	Description
`carid`	`uint8`	0
`pedals`	`float32`	u_n
`steering`	`float32`	δ_n

Coding ROS2 Node `ctrlnode`

- Create `ctrlnode.py` in directory `~/src/madpi_ws/src/mbmadpi/mbmadpi` with VS Code
- Enter the following code or copy an already existing version with the following command

```
cd ~/src/madpi_ws
cp ~labor/src/mad76/madpi_ws/src/mbmadpi/mbmadpi/ctrlnode.py src/mbmadpi/mbmadpi
```

```
#!/usr/bin/env python3

"""
ctrlnode.py
-----------

ROS2 Node for joystick control of MAD76 cars

Copyright (C) 2025, Frank Traenkle, Hochschule Heilbronn
"""

import sys
import rclpy
import rclpy.node
import mbmadmsgs.msg
import sensor_msgs.msg
try:
```

```
    import mbmadpi.carparameters as p
except ImportError:
    import carparameters as p


class CtrlNode(rclpy.node.Node):
    """
    CtrlNode is a ROS2 Node for joystick control of MAD76 cars.
    """

    def __init__(self):
        """
        CtrlNode constructor."""
        super().__init__('ctrlnode', namespace='/mad')

    def init(self):
        """ Initialize the CtrlNode.

        Returns:
            bool: True if initialization was successful, False otherwise.
        """
        self.carid = 0

        qosBestEffort = rclpy.qos.QoSProfile(
          reliability = rclpy.qos.QoSReliabilityPolicy.BEST_EFFORT,
```

```
            durability = rclpy.qos.QoSDurabilityPolicy.VOLATILE,
            history = rclpy.qos.QoSHistoryPolicy.KEEP_LAST,
            depth=1)
        qosReliable = rclpy.qos.QoSProfile(
            reliability = rclpy.qos.QoSReliabilityPolicy.RELIABLE,
            durability = rclpy.qos.QoSDurabilityPolicy.VOLATILE,
            history = rclpy.qos.QoSHistoryPolicy.KEEP_LAST,
            depth=1)
        self.pub_carinputs = self.create_publisher(
            mbmadmsgs.msg.CarInputs,
            f'/mad/car{self.carid}/carinputs',
            qosBestEffort
        )
        self.sub_joy = self.create_subscription(
            sensor_msgs.msg.Joy,
            f'/joy',
            self.joy_callback,
            qosReliable
        )

        return True


    def spin(self):
        """ Spin the RcNode to process incoming messages."""
```

```
        rclpy.spin(self.node)

    def destroy(self):
        """ Clean up resources and shutdown the RcNode."""
        self.destroy_node()

    def joy_callback(self, msg):
        """ Callback function for joystick messages.

        Args:
            msg (sensor_msgs.msg.Joy): Joystick message containing control and button inputs.
        """
        pedals = msg.axes[p.JOY_PEDALSAXIS] * p.P_UN_MAX # normalized pedals signal
        steering = msg.axes[p.JOY_STEERINGAXIS] * p.P_DELTAN_MAX # normalized steering signal
        carinputs_msg = mbmadmsgs.msg.CarInputs()
        carinputs_msg.carid = self.carid
        carinputs_msg.pedals = pedals
        carinputs_msg.steering = steering
        self.pub_carinputs.publish(carinputs_msg)

def main():
    """ Main function to initialize and run the RcNode."""
    ret = 0
    rclpy.init(args=sys.argv)
    node = CtrlNode()
```

```
    if not node.init():
        node.get_logger().info("Initialization failed, shutting down.")
        ret = 1
    else:
        try:
            rclpy.spin(node)
        except KeyboardInterrupt:
            node.get_logger().info("Ctrl-C received, shutting down.")
        finally:
            node.destroy_node()
            rclpy.shutdown()
    sys.exit(ret)

if __name__ == '__main__':
    main()
```

- Register the new ROS2 node `ctrlnode` in ROS2 package `mbmadpi` by editing `~/src/madpi_ws/src/mbmadpi/setup.py` or copy an already existing version with the following command

```
cd ~/src/madpi_ws
cp ~labor/src/mad76/madpi_ws/src/mbmadpi/setup.py src/mbmadpi
```

```
from setuptools import find_packages, setup
import os
```

```
package_name = 'mbmadpi'

# Collect all files in launch directory
launch_files = []
for root, dirs, files in os.walk(os.path.join(package_name, '..', 'launch')):
    for file in files:
        launch_files.append(os.path.join(root, file))

setup(
    name=package_name,
    version='0.0.0',
    packages=find_packages(exclude=['test']),
    data_files=[
        ('share/ament_index/resource_index/packages',
            ['resource/' + package_name]),
        ('share/' + package_name, ['package.xml']),
        ('share/' + package_name + '/launch', launch_files),
    ],
    install_requires=['setuptools'],
    zip_safe=True,
    maintainer='traenkle',
    maintainer_email='frank.traenkle@hs-heilbronn.de',
    description='MAD76 Python-Only Package',
    license='GPL-3.0-only',
    tests_require=['pytest'],
```

```
    entry_points={
        'console_scripts': [
            'rcnode = mbmadpi.rcnode:main',
            'ctrlnode = mbmadpi.ctrlnode:main',
        ],
    },
)
```

- Rebuild ROS2 workspace ~/src/madpi_ws

```
cd ~/src/madpi_ws
colcon build --symlink-install
```

Running the Functional Chain

- Run the functional chain for MAD76 joystick control, namely the ROS2 nodes
  - `joy_node` for reading joystick inputs
  - `ctrlnode` for computing control signals
  - `rcnode` for output of the control signals to MAD76 IO
- Start the ROS2 nodes in separate terminals

```
ros2 run joy joy_node
```

```
ros2 run mbmadpi ctrlnode
```

```
ros2 run mbmadpi rcnode
```

- You can now control the red car 0 using the joystick

ROS2 Launch Files

- For easier ROS2 startup, launch files can run all ROS2 nodes at once
- Launch files can be coded in the following languages: YAML, XML, Python
- We use Extended Markup Language (XML)
- Create new subdirectory `launch` in directory `~/src/madpi_ws/src/mbmadpi`
- Create an XML launch file `madjoy.launch` in directory `~/src/madpi_ws/src/mbmadpi/launch`

```
<launch>
    <node pkg="joy" exec="joy_node" name="joy_node" output="screen"/>
    <node pkg="mbmadpi" exec="rcnode" name="rcnode" namespace="/mad/car0" output="screen"/>
    <node pkg="mbmadpi" exec="ctrlnode" name="ctrlnode" namespace="/mad/car0" output="screen"/>
</launch>
```

- Rebuild ROS2 workspace `~/src/madpi_ws`

```
cd ~/src/madpi_ws
colcon build --symlink-install
```

- Now you can start all 3 ROS2 nodes at once by running the launch file

```
ros2 launch mbmadpi madjoy.launch
```

6.2.1 Exercises

F.6.2.1 Change the processing of the joystick input signals for steering by modifying the method `joy_callback` in `ctrlnode.py` such that

- the steering signal is no longer the right, horizontal joystick axis `axes[2]`
- but the left and right triggers of the Xbox controller.

Required results are:

- Modified method `joy_callback` in `ctrlnode.py`
- Thrust and braking is still on left vertical joystick axis.
- But steering is now on left and right triggers.

6.3 ROS2 Node for Safe Car Control

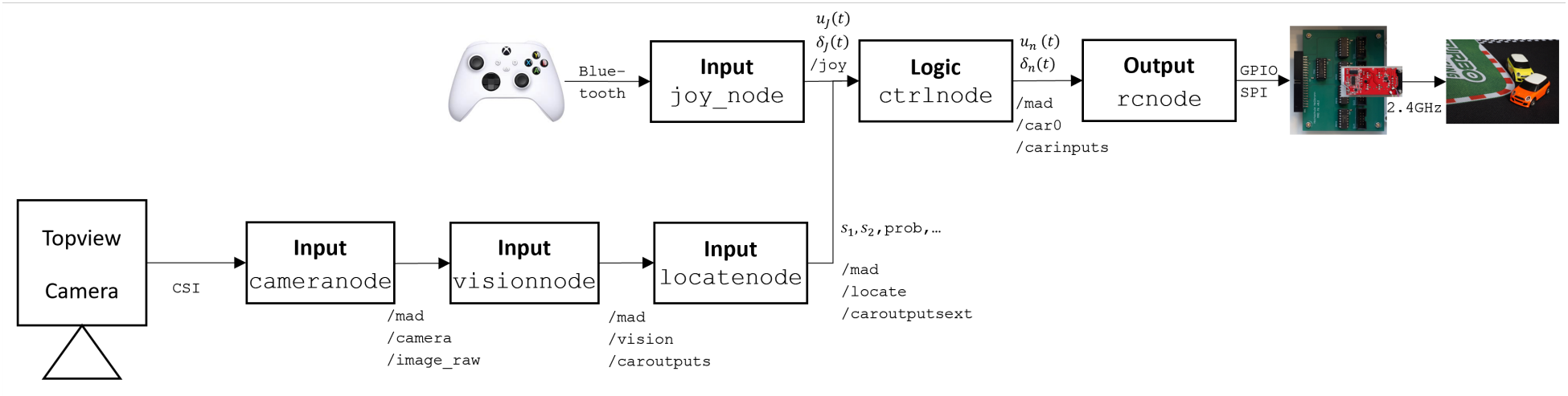

- ROS2 node `ctrlnode` shall be extended by safety halt
- Car should stop if car is not on track or computer vision fails
- `ctrlnode` shall subscribe to topic `/mad/locate/caroutputsext` from node `locatenode`

- Messages on `/mad/locate/caroutputsext` have the message type `mbmadmsgs.msg.CarOutputsExtList`

Field	Data Type	Description
`list`	`mbmadmsgs.msg.CarOutputsExt[]`	list of cars, one entry per car
...		

- Message type `mbmadmsgs.msg.CarOutputsExt` for each car

Field	Data Type	Description	Unit
`s`	`float32[2]`	array of the 2 Cartesian coordinates $s_1(t), s_2(t)$ of the car's rear axle center position	m
`v`	`float32`	speed $v(t)$	$\mathrm{m/s}$
`psi`	`float32`	yaw angle (orientation) $\psi(t) \in [-\pi, \pi]$	rad
`prob`	`float32`	probability (reliability) $p(t) \in [0\%, 100\%] = [0, 1]$ of valid measurement: – If $p = 1$ then computer vision has detected car with full reliability. – If $p = 0$ then computer vision has not detected car (car is not on track or computer vision has failed). – If $p < 1$ then computer vision has errors and is unreliable.	$[0, 1]$
...			

6.3.1 Exercises

F.6.3.1 Extend the launch file `madjoy.launch` to run the computer vision in addition to the nodes `joy_node`, `ctrlnode`, and `rcnode`

```
<launch>
    <include file="$(find-pkg-share mbmad)/launch/madpicam.launch" />
    <include file="$(find-pkg-share mbmad)/launch/madpitrack.launch" />
    <node pkg="joy" exec="joy_node" name="joy_node" output="screen"/>
    <node pkg="mbmadpi" exec="rcnode" name="rcnode" namespace="/mad/car0" output="screen"/>
    <node pkg="mbmadpi" exec="ctrlnode" name="ctrlnode" namespace="/mad/car0" output="screen"/>
</launch>
```

Rebuild the ROS2 workspace

```
cd ~/src/madpi_ws
colcon build --symlink-install
```

F.6.3.2 Measure the car position signals $s_1(t), s_2(t)$ with `rqt_plot` (see Section 4.2) by running the following commands in different terminals

```
ros2 launch mbmadpi madjoy.launch
```

```
ros2 run rqt_plot rqt_plot
```

and entering the following topics to the plot in `rqt_plot`

- `/mad/locate/caroutputsext/list[0]/s[0]`
- `/mad/locate/caroutputsext/list[0]/s[1]`

Required results are:

- Signal-time diagrams of $s_1(t), s_2(t)$ when driving car 0 with joystick

F.6.3.3 Identify boundaries for s_1, s_2 based on the plotted data, such that car is on the track. Required results are:

- Boundaries $s_{1,\min}, s_{1,\max}, s_{2,\min}, s_{2,\max}$ such that car is on track if
  - $s_{1,\min} \leq s_1(t) \leq s_{1,\max}$
  - $s_{2,\min} \leq s_2(t) \leq s_{2,\max}$

F.6.3.4 Extend the Python code of ROS2 node `ctrlnode` to include a safety halt logic

(a) Extent method `init` to subscribe to the topic `/mad/locate/caroutputsext`

(b) Implement a callback function `caroutputsext_callback` that stores the received message for car 0

```
def caroutputsext_callback(self, msg):
    """ Callback function for car position."""
```

```
        self.carmsg = msg.list[self.carid]
```

(c) Extend method `joy_callback` that uses `self.carmsg` to check if car is on track and the computer vision is reliable. If not then trigger a safety halt by setting `pedals` to `0.0`.

(d) Test your code.

Required results are:

- Extended `carctrl.py`

References

[1] Christian Rauch. *ROS2 Node for libcamera*. Accessed: 2025-08-19. 2025. URL: https://github.com/christianrauch/camera%5C_ros.
[2] ROS. *ROS2 Jazzy Jalisco*. Accessed: 2025-08-19. 2025. URL: https://docs.ros.org/en/jazzy/index.html.
[3] ROS. *ROS2 Package for Joysticks*. Accessed: 2025-08-19. 2025. URL: https://index.ros.org/p/joy/.