TEST YOUR UNDERSTANDING OF SECTION 38.4 Through which of the following angles is a photon of wavelength λ most likely to be deflected after passing through a slit of width a? Assume that λ is much less than a. (i) $\theta = \lambda/a$; (ii) $\theta = 3\lambda/2a$; (iii) $\theta = 2\lambda/a$; (iv) $\theta = 3\lambda/a$; (v) not enough information given to decide.

ANSWER

(ii) There is *zero* probability that a photon will be deflected by one of the angles where the diffraction pattern has zero intensity. These angles are given by $a \sin\theta = m\lambda$ with $m = \pm 1, \pm 2, \pm 3, \ldots$. Since λ is much less than a, we can write these angles as $\theta = m\lambda/a = \pm\lambda/a, \pm 2\lambda/a, \pm 3\lambda/a, \ldots$. These values include answers (i), (iii), and (iv), so it is impossible for a photon to be deflected through any of these angles. The intensity is not zero at $\theta = 3\lambda/2a$ (located between two zeros in the diffraction pattern), so there is some probability that a photon will be deflected through this angle.

CHAPTER 38 SUMMARY

Photons: Electromagnetic radiation behaves as both waves and particles. The energy in an electromagnetic wave is carried in units called photons. The energy E of one photon is proportional to the wave frequency f and inversely proportional to the wavelength λ, and is proportional to a universal quantity h called Planck's constant. The momentum of a photon has magnitude E/c. (See Example 38.1.)

$$E = hf = \frac{hc}{\lambda} \quad (38.2)$$

$$p = \frac{E}{c} = \frac{hf}{c} = \frac{h}{\lambda} \quad (38.5)$$

The photoelectric effect: In the photoelectric effect, a surface can eject an electron by absorbing a photon whose energy hf is greater than or equal to the work function ϕ of the material. The stopping potential V_0 is the voltage required to stop a current of ejected electrons from reaching an anode. (See Examples 38.2 and 38.3.)

$$eV_0 = hf - \phi \quad (38.4)$$

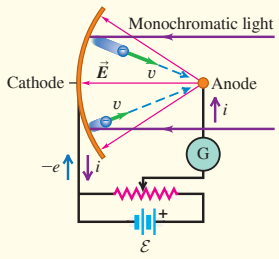

Photon production, photon scattering, and pair production: X rays can be produced when electrons accelerated to high kinetic energy across a potential increase V_{AC} strike a target. The photon model explains why the maximum frequency and minimum wavelength produced are given by Eq. (38.6). (See Example 38.4.) In Compton scattering a photon transfers some of its energy and momentum to an electron with which it collides. For free electrons (mass m), the wavelengths of incident and scattered photons are related to the photon scattering angle ϕ by Eq. (38.7). (See Example 38.5.) In pair production a photon of sufficient energy can disappear and be replaced by an electron–positron pair. In the inverse process, an electron and a positron can annihilate and be replaced by a pair of photons. (See Example 38.6.)

$$eV_{AC} = hf_{max} = \frac{hc}{\lambda_{min}} \quad (38.6)$$

(bremsstrahlung)

$$\lambda' - \lambda = \frac{h}{mc}(1 - \cos\phi) \quad (38.7)$$

(Compton scattering)

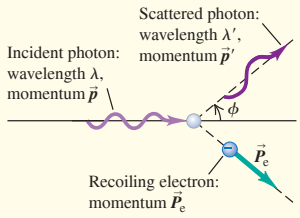

The Heisenberg uncertainty principle: It is impossible to determine both a photon's position and its momentum at the same time to arbitrarily high precision. The precision of such measurements for the x-components is limited by the Heisenberg uncertainty principle, Eq. (38.17); there are corresponding relationships for the y- and z-components. The uncertainty ΔE in the energy of a state that is occupied for a time Δt is given by Eq. (38.24). In these expressions, $\hbar = h/2\pi$. (See Example 38.7.)

$$\Delta x\,\Delta p_x \geq \hbar/2 \quad (38.17)$$

(Heisenberg uncertainty principle for position and momentum)

$$\Delta t\,\Delta E \geq \hbar/2 \quad (38.24)$$

(Heisenberg uncertainty principle for energy and time)

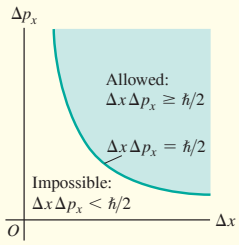

Chapter 38 Media Assets

For assigned homework and other learning materials, go to Mastering Physics.

GUIDED PRACTICE

KEY EXAMPLE VARIATION PROBLEMS

Be sure to review EXAMPLES 38.1, 38.2, and 38.3 (Section 38.1) before attempting these problems.

VP38.3.1 A laser emits 2.13×10^{16} photons per second, each of which has wavelength 625 nm. Find (a) the energy and momentum of a single photon and (b) the power output of the laser.

VP38.3.2 A certain metal has a work function of 4.55 eV. For this metal, find (a) the minimum frequency that light must have to produce photoelectrons and (b) the frequency that light must have to produce photoelectrons with maximum kinetic energy 1.53 eV.

VP38.3.3 In a photoelectric-effect experiment, the stopping potential is 1.37 V if the light used to illuminate the cathode has wavelength 475 nm. Find (a) the work function (in eV) of the cathode material and (b) the stopping potential if the wavelength is decreased to 425 nm.

VP38.3.4 Your results from a photoelectric-effect experiment show that the maximum speed of the emitted photoelectrons is 6.95×10^5 m/s when the cathode is illuminated with ultraviolet light of wavelength 306 nm. Find (a) the maximum photoelectron kinetic energy in eV, (b) the photon energy in eV, and (c) the work function.

Be sure to review EXAMPLES 38.5 and 38.6 (Section 38.3) before attempting these problems.

VP38.6.1 You use x-ray photons of wavelength 0.251 nm in a Compton-scattering experiment. At a scattering angle of 14.5°, what is the increase in the wavelength of the scattered x rays compared to the incident x rays? Express your results (a) in nm and (b) as a percentage of the wavelength of the incident x rays.

VP38.6.2 You use x rays of *frequency* 1.260×10^{18} Hz in a Compton-scattering experiment. Find the frequency of the scattered x rays if the scattering angle is (a) 90.00° and (b) 180.0°.

VP38.6.3 Compton scattering can also occur if a photon collides with a proton (mass 1.673×10^{-27} kg) at rest. If you do an experiment of this kind using gamma-ray photons with wavelength 2.50×10^{-12} m = 2.50 pm, for what scattering angle is the wavelength of the scattered gamma rays longer than the wavelength of the incident gamma rays by (a) 0.0100% and (b) 0.0800%?

VP38.6.4 An antiproton has the same mass and rest energy (938.3 MeV) as a proton, but has a negative change $-e$ instead of the positive charge $+e$ of the proton. A proton and an antiproton, initially far apart, move toward each other with the same speed and collide head-on, annihilating each other and producing two photons. Find the energies and wavelengths of the photons if the initial kinetic energies of the proton and antiproton are (a) both negligible and (b) both 545 MeV.

Be sure to review EXAMPLE 38.7 (Section 38.4) before attempting these problems.

VP38.7.1 A laser produces light of wavelength 633 nm in pulses that propagate in the $+x$-direction and that are 7.00×10^{-6} m in length. For an average photon in this pulse, find (a) the momentum p, (b) the minimum momentum uncertainty in kg · m/s and as a percentage of p, (c) the energy E, and (d) the minimum energy uncertainty in J and as a percentage of E.

VP38.7.2 Weather radar systems emit radio waves in pulses. For a typical system the frequency used is 3.00 GHz (1 GHz = 10^9 Hz) and the minimum energy uncertainty of the radio photons is 5.50×10^{-29} J. Find (a) the time duration of each pulse, (b) the length of each pulse, (c) the energy of an average photon, and (d) the minimum frequency uncertainty.

VP38.7.3 In a pulsed laser the minimum energy uncertainty of a photon is 2.33×10^{-20} J, which is 6.70% of the average energy of a photon in the pulse. Find (a) the wavelength and frequency of the laser light, (b) the minimum frequency uncertainty, and (c) the time duration of the pulse.

VP38.7.4 The average energy of a photon in a pulsed laser beam is 2.39 eV, with a minimum uncertainty of 0.0155 eV. Each pulse has an average of 5.00×10^{12} photons. Find (a) the time duration of each pulse, (b) the wavelength of the light, and (c) the energy per pulse in J.

BRIDGING PROBLEM Compton Scattering and Electron Recoil

An incident x-ray photon is scattered from a free electron that is initially at rest. The photon is scattered straight back at an angle of 180° from its initial direction. The wavelength of the scattered photon is 0.0830 nm. (a) What is the wavelength of the incident photon? (b) What are the magnitude of the momentum and the speed of the electron after the collision? (c) What is the kinetic energy of the electron after the collision?

SOLUTION GUIDE

IDENTIFY and SET UP

1. In this problem a photon is scattered by an electron initially at rest. In Section 38.3 you learned how to relate the wavelengths of the incident and scattered photons; in this problem you must also find the momentum, speed, and kinetic energy of the recoiling electron. You can find these because momentum and energy are conserved in the collision. Draw a diagram showing the momentum vectors of the photon and electron before and after the scattering.
2. Which key equation can be used to find the incident photon wavelength? What is the photon scattering angle ϕ in this problem?

EXECUTE

3. Use the equation you selected in step 2 to find the wavelength of the incident photon.
4. Use momentum conservation and your result from step 3 to find the momentum of the recoiling electron. (*Hint:* All of the momentum vectors are along the same line, but not all point in the same direction. Be careful with signs.)
5. Find the speed of the recoiling electron from your result in step 4. (*Hint:* Assume that the electron is nonrelativistic, so you can use the relationship between momentum and speed from Chapter 8. This is acceptable if the speed of the electron is less than about $0.1c$. Is it?)
6. Use your result from step 4 or step 5 to find the electron kinetic energy.

EVALUATE

7. You can check your answer in step 6 by finding the difference between the energies of the incident and scattered photons. Is your result consistent with conservation of energy?

PROBLEMS

•, ••, •••: Difficulty levels. **CP**: Cumulative problems incorporating material from earlier chapters. **CALC**: Problems requiring calculus. **DATA**: Problems involving real data, scientific evidence, experimental design, and/or statistical reasoning. **BIO**: Biosciences problems.

DISCUSSION QUESTIONS

Q38.1 In what ways do photons resemble other particles such as electrons? In what ways do they differ? Do photons have mass? Do they have electric charge? Can they be accelerated? What mechanical properties do they have?

Q38.2 There is a certain probability that a single electron may simultaneously absorb *two* identical photons from a high-intensity laser. How would such an occurrence affect the threshold frequency and the equations of Section 38.1? Explain.

Q38.3 According to the photon model, light carries its energy in packets called quanta or photons. Why then don't we see a series of flashes when we look at things?

Q38.4 Would you expect effects due to the photon nature of light to be generally more important at the low-frequency end of the electromagnetic spectrum (radio waves) or at the high-frequency end (x rays and gamma rays)? Why?

Q38.5 During the photoelectric effect, light knocks electrons out of metals. So why don't the metals in your home lose their electrons when you turn on the lights?

Q38.6 Most black-and-white photographic film (with the exception of some special-purpose films) is less sensitive to red light than blue light and has almost no sensitivity to infrared. How can these properties be understood on the basis of photons?

Q38.7 Human skin is relatively insensitive to visible light, but ultraviolet radiation can cause severe burns. Does this have anything to do with photon energies? Explain.

Q38.8 Explain why Fig. 38.4 shows that most photoelectrons have kinetic energies less than $hf - \phi$, and also explain how these smaller kinetic energies occur.

Q38.9 In a photoelectric-effect experiment, the photocurrent i for large positive values of V_{AC} has the same value no matter what the light frequency f (provided that f is higher than the threshold frequency f_0). Explain why.

Q38.10 In an experiment involving the photoelectric effect, if the intensity of the incident light (having frequency higher than the threshold frequency) is reduced by a factor of 10 without changing anything else, which (if any) of the following statements about this process will be true? (a) The number of photoelectrons will most likely be reduced by a factor of 10. (b) The maximum kinetic energy of the ejected photoelectrons will most likely be reduced by a factor of 10. (c) The maximum speed of the ejected photoelectrons will most likely be reduced by a factor of 10. (d) The maximum speed of the ejected photoelectrons will most likely be reduced by a factor of $\sqrt{10}$. (e) The time for the first photoelectron to be ejected will be increased by a factor of 10.

Q38.11 The materials called *phosphors* that coat the inside of a fluorescent lamp convert ultraviolet radiation (from the mercury-vapor discharge inside the tube) into visible light. Could one also make a phosphor that converts visible light to ultraviolet? Explain.

Q38.12 In a photoelectric-effect experiment, which of the following will increase the maximum kinetic energy of the photoelectrons? (a) Use light of greater intensity; (b) use light of higher frequency; (c) use light of longer wavelength; (d) use a metal surface with a larger work function. In each case justify your answer.

Q38.13 A photon of frequency f undergoes Compton scattering from an electron at rest and scatters through an angle ϕ. The frequency of the scattered photon is f'. How is f' related to f? Does your answer depend on ϕ? Explain.

Q38.14 Can Compton scattering occur with protons as well as electrons? For example, suppose a beam of x rays is directed at a target of liquid hydrogen. (Recall that the nucleus of hydrogen consists of a single proton.) Compared to Compton scattering with electrons, what similarities and differences would you expect? Explain.

Q38.15 Why must engineers and scientists shield against x-ray production in high-voltage equipment?

Q38.16 In attempting to reconcile the wave and particle models of light, some people have suggested that the photon rides up and down on the crests and troughs of the electromagnetic wave. What things are *wrong* with this description?

Q38.17 Some lasers emit light in pulses that are only 10^{-12} s in duration. The length of such a pulse is $(3 \times 10^8\ \text{m/s})(10^{-12}\ \text{s}) = 3 \times 10^{-4}\ \text{m} = 0.3\ \text{mm}$. Can pulsed laser light be as monochromatic as light from a laser that emits a steady, continuous beam? Explain.

EXERCISES

Section 38.1 Light Absorbed as Photons: The Photoelectric Effect

38.1 • A photon of green light has a wavelength of 520 nm. Find the photon's frequency, magnitude of momentum, and energy. Express the energy in both joules and electron volts.

38.2 • **BIO** **Response of the Eye.** The human eye is most sensitive to green light of wavelength 505 nm. Experiments have found that when people are kept in a dark room until their eyes adapt to the darkness, a *single* photon of green light will trigger receptor cells in the rods of the retina. (a) What is the frequency of this photon? (b) How much energy (in joules and electron volts) does it deliver to the receptor cells? (c) To appreciate what a small amount of energy this is, calculate how fast a typical bacterium of mass 9.5×10^{-12} g would move if it had that much energy.

38.3 • A 75 W light source consumes 75 W of electrical power. Assume all this energy goes into emitted light of wavelength 600 nm. (a) Calculate the frequency of the emitted light. (b) How many photons per second does the source emit? (c) Are the answers to parts (a) and (b) the same? Is the frequency of the light the same thing as the number of photons emitted per second? Explain.

38.4 • **BIO** A laser used to weld detached retinas emits light with a wavelength of 660 nm in pulses that are 25.0 ms in duration. The average power during each pulse is 0.650 W. (a) How much energy is in each pulse in joules? In electron volts? (b) What is the energy of one photon in joules? In electron volts? (c) How many photons are in each pulse?

38.5 • A photon has momentum of magnitude $8.24 \times 10^{-28}\ \text{kg} \cdot \text{m/s}$. (a) What is the energy of this photon? Give your answer in joules and in electron volts. (b) What is the wavelength of this photon? In what region of the electromagnetic spectrum does it lie?

38.6 •• A clean nickel surface is exposed to light of wavelength 206 nm. What is the maximum speed of the photoelectrons emitted from this surface? Use Table 38.1.

38.7 •• When ultraviolet light with a wavelength of 400.0 nm falls on a certain metal surface, the maximum kinetic energy of the emitted photoelectrons is measured to be 1.10 eV. What is the maximum kinetic energy of the photoelectrons when light of wavelength 300.0 nm falls on the same surface?

38.8 •• The photoelectric work function of potassium is 2.3 eV. If light that has a wavelength of 260 nm falls on potassium, find (a) the stopping potential in volts; (b) the kinetic energy, in electron volts, of the most energetic electrons ejected; (c) the speed of these electrons.

38.9 • When ultraviolet light with a wavelength of 254 nm falls on a clean copper surface, the stopping potential necessary to stop emission of photoelectrons is 0.181 V. (a) What is the photoelectric threshold wavelength for this copper surface? (b) What is the work function for this surface, and how does your calculated value compare with that given in Table 38.1?

Section 38.2 Light Emitted as Photons: X-Ray Production

38.10 • The cathode-ray tubes that generated the picture in early color televisions were sources of x rays. If the acceleration voltage in a television tube is 15.3 kV, what are the shortest-wavelength x rays produced by the television?

38.11 • An electron accelerates through a potential difference of 50.0 kV in an x-ray tube. When the electron strikes the target, 70.0% of its kinetic energy is imparted to a single photon. Find the photon's frequency, wavelength, and magnitude of momentum.

38.12 •• (a) What is the minimum potential difference between the filament and the target of an x-ray tube if the tube is to produce x rays with a wavelength of 0.160 nm? (b) What is the shortest wavelength produced in an x-ray tube operated at 30.0 kV?

Section 38.3 Light Scattered as Photons: Compton Scattering and Pair Production

38.13 • An x ray with a wavelength of 0.100 nm collides with an electron that is initially at rest. The x ray's final wavelength is 0.119 nm. What is the final kinetic energy of the electron?

38.14 • X rays are produced in a tube operating at 24.0 kV. After emerging from the tube, x rays with the minimum wavelength produced strike a target and undergo Compton scattering through an angle of 45.0°. (a) What is the original x-ray wavelength? (b) What is the wavelength of the scattered x rays? (c) What is the energy of the scattered x rays (in electron volts)?

38.15 •• X rays with initial wavelength 0.0665 nm undergo Compton scattering. What is the longest wavelength found in the scattered x rays? At which scattering angle is this wavelength observed?

38.16 •• A photon with wavelength $\lambda = 0.1385$ nm scatters from an electron that is initially at rest. What must be the angle between the direction of propagation of the incident and scattered photons if the speed of the electron immediately after the collision is 8.90×10^6 m/s?

38.17 •• If a photon of wavelength 0.04250 nm strikes a free electron and is scattered at an angle of 35.0° from its original direction, find (a) the change in the wavelength of this photon; (b) the wavelength of the scattered light; (c) the change in energy of the photon (is it a loss or a gain?); (d) the energy gained by the electron.

38.18 •• A photon scatters in the backward direction ($\phi = 180°$) from a free proton that is initially at rest. What must the wavelength of the incident photon be if it is to undergo a 10.0% change in wavelength as a result of the scattering?

38.19 • A beam of photons with just barely enough individual photon energy to create electron–positron pairs undergoes Compton scattering from free electrons before any pair production occurs. (a) Can the Compton-scattered photons create electron–positron pairs? (b) Calculate the momentum magnitude of the photons found at a 20.0° angle from the direction of the original beam.

38.20 • An electron and a positron are moving toward each other and each has speed $0.500c$ in the lab frame. (a) What is the kinetic energy of each particle? (b) The e^+ and e^- meet head-on and annihilate. What is the energy of each photon that is produced? (c) What is the wavelength of each photon? How does the wavelength compare to the photon wavelength when the initial kinetic energy of the e^+ and e^- is negligibly small (see Example 38.6)?

Section 38.4 Wave–Particle Duality, Probability, and Uncertainty

38.21 • An ultrashort pulse has a duration of 7.20 fs and produces light at a wavelength of 522 nm. What are the momentum and momentum uncertainty of a single photon in the pulse?

38.22 • A horizontal beam of laser light of wavelength 585 nm passes through a narrow slit that has width 0.0620 mm. The intensity of the light is measured on a vertical screen that is 2.00 m from the slit. (a) What is the minimum uncertainty in the vertical component of the momentum of each photon in the beam after the photon has passed through the slit? (b) Use the result of part (a) to estimate the width of the central diffraction maximum that is observed on the screen.

38.23 • A laser produces light of wavelength 620 nm in an ultrashort pulse. What is the minimum duration of the pulse if the minimum uncertainty in the energy of the photons is 1.0%?

PROBLEMS

38.24 •• (a) If the average frequency emitted by a 120 W light bulb is 5.00×10^{14} Hz and 10.0% of the input power is emitted as visible light, approximately how many visible-light photons are emitted per second? (b) At what distance would this correspond to 1.00×10^{11} visible-light photons per cm^2 per second if the light is emitted uniformly in all directions?

38.25 •• CP BIO **Removing Vascular Lesions.** A pulsed dye laser emits light of wavelength 585 nm in 450 μs pulses. Because this wavelength is strongly absorbed by the hemoglobin in the blood, the method is especially effective for removing various types of blemishes due to blood, such as port-wine–colored birthmarks. To get a reasonable estimate of the power required for such laser surgery, we can model the blood as having the same specific heat and heat of vaporization as water ($4190\ \text{J/kg}\cdot\text{K}$, 2.256×10^6 J/kg). Suppose that each pulse must remove 2.0 μg of blood by evaporating it, starting at 33°C. (a) How much energy must each pulse deliver to the blemish? (b) What must be the power output of this laser? (c) How many photons does each pulse deliver to the blemish?

38.26 • A 3.00 W beam of light of wavelength 125 nm falls on a metal surface. You observe that the maximum kinetic energy of the ejected electrons is 4.20 eV. Assume that each photon in the beam ejects a photoelectron. (a) What is the work function (in electron volts) of this metal? (b) How many photoelectrons are ejected each second from this metal? (c) If the power of the light beam, but not its wavelength, were reduced by half, what would be the answer to part (b)? (d) If the wavelength of the beam, but not its power, were reduced by half, what would be the answer to part (b)?

38.27 •• CP We can estimate the number of photons in a room using the following reasoning: The intensity of the sun's rays at the earth's surface is roughly 1000 W/m^2. A typical room is illuminated by indirect light or by light bulbs so that its light intensity is some fraction of that value. (a) Estimate the intensity of the light that enters your room. (b) Model the light as entering uniformly at the ceiling and exiting uniformly at the floor. Estimate the area A of the floor and ceiling, and the height H of your room. (c) Estimate how long it takes light to travel from the ceiling to the floor of your room by dividing H by the speed of light. (d) Estimate the total power of the light that enters your room P by multiplying your estimated intensity I by the area of your ceiling A. (e) Estimate the total light energy in your room E_{room} by multiplying the power P by the length of time it takes light to travel from ceiling to floor. (f) An average wavelength for light is in the middle of the visible spectrum, at roughly 500 nm. What is the energy of a 500 nm photon? (g) The total number of photons in your room N is the ratio of the energy E_{room} to the energy per photon. What is your estimate for N?

38.28 •• **CP** A photon with wavelength $\lambda = 0.0780$ nm is incident on an electron that is initially at rest. If the photon scatters in the backward direction, what is the magnitude of the linear momentum of the electron just after the collision with the photon?

38.29 •• **CP** A photon with wavelength $\lambda = 0.1050$ nm is incident on an electron that is initially at rest. If the photon scatters at an angle of 60.0° from its original direction, what are the magnitude and direction of the linear momentum of the electron just after it collides with the photon?

38.30 •• **CP** All of the nutritional energy contained in fruits and vegetables is supplied by solar photons through photosynthesis reactions. (a) Estimate the amount of energy stored in a tomato by considering the number of Calories in that fruit. (*Note:* 1 Cal = 1 kcal = 4186 J, and you can look up the Calorie content of a tomato.) (b) Estimate the total leaf area on an average tomato plant. (c) If the solar intensity in your garden is 800 W/m^2, then what is the power supplied by solar photons to those leaves? (d) Fruit leaves have approximately 5% efficiency. The majority, 95%, of photons do not land on chloroplasts or lie outside the frequency range for photosynthesis. Use this information and an average wavelength of 600 nm to determine the number of solar photons involved in photosynthesis reactions each second on a tomato plant. (e) If an average tomato plant has ten tomatoes, and if half of the photon energy enters the fruit while the rest is used to grow roots and maintain plant cells, then how many photons supply energy to each tomato each second? (f) How many photons are needed to supply the energy content of each tomato? (g) Using these results and assuming the sun shines on the tomatoes 12 hours per day, estimate how long it should take to grow a tomato.

38.31 •• Nuclear fusion reactions at the center of the sun produce gamma-ray photons with energies of about 1 MeV (10^6 eV). By contrast, what we see emanating from the sun's surface are visible-light photons with wavelengths of about 500 nm. A simple model that explains this difference in wavelength is that a photon undergoes Compton scattering many times—in fact, about 10^{26} times, as suggested by models of the solar interior—as it travels from the center of the sun to its surface. (a) Estimate the increase in wavelength of a photon in an average Compton-scattering event. (b) Find the angle in degrees through which the photon is scattered in the scattering event described in part (a). (*Hint:* A useful approximation is $\cos\phi \approx 1 - \phi^2/2$, which is valid for $\phi \ll 1$. Note that ϕ is in radians in this expression.) (c) It is estimated that a photon takes about 10^6 years to travel from the core to the surface of the sun. Find the average distance that light can travel within the interior of the sun without being scattered. (This distance is roughly equivalent to how far you could see if you were inside the sun and could survive the extreme temperatures there. As your answer shows, the interior of the sun is *very* opaque.)

38.32 ••• **CP** A positron with speed v impinges horizontally upon an electron at rest. These particles annihilate and produce two photons with the same wavelength λ, each of which travels at angle ϕ with respect to the horizontal. (a) What is the condition for energy conservation in terms of m, γ, c, and h, where m is the electron mass and $\gamma = (1 - v^2/c^2)^{-1/2}$? (b) What is the condition for momentum conservation in terms of the same parameters and the angle ϕ? (c) Solve these equations and determine the energy of each photon E_{photon} and the angle ϕ, the latter as a function of only γ. (d) If the positron had 5.11 MeV of kinetic energy, then what is the energy of each photon, and what is the angle ϕ? (e) What positron speed would result in the photons traveling off perpendicular to each other? (f) If the positron with speed v was traveling in the $+x$-direction, then with what speed u should we perform a Lorentz velocity transformation to bring us to the "center of momentum" frame, where the total momentum is zero?

38.33 •• A photon with wavelength 0.1120 nm collides with a free electron that is initially at rest. After the collision the wavelength is 0.1140 nm. (a) What is the kinetic energy of the electron after the collision? What is its speed? (b) If the electron is suddenly stopped (for example, in a solid target), all of its kinetic energy is used to create a photon. What is the wavelength of this photon?

38.34 •• An x-ray photon is scattered from a free electron (mass m) at rest. The wavelength of the scattered photon is λ', and the final speed of the struck electron is v. (a) What was the initial wavelength λ of the photon? Express your answer in terms of λ', v, and m. (*Hint:* Use the relativistic expression for the electron kinetic energy.) (b) Through what angle ϕ is the photon scattered? Express your answer in terms of λ, λ', and m. (c) Evaluate your results in parts (a) and (b) for a wavelength of 5.10×10^{-3} nm for the scattered photon and a final electron speed of 1.80×10^8 m/s. Give ϕ in degrees.

38.35 •• **DATA** In developing night-vision equipment, you need to measure the work function for a metal surface, so you perform a photoelectric-effect experiment. You measure the stopping potential V_0 as a function of the wavelength λ of the light that is incident on the surface. You get the results in the table.

λ (nm)	100	120	140	160	180	200
V_0 (V)	7.53	5.59	3.98	2.92	2.06	1.43

In your analysis, you use $c = 2.998 \times 10^8$ m/s and $e = 1.602 \times 10^{-19}$ C, which are values obtained in other experiments. (a) Select a way to plot your results so that the data points fall close to a straight line. Using that plot, find the slope and y-intercept of the best-fit straight line to the data. (b) Use the results of part (a) to calculate Planck's constant h (as a test of your data) and the work function (in eV) of the surface. (c) What is the longest wavelength of light that will produce photoelectrons from this surface? (d) What wavelength of light is required to produce photoelectrons with kinetic energy 10.0 eV?

38.36 •• **DATA** While analyzing smoke detector designs that rely on the photoelectric effect, you are evaluating surfaces made from each of the materials listed in Table 38.1. One particular application uses ultraviolet light with wavelength 270 nm. (a) For which of the materials in Table 38.1 will this light produce photoelectrons? (b) Which material will result in photoelectrons of the greatest kinetic energy? What will be the maximum speed of the photoelectrons produced as they leave this material's surface? (c) What is the longest wavelength that will produce photoelectrons from a gold surface, if the surface has a work function equal to the value given for gold in Table 38.1? (d) For the wavelength calculated in part (c), what will be the maximum kinetic energy of the photoelectrons produced from a sodium surface that has a work function equal to the value given in Table 38.1 for sodium?

38.37 •• **DATA** To test the photon concept, you perform a Compton-scattering experiment in a research lab. Using photons of very short wavelength, you measure the wavelength λ' of scattered photons as a function of the scattering angle ϕ, the angle between the direction of a scattered photon and the incident photon. You obtain these results.

ϕ (deg)	30.6	58.7	90.2	119.2	151.3
λ' (pm)	5.52	6.40	7.60	8.84	9.69

Your analysis assumes that the target is a free electron at rest. (a) Graph your data as λ' versus $1 - \cos\phi$. What are the slope and y-intercept of the best-fit straight line to your data? (b) The Compton wavelength λ_C is defined as $\lambda_C = h/mc$, where m is the mass of an electron. Use the results of part (a) to calculate λ_C. (c) Use the results of part (a) to calculate the wavelength λ of the incident light.

38.38 ••• CP The work function of a material is examined using the apparatus shown schematically in **Fig. P38.38**. The ammeter measures the photocurrent. The voltage of the anode relative to the cathode is V_{AC}. (a) The switch is in position a while radiation with wavelength 140 nm is incident on the cathode. The potentiometer is set at $R = 3.20\ \text{k}\Omega$, and there is no photocurrent. What is the potential difference V_{AC}? (b) The resistance R is slowly adjusted to lower values until the first hint of a photocurrent is detected in the ammeter. That happens when $R = 334\ \Omega$. What is the value of V_{AC} at that point? (c) What is the work function ϕ of the cathode material? (d) The switch is then thrown to position b and the ammeter measures a photocurrent $i = 3.71$ mA. What is the current I in this case? (e) What is the value of V_{AC}? (f) The switch is returned to position a, and the wavelength of the light is reduced to 65.0 nm. The photocurrent increases. What is the minimum value of R for which the photocurrent will cease?

Figure P38.38

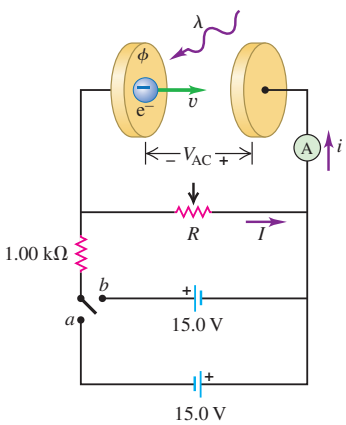

CHALLENGE PROBLEMS

38.39 ••• CP A photon with wavelength λ is incident on a stationary particle with mass M, as shown in **Fig. P38.39**. The photon is annihilated while an electron–positron pair is produced. The target particle moves off in the original direction of the photon with speed V_M. The electron travels with speed v at angle ϕ with respect to that direction. Owing to momentum conservation, the positron has the same speed as the electron. (a) Using the notation $\gamma = (1 - v^2/c^2)^{-1/2}$ and $\gamma_M = (1 - V_M^2/c^2)^{-1/2}$, write a relativistic expression for energy conservation in this process. Use the symbol m for the electron mass. (b) Write an analogous expression for momentum conservation.

Figure P38.39

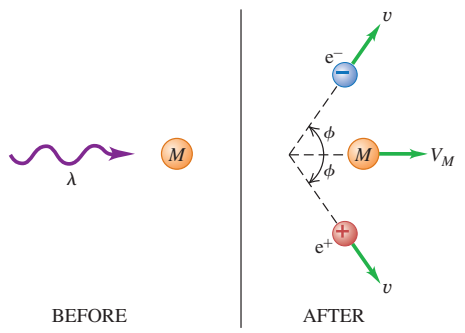

(c) Eliminate the ratio h/λ between your energy and momentum equations to derive a relationship between v/c, V_M/c, and ϕ in terms of the ratio m/M, keeping γ and γ_M as a useful shorthand notation. (d) Consider the case where $V_M \ll c$, and use a binomial expansion to derive an expression for γ_M to the first order in V_M. Use that result to rewrite your previous result as an expression for V_M in terms of c, v, m/M, and ϕ. (e) Are there choices of v and ϕ for which $V_M = 0$? (f) Suppose the target particle is a proton. If the electron and positron remain stationary, so that $v = 0$, then with what speed does the proton move, in km/s? (g) If the electron and positron each have total energy 5.00 MeV and move with $\phi = 60°$, then what is the speed of the proton? (*Hint:* First solve for γ and v.) (h) What is the energy of the incident photon in this case?

38.40 ••• Consider Compton scattering of a photon by a *moving* electron. Before the collision the photon has wavelength λ and is moving in the $+x$-direction, and the electron is moving in the $-x$-direction with total energy E (including its rest energy mc^2). The photon and electron collide head-on. After the collision, both are moving in the $-x$-direction (that is, the photon has been scattered by 180°). (a) Derive an expression for the wavelength λ' of the scattered photon. Show that if $E \gg mc^2$, where m is the rest mass of the electron, your result reduces to

$$\lambda' = \frac{hc}{E}\left(1 + \frac{m^2c^4\lambda}{4hcE}\right)$$

(b) A beam of infrared radiation from a CO_2 laser ($\lambda = 10.6\ \mu\text{m}$) collides head-on with a beam of electrons, each of total energy $E = 10.0$ GeV ($1\ \text{GeV} = 10^9\ \text{eV}$). Calculate the wavelength λ' of the scattered photons, assuming a 180° scattering angle. (c) What kind of scattered photons are these (infrared, microwave, ultraviolet, etc.)? Can you think of an application of this effect?

MCAT-STYLE PASSAGE PROBLEMS

BIO **Radiation Therapy for Tumors.** Malignant tumors are commonly treated with targeted x-ray radiation therapy. To generate these medical x rays, a linear accelerator directs a high-energy beam of electrons toward a metal target—typically tungsten. As they near the tungsten nuclei, the electrons are deflected and accelerated, emitting high-energy photons via bremsstrahlung. The resulting x rays are collimated into a beam that is directed at the tumor. The photons can deposit energy in the tumor through Compton and photoelectric interactions. A typical tumor has 10^8 cells/cm^3, and in a full treatment, 4 MeV photons may produce a dose of 70 Gy in 35 fractional exposures on different days. The *gray* (Gy) is a measure of the absorbed energy dose of radiation per unit mass of tissue: 1 Gy = 1 J/kg.

38.41 How much energy is imparted to one cell during one day's treatment? Assume that the specific gravity of the tumor is 1 and that $1\ \text{J} = 6 \times 10^{18}$ eV. (a) 120 keV; (b) 12 MeV; (c) 120 MeV; (d) 120×10^3 MeV.

38.42 While interacting with molecules (mainly water) in the tumor tissue, each Compton electron or photoelectron causes a series of ionizations, each of which takes about 40 eV. Estimate the maximum number of ionizations that one photon generated by this linear accelerator can produce in tissue. (a) 100; (b) 1000; (c) 10^4; (d) 10^5.

38.43 The high-energy photons can undergo Compton scattering off electrons in the tumor. The energy imparted by a photon is a maximum when the photon scatters straight back from the electron. In this process, what is the maximum energy that a photon with the energy described in the passage can give to an electron? (a) 3.8 MeV; (b) 2.0 MeV; (c) 0.40 MeV; (d) 0.23 MeV.

38.44 The probability of a photon interacting with tissue via the photoelectric effect or the Compton effect depends on the photon energy. Use **Fig. P38.44** to determine the best description of how the photons from the linear accelerator described in the passage interact with a tumor. (a) Via the Compton effect only; (b) mostly via the photoelectric effect until they have lost most of their energy, and then mostly via the Compton effect; (c) mostly via the Compton effect until they have lost most of their energy, and then mostly via the photoelectric effect; (d) via the Compton effect and the photoelectric effect equally.

Figure **P38.44**

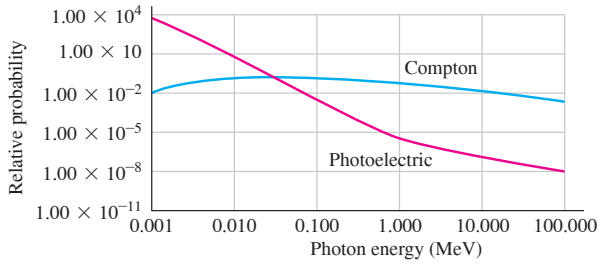

38.45 Higher-energy photons might be desirable for the treatment of certain tumors. Which of these actions would generate higher-energy photons in this linear accelerator? (a) Increasing the number of electrons that hit the tungsten target; (b) accelerating the electrons through a higher potential difference; (c) both (a) and (b); (d) none of these.

ANSWERS

Chapter Opening Question ?

(i) The energy of a photon E is inversely proportional to its wavelength λ: The shorter the wavelength, the more energetic is the photon. Since visible light has shorter wavelengths than infrared light, the headlamp emits photons of greater energy. However, the light from the infrared laser is far more *intense* (delivers much more energy per second per unit area to the patient's skin) because it emits many more photons per second than does the headlamp and concentrates them onto a very small spot.

Key Example VARIATION Problems

VP38.3.1 (a) $E = 3.18 \times 10^{-19}$ J, $p = 1.06 \times 10^{-27}$ kg · m/s (b) 6.77×10^{-3} W
VP38.3.2 (a) 1.10×10^{15} Hz (b) 1.47×10^{15} Hz
VP38.3.3 (a) 1.24 eV (b) 1.68 V
VP38.3.4 (a) 1.37 eV (b) 4.05 eV (c) 2.68 eV
VP38.6.1 (a) 7.73×10^{-5} nm (b) 0.0308%
VP38.6.2 (a) 1.247×10^{18} Hz (b) 1.235×10^{18} Hz
VP38.6.3 (a) 35.8° (b) 121°
VP38.6.4 (a) $E = 938.3$ MeV, $\lambda = 1.32 \times 10^{-15}$ m (b) $E = 1483.3$ MeV, $\lambda = 8.36 \times 10^{-16}$ m
VP38.7.1 (a) 1.05×10^{-27} kg · m/s (b) 7.54×10^{-30} kg · m/s, 0.720% (c) 3.14×10^{-19} J (d) 2.26×10^{-21} J, 0.720%
VP38.7.2 (a) 9.59×10^{-7} s (b) 288 m (c) 1.99×10^{-24} J (d) 8.30×10^{4} Hz $= 8.30 \times 10^{-5}$ GHz
VP38.7.3 (a) $\lambda = 572$ nm, $f = 5.25 \times 10^{14}$ Hz (b) 3.52×10^{13} Hz (c) 2.26×10^{-15} s
VP38.7.4 (a) 2.12×10^{-14} s (b) 519 nm (c) 1.91×10^{-6} J $= 1.91\ \mu$J

Bridging Problem

(a) 0.0781 nm
(b) 1.65×10^{-23} kg · m/s, 1.81×10^{7} m/s
(c) 1.49×10^{-16} J