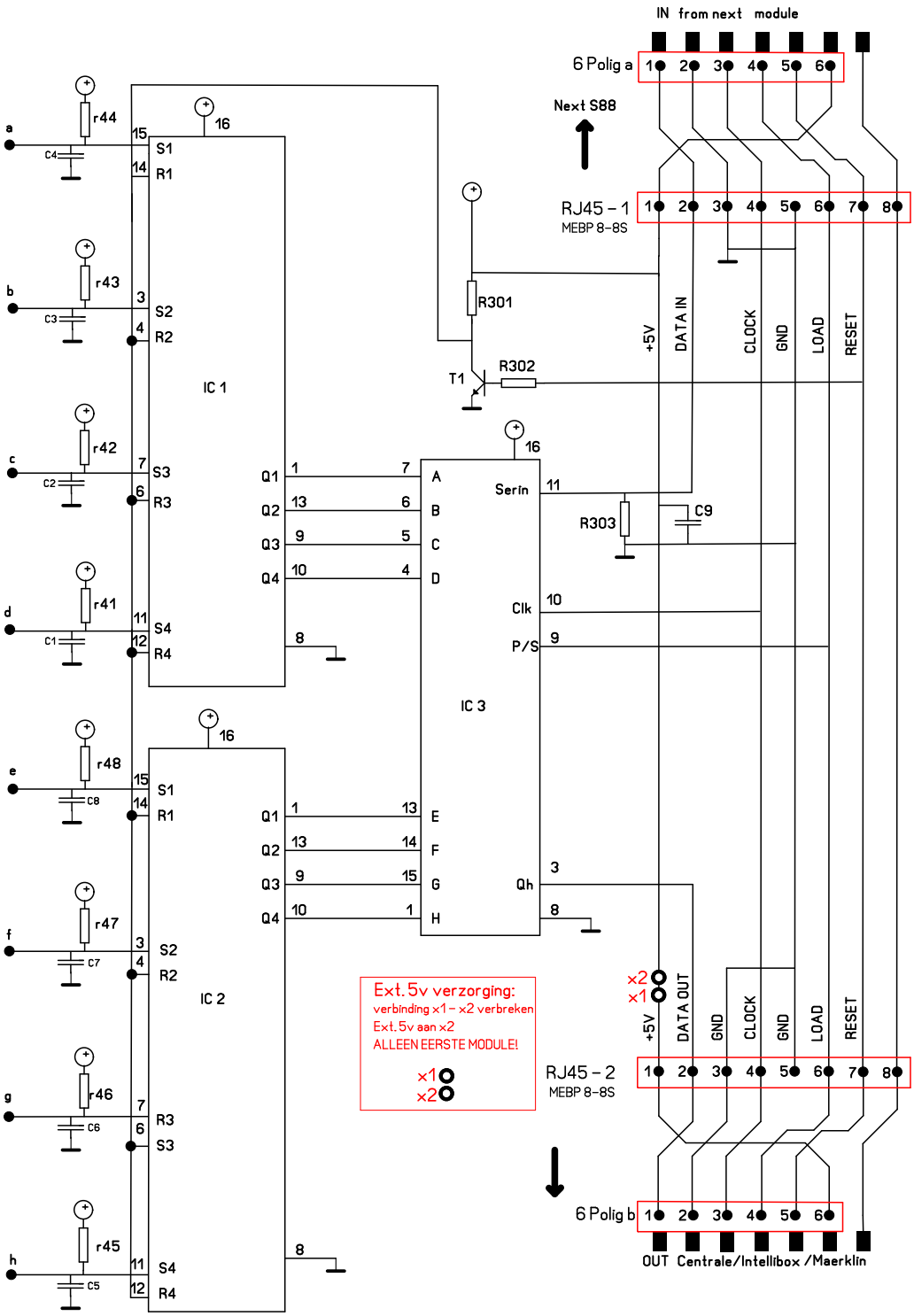
IN from next module
6 Polig a
Next S88
RJ45 – 1
MEBP 8-8S
R301
T1
R302
+5V
DATA IN
CLOCK
GND
LOAD
RESET
IC 1
IC 2
IC 3
Serin
Clk
P/S
Qh
R303
C9
Ext. 5v verzorging:
verbinding x1 – x2 verbreken
Ext. 5v aan x2
ALLEEN EERSTE MODULE!
x1
x2
DATA OUT
RJ45 – 2
MEBP 8-8S
6 Polig b
OUT Centrale/Intellibox /Maerklin