MPS

Create your own domain-specific language

```
public class Sample {

  public static void main(string[] args) {
    double a = Math.random();
    double b = Math.random();
    list<Integer> list = new arraylist<Integer>{1, 2, 3, 4};

    System.out.println(String.valueOf((∑_{k=0}^{99} [[1 k 0] [0 1.0 0] [0 0 1]])));
    System.out.println(String.valueOf((∑_{k in list} [[1 k 0] [0 1.0 0] [0 0 1]])));
    System.out.println(exp(a + i * b) - exp(a) * (cos(b) + i * sin(b)));

    matrix<Double> s = [[3.0 3^2 0 4] [sin(1) 1 7 - 1.0/2 + 1 0] [1 3 + 1.0/2 exp(1) 0] [1 2 3 0]];

    System.out.println(s);
```

```
Jet Mobile  Playback:  Hello, welcome in Jet-Mobile

    On button: 1 --> Internet
    On button: 2 --> Payment
    On button: 3 --> Technical support
    On button: 4 --> Other requirements

    Activity: Internet on button: 1  Playback Text:
        Did you know that our internet is faster than evr?
        On button: 1 --> Discount
        On button: 2 --> Data limit
        On button: * --> Return to main menu

        Activity: Discount on button: 1  Playback Text:
            Welcome in section of discounts, here is everything cheaper.
            On button: 1 --> Summer discount
            On button: 2 --> Hidden discounts
            On button: * --> Step back

            Activity: Summer discount on button: 1  Playback Text:
                Don't worry, while waiting you will listen your calm music.
                action
                Back | Direct call | Get information | Hang Up | Other | Record | Replay | Menu

            Activity: Hidden discounts on button: 2  Playback Text:
                Secret info
                Get info
```

Join our Customers:

SIEMENS · itemis · océ · McGill · UNIVERSITY OF WATERLOO · Campagne Laboratory

Research @ ECLIPSE FOUNDATION

THE PLATFORM FOR
OPEN INNOVATION AND COLLABORATION

Drop by our booth!

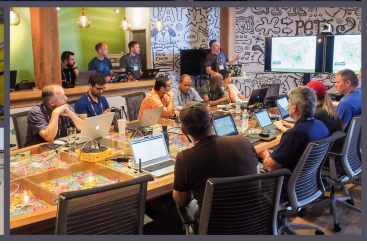

Papyrus

Design Room Live!

RealTime Software Tooling

Design Room ONE

Rational Software Architect Designer

Rational Software Architect RealTime Edition

HCL

A TOOL FOR AUTOMATICALLY SELECTING OPTIMAL MODEL TRANSFORMATION CHAINS

CITRIC

CHAINING TRANSFORMATIONS INFORMATION COVERAGE – AUTOMATED SELECTION OF OPTIMAL MODEL TRANSFORMATION CHAINS VIA SHORTEST-PATH ALGORITHMS

Francesco Basciani

" CITRIC tool is presented as a solution to mitigate the problem of characterizing the multitude of transformation chains that can be defined by composing existing model transformations to bridge source and target metamodels that are of interest for the modeler. It is based on well-established algorithms, and it is able to support modelers when multiple transformation chains are available. The optimal chain is automatically selected based on two quality criteria i.e., metamodel coverage and information loss. "

CITRIC ARCHITECTURE

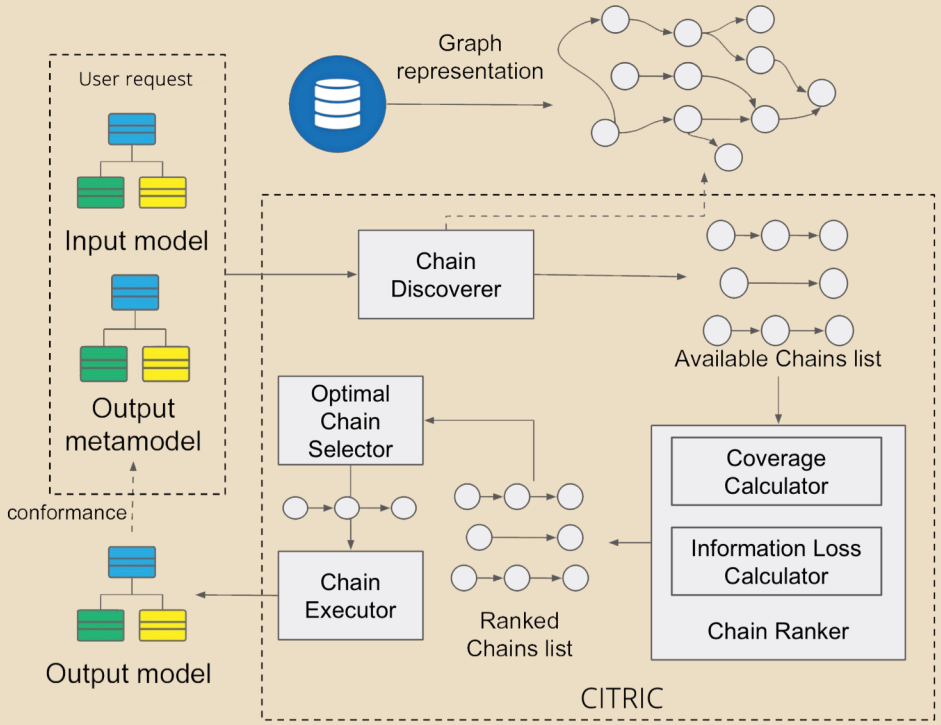

Introduction

CITRIC is able to recommend developers when multiple transformation chains are available to bridge a source model with a target metamodel. The tool makes use of well-established shortest path algorithms. In particular, the tool is able to rank model transformation chains by means of two relevant criteria that are among the most used criteria for assessing the quality of model transformations:

- Metamodel Coverage (COV) and
- Information Loss (IL)

Contacts:
Francesco Basciani: francesco.basciani@univaq.it
Mattia D'Emidio: mattia.demidio@univaq.it
Davide Di Ruscio: davide.diruscio@univaq.it
Daniele Frigioni: frigioni.daniele@univaq.it
Ludovico Iovino: ludovico.iovino@gssi.it
Alfonso Pierantonio: alfonso.pierantonio@univaq.it

CITRIC Components

Chain Ranker: consists of sub-components: i) **COV Calculator**: it correlates the number of rules that "consume" metaclasses of the source MM and the number of bindings covering structural features of the input MM; ii) **IL Calculator**: estimate the IL induced by the input model; it should increase as the number of instances (along with the owned features) conforming to metaclasses of the source MM that are not covered by the T.

The **Optimal Chain Selector**: derive the optimal solution based on the COV and IL values.

GRAN SASSO SCIENCE INSTITUTE
SCHOOL OF ADVANCED STUDIES
Scuola Universitaria Superiore

Università degli Studi Dell'Aquila

MDE Forge

Dipartimento di Ingegneria e Scienze dell'Informazione e Matematica
Università degli Studi dell'Aquila

Collaborative Creation and Versioning of Modeling Languages

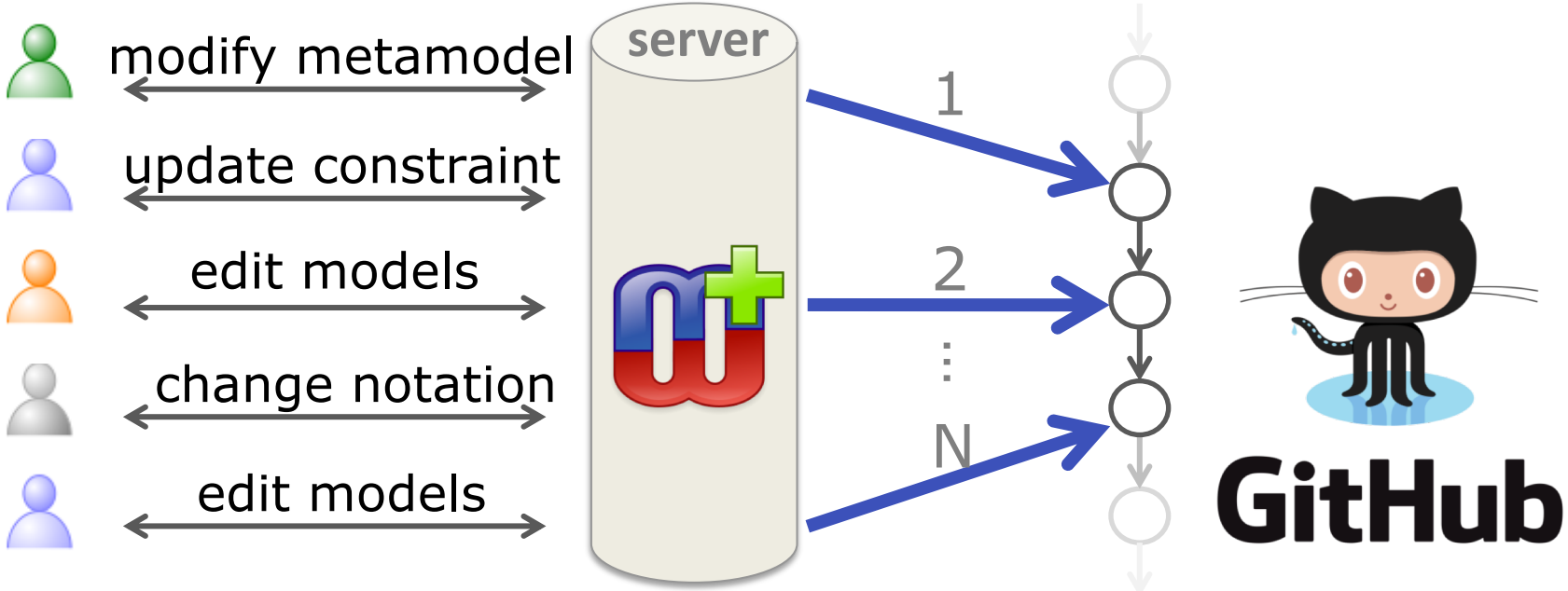

The Modular EMF Designer

The Modular EMF Designer assists modelers in graphically designing modular Ecore-based metamodels and modularizing existing complex metamodels.

Key features:

- Layering and cycle detection
- Visualization of the metamodels and their dependencies
- Move refactorings for classifiers and packages via drag and drop
- Discovery and displaying of all referenced metamodels
- Detailed information about metamodel dependencies

Benefits of modular metamodels:

- Enabling need-specific **reuse** of smaller parts of the overall metamodel
- Reduction of local complexity
- Better **understandability**, **maintainability** and **extensibility**

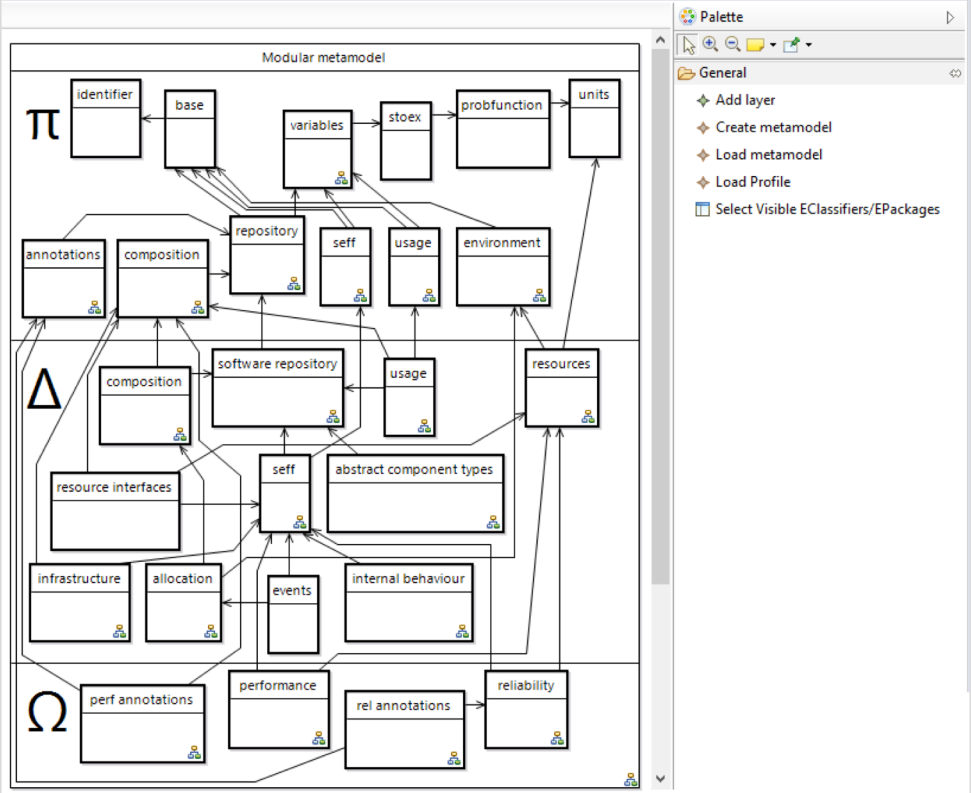

A Model-Driven Solution to support Smart Mobility Planning

Antonio Bucchiarone*, Antonio Cicchetti#
*Fondazione Bruno Kessler - FBK, Trento, Italy - bucchiarone@fbk.eu
#Mälardalen University, Västerås, Sweden - antonio.cicchetti@mdh.se

Enforcement of *City Mobility Policies*

Updates of *City Mobility Resources*

Monitoring of *City Contextual Changes*

MDE approach that targets Journey Planning as a multi-view based modelling problem.

Adaptive

Multi-modal Journey Planner able to support citizens during the whole duration of the journey

Simulink Design Documenter

Alexander Schaap, Gordon Marks, Vera Pantelic, Mark Lawford, Gehan Selim, Alan Wassyng & Lucian Patcas

McMaster University

Generate Software Design Documentation for Simulink Models

Example Model

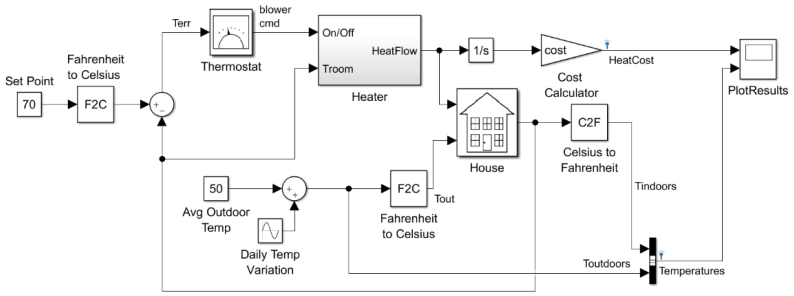

Copyright 1990-2012 The MathWorks, Inc.

1. Add/Update DocBlocks (e.g. rationale)

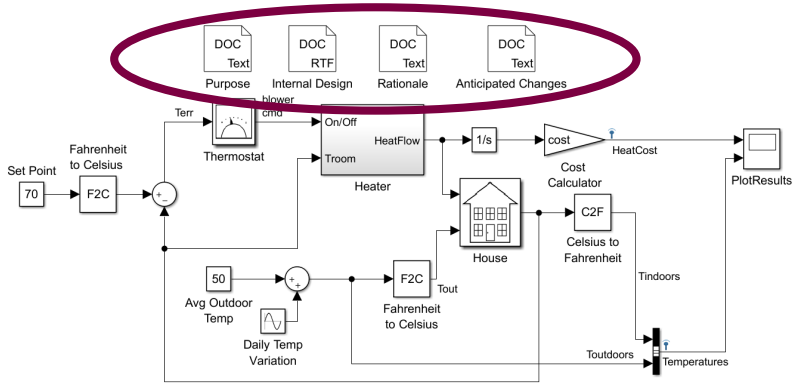

Copyright 1990-2012 The MathWorks, Inc.

2. Generate software design documentation

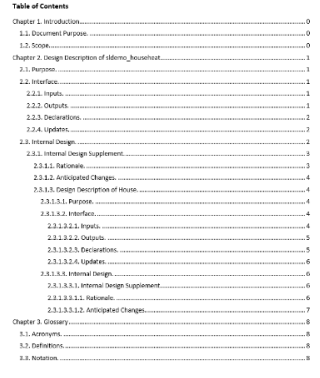

3. Repeat to update documentation

Matlab Central:

http://bit.do/sldoc

IncQuery Server

for Teamwork Cloud

Scalable Query Evaluation over Collaborative Model Repositories

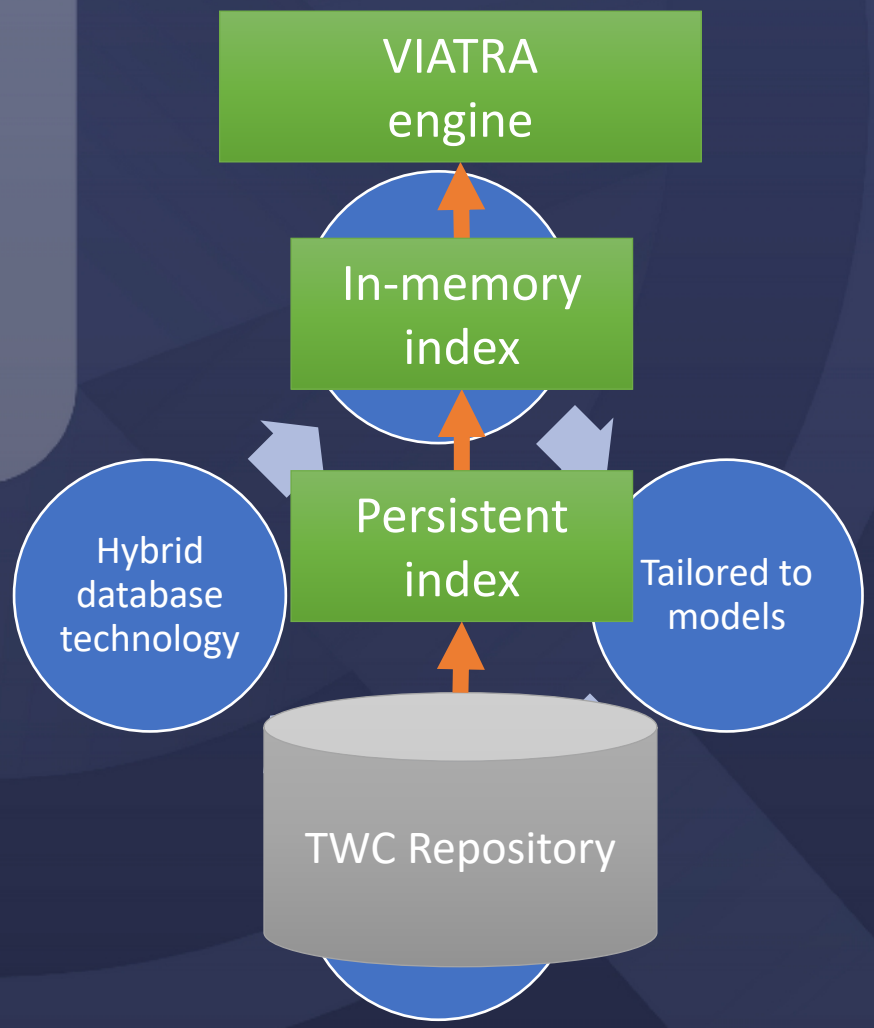

Á. Hegedüs, G. Bermann, Cs. Debreceni, Á. Horváth, P. Lunk, Á. Menyhért, I. Papp, D. Varró, **I. Ráth** (IncQuery Labs),
and T.Vileiniskis (No Magic)

Sebastian Götz: Supporting Systematic Literature Reviews in Computer Science

SLR Toolkit

File Search Window Mendeley

Bibtex Entries

MRT

type filter text

Nguyen2012
Nguyen2013
Occello2008
Olivier-Nathanaeel2012
Ouedraogo2015
Parra2011
Pasquale2011
Paucar2016
Paucar2017
Pfannemueller2017
Pickering2008
Piechnick2015
Porter2016
Provensi2009
Qureshi2010
Qureshi2010a
Qureshi2011

Bibtex Overview | mrt.bib | mrt.taxonomy

Title: **Runtime Models Based on Dynamic Decision Networks: Enhancing the Decision-making in the Domain of Ambient Assisted Living Applications**

Author: Luis Hernán Garca Paucar and Nelly Bencomo

Published: 2016

Abstract

Taxonomy

- Type of Research (272)
  - Applied (272)
    - Level of Abstraction (272)
    - Model type (272)
    - New Term
    - Rename Selected Term
    - Delete Selected Term(s)
    - Move Selected Term(s)
    - Split Selected Term
    - Fu
    - distributed-mrt (7)
    - processing (11)
- Application Domains (272)
- Research areas (272)
- Initiative (272)
- Venue (272)
- Venue Type (272)

Project Explorer

- BIM
- MRT
  - gs.bib
  - mrt.bib
  - mrt.taxonomy

ChartView

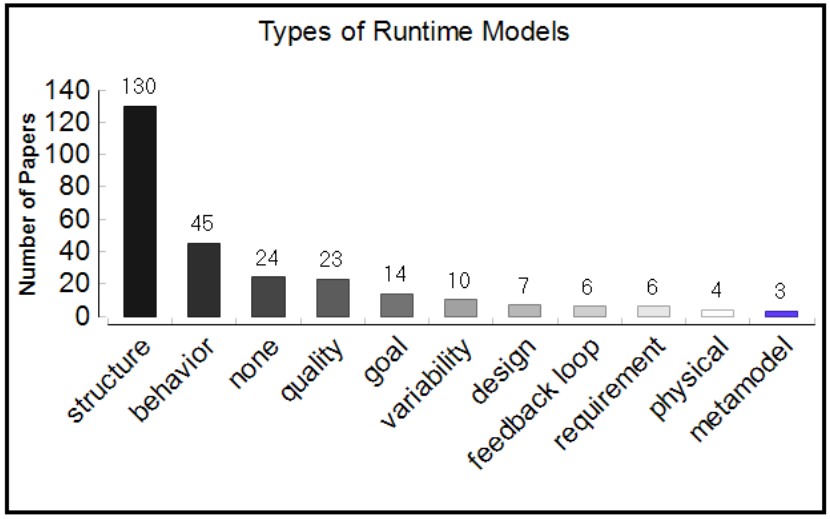

Progress

Google Scholar Import (gs.bib)

Preparing Google Scholar Session

Facilitating Simulation Generation For a Commercial Game Engine

```
Object land : Plane

Object RocketShip : Rocket {
    Action setEngineWeight (w1 : real,w2: real, w3: real, w4: real) return (){
    Action setThrust (p1 : real, p2 : real, p3 : real, p4 : real)return (){
    Action setMaxThrust (v1 : real) return (){
    Action getHeight() return (position : real){
    Action getVelocity() return (velocity : real){
    Action observeForce() return(f1 :real,f2:real,f3:real,f4:real){
}
Env simulation {
    Instance plane : land
    Instance Rocket: RocketShip
    Channel groundControl direction inout type TCP (port : 8888) assign Rocket
    Focus : Rocket :(10.0,16.0,0.0)
    Author: "Michal Pasternak"
    Purpose: "Rocket launch simulation"
}
```

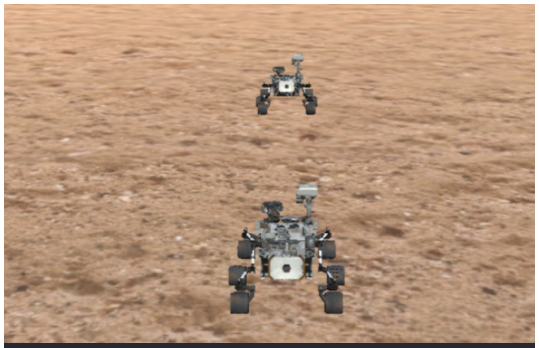

Rocket.prototype

unity

MDEOptimiser

A Search Based Model Engineering Tool

Presenter: Alexandru Burdusel

Solving optimisation problems is hard. MDEOptimiser makes it easy.

Express optimisation problems using a Domain Specific Language.

Demonstration of using MDEOptimiser to solve an acquisition problem.

https://mde-optimiser.github.io

Alexandru Burdusel
alexandru.burdusel@kcl.ac.uk

Steffen Zschaler
szschaler@acm.org

Daniel Strüber
strueber@uni-koblenz.de

KING'S College LONDON

Optimal Mapping of Task-based Computation Models over Heterogeneous Hardware using Placer

Renaud De Landtsheer, Jean-Christophe Deprez, Christophe Ponsard

TANGO H2020

- Key features:
  - Model-based design time tool with Eclipse/Sirius user interface
  - Finding the best mapping of SW onto HW using CP/VLNS techniques

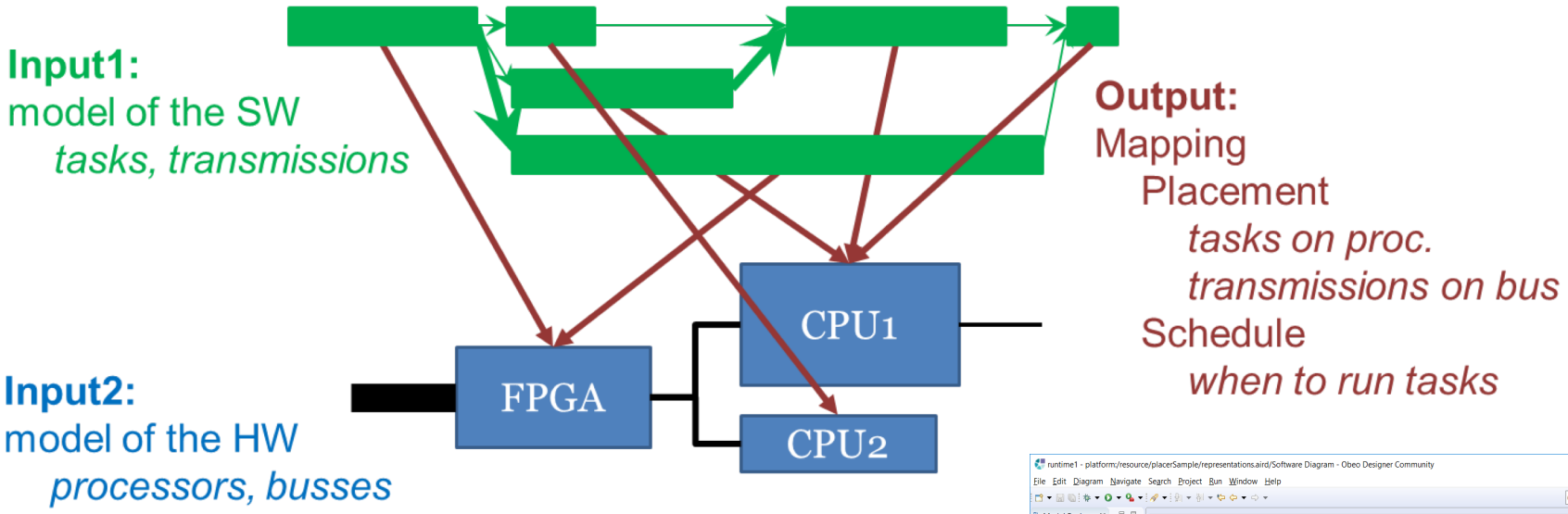
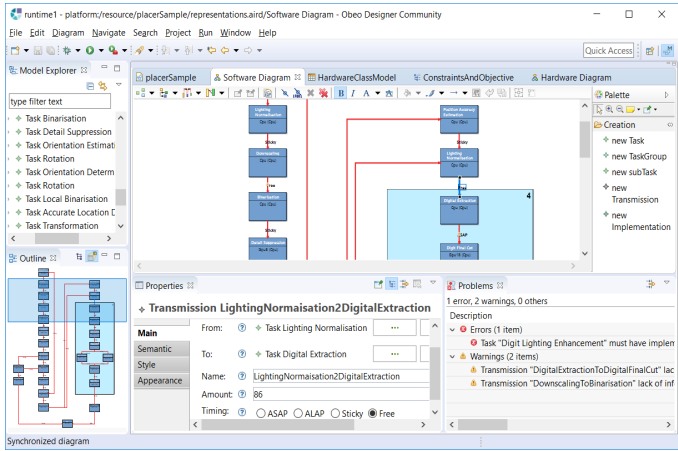
- Demo on water metering application
  - Show gain when deploying on multiple CPUs
  - Assess difference in time performance between optimal and simpler alternative schedule
  - Show (current) look & feel and on-going work