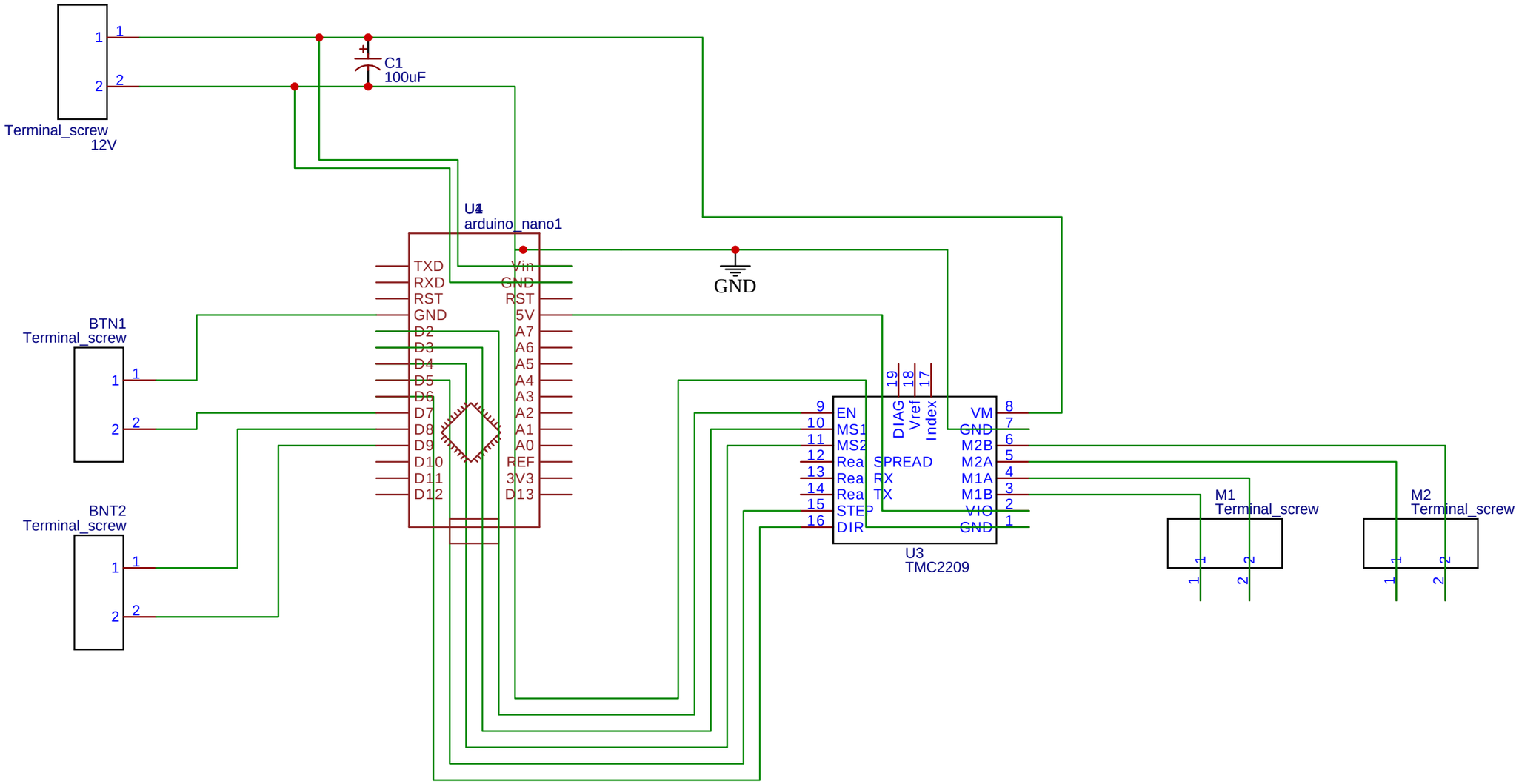

TITLE: Modern Camera Turntable		REV: 1.0
EasyEDA	Company: Modern Hobbyist	Sheet: 1/1
	Date: 2021-03-20 Drawn By: csteamengine	