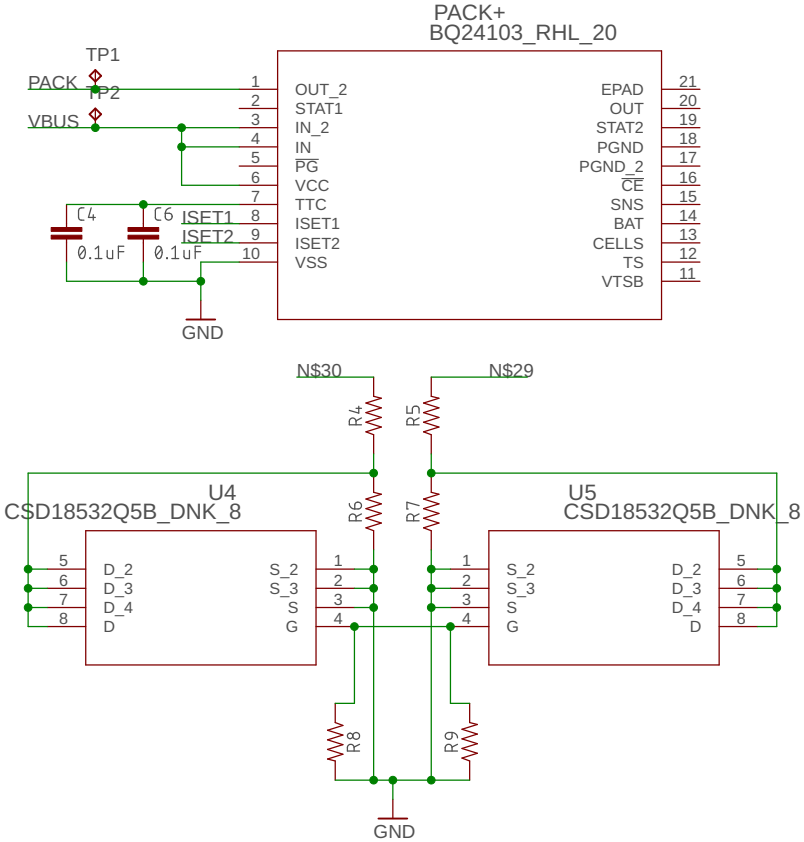
PACK+
BQ24103_RHL_20
TP1
PACK
TP2
VBUS
OUT_2
STAT1
IN_2
IN
PG
VCC
TTC
ISET1
ISET2
VSS
EPAD
OUT
STAT2
PGND
PGND_2
CE
SNS
BAT
CELLS
TS
VTSB
C4
C6
ISET1
ISET2
0.1uF
0.1uF
GND
N$30
N$29
R4
R5
R6
R7
U4
CSD18532Q5B_DNK_8
U5
CSD18532Q5B_DNK_8
D_2
D_3
D_4
D
S_2
S_3
S
G
R8
R9
GND