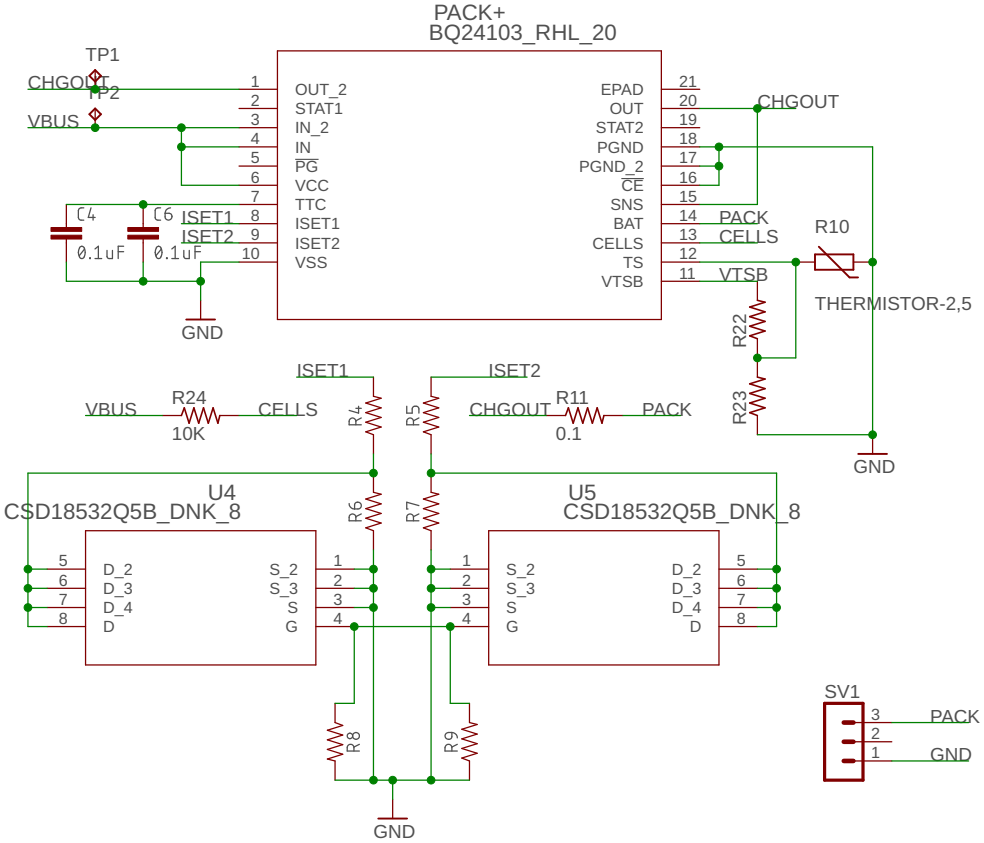
PACK+
BQ24103_RHL_20
TP1
CHGOUT
TP2
VBUS
OUT_2
STAT1
IN_2
IN
PG
VCC
TTC
ISET1
ISET2
VSS
EPAD
OUT
STAT2
PGND
PGND_2
CE
SNS
BAT
CELLS
TS
VTSB
CHGOUT
PACK
CELLS
VTSB
C4
0.1uF
C6
0.1uF
ISET1
ISET2
GND
R10
THERMISTOR-2,5
R22
R23
GND
ISET1
ISET2
VBUS
R24
10K
CELLS
R4
R5
CHGOUT
R11
0.1
PACK
U4
CSD18532Q5B_DNK_8
U5
CSD18532Q5B_DNK_8
R6
R7
D_2
D_3
D_4
D
S_2
S_3
S
G
R8
R9
GND
SV1
PACK
GND