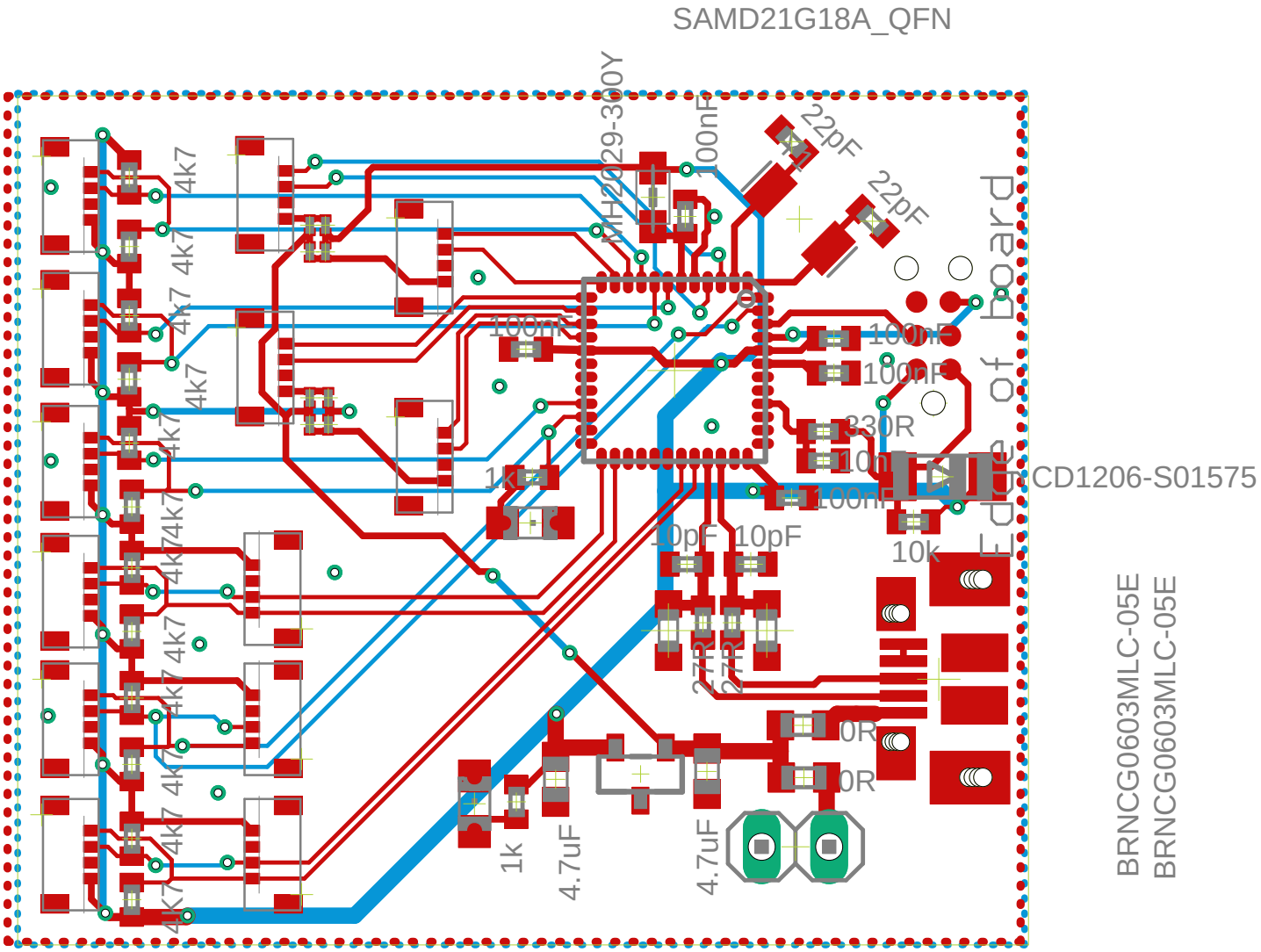
SAMD21G18A_QFN
MH2029-300Y
100nF
22pF
22pF
4k7
4k7
4k7
4k7
4k7
4k7
4k7
4k7
4k7
4k7
4k7
4k7
4k7
4k7
100nF
1k
100nF
100nF
330R
100nF
100nF
10pF
10pF
27R
27R
10k
0R
0R
1k
4.7uF
4.7uF
CD1206-S01575
BRNCG0603MLC-05E
BRNCG0603MLC-05E