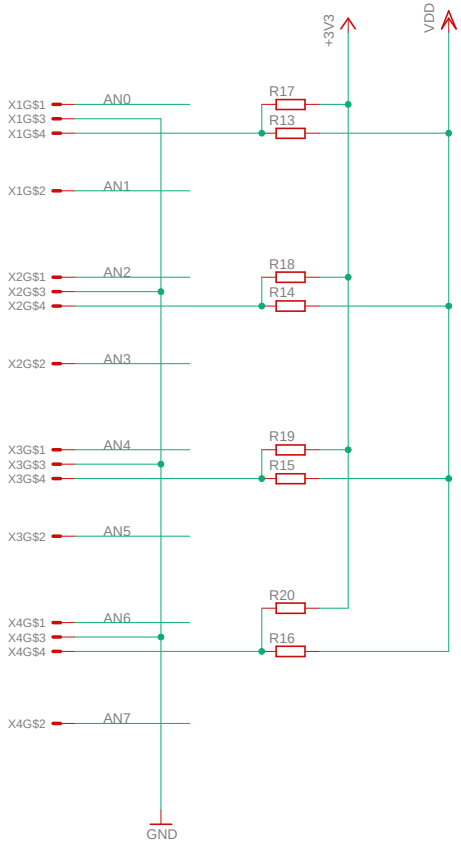
+3V3
VDD
X1G$1
X1G$3
X1G$4
AN0
R17
R13
X1G$2
AN1
X2G$1
X2G$3
X2G$4
AN2
R18
R14
X2G$2
AN3
X3G$1
X3G$3
X3G$4
AN4
R19
R15
X3G$2
AN5
X4G$1
X4G$3
X4G$4
AN6
R20
R16
X4G$2
AN7
GND

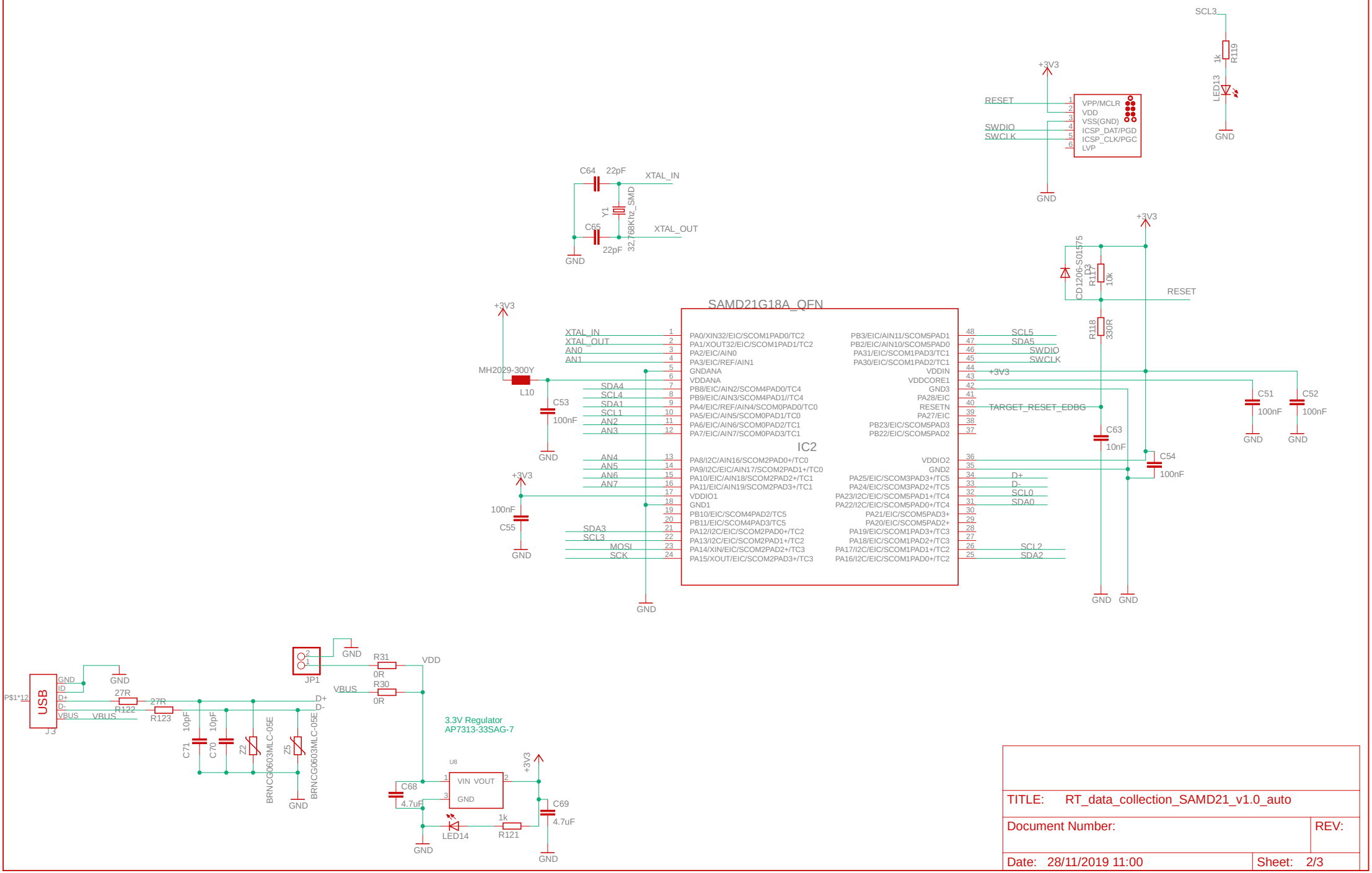

TITLE: RT_data_collection_SAMD21_v1.0_auto	
Document Number:	REV:
Date: 28/11/2019 11:00	Sheet: 2/3

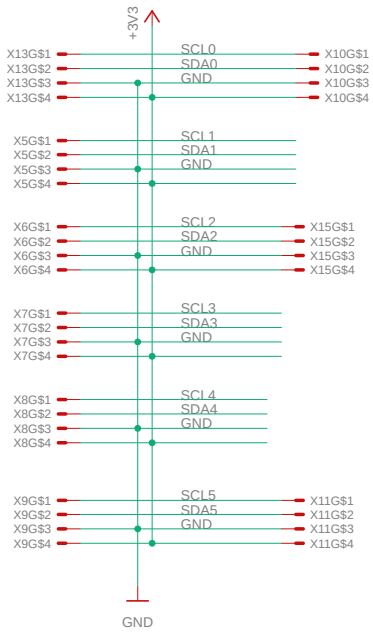
+3V3
X13G$1
X13G$2
X13G$3
X13G$4
SCL0
SDA0
GND
X10G$1
X10G$2
X10G$3
X10G$4
X5G$1
X5G$2
X5G$3
X5G$4
SCL1
SDA1
GND
X6G$1
X6G$2
X6G$3
X6G$4
SCL2
SDA2
GND
X15G$1
X15G$2
X15G$3
X15G$4
X7G$1
X7G$2
X7G$3
X7G$4
SCL3
SDA3
GND
X8G$1
X8G$2
X8G$3
X8G$4
SCL4
SDA4
GND
X9G$1
X9G$2
X9G$3
X9G$4
SCL5
SDA5
GND
X11G$1
X11G$2
X11G$3
X11G$4
GND

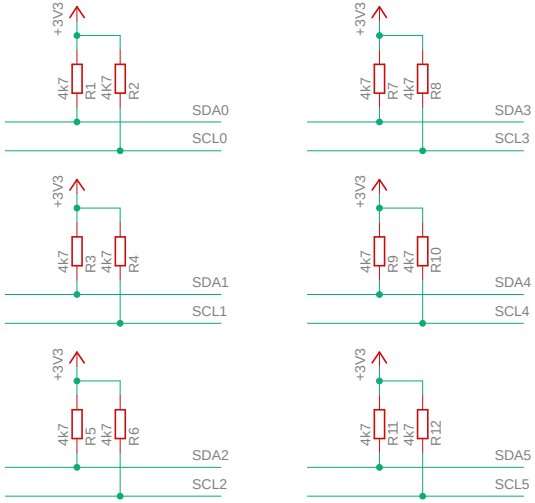
+3V3
4k7
R1
4k7
R2
SDA0
SCL0
+3V3
4k7
R7
4k7
R8
SDA3
SCL3
+3V3
4k7
R3
4k7
R4
SDA1
SCL1
+3V3
4k7
R9
4k7
R10
SDA4
SCL4
+3V3
4k7
R5
4k7
R6
SDA2
SCL2
+3V3
4k7
R11
4k7
R12
SDA5
SCL5