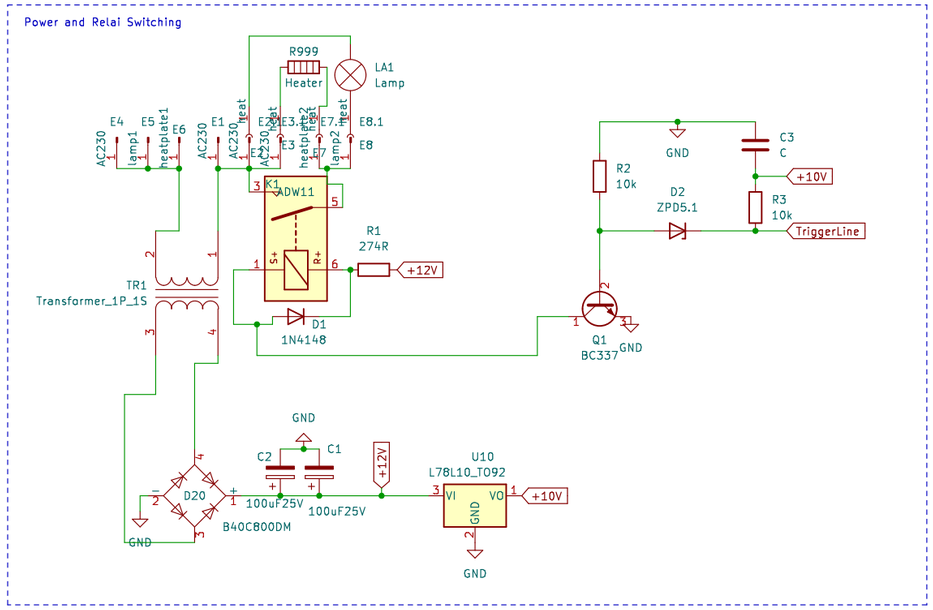
Power and Relai Switching
R999
Heater
LA1
Lamp
E4
E5
E6
E1
E2
E3
E7
E8.1
E8
AC230
lamp1
heatplate1
heat
heatplate2
lamp2
ADW11
K1
S+
R+
R1
274R
+12V
D1
1N4148
TR1
Transformer_1P_1S
D20
B40C800DM
C2
C1
100uF25V
U10
L78L10_TO92
VI
VO
GND
+10V
R2
10k
D2
ZPD5.1
C3
C
R3
10k
TriggerLine
Q1
BC337

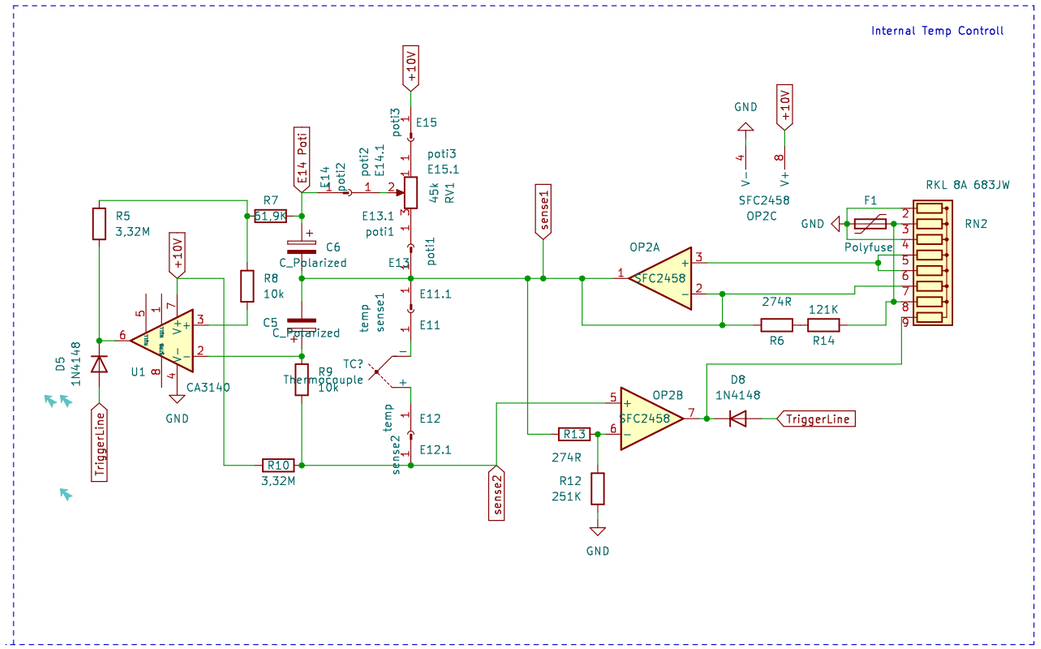
Internal Temp Controll
+10V
poti3
E15
poti3
E15.1
45k
RV1
E14 Poti
E14
poti2
E14.1
E13.1
poti1
R7
51.9k
C6
C_Polarized
R8
10k
C5
C_Polarized
R5
3.32M
D5
1N4148
TriggerLine
U1
CA3140
GND
E13
E11.1
E11
temp
sense1
TC?
Thermocouple
R9
10k
E12
E12.1
temp
sense2
R10
3.32M
sense1
sense2
OP2A
SFC2458
OP2B
SFC2458
R13
274R
R12
251K
V−
V+
SFC2458
OP2C
F1
Polyfuse
RKL 8A 683JW
RN2
274R
R6
121K
R14
D8
1N4148

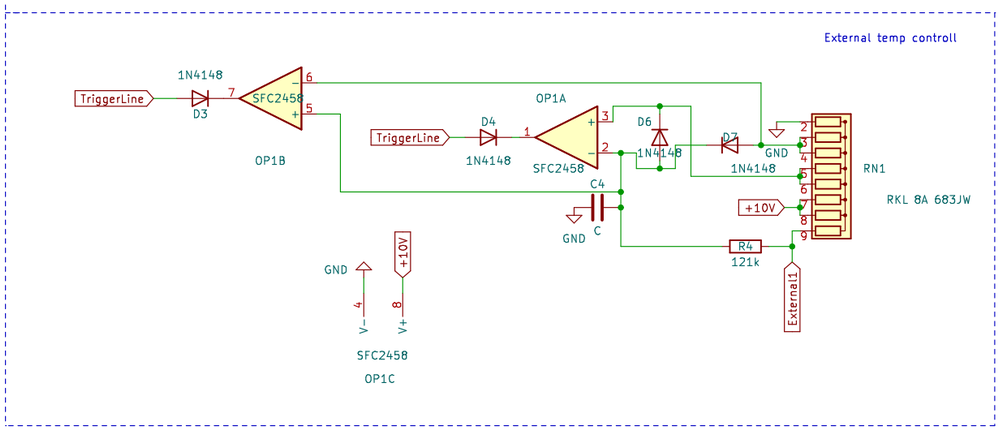
External temp controll
TriggerLine
1N4148
D3
SFC2458
OP1B
D4
1N4148
OP1A
SFC2458
D6
1N4148
D7
1N4148
GND
C4
C
RN1
RKL 8A 683JW
+10V
R4
121k
External1
V−
V+
SFC2458
OP1C

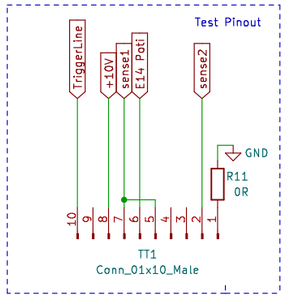
Test Pinout
TriggerLine
+10V
sense1
E14 Poti
sense2
GND
R11
0R
TT1
Conn_01x10_Male

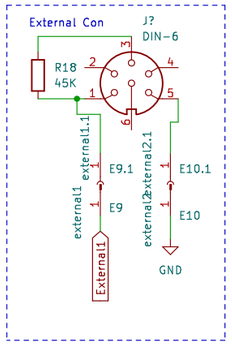
External Con
J?
DIN-6
R18
45K
external1.1
E9.1
E9
external2.1
E10.1
E10
External1
GND