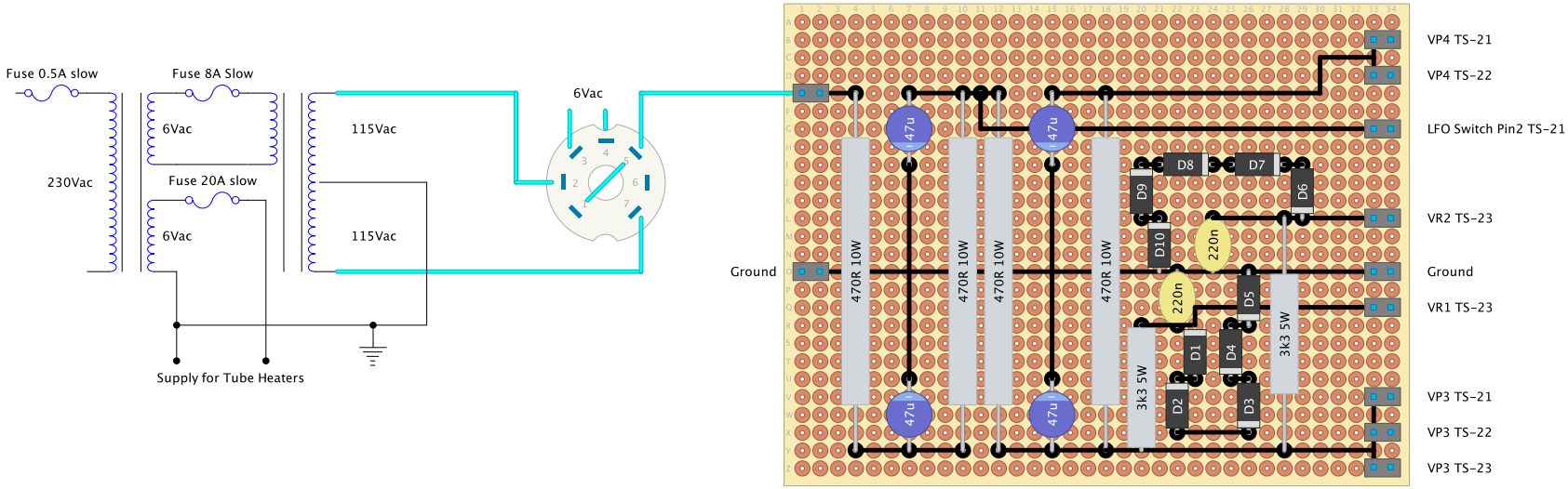
Fuse 0.5A slow
Fuse 8A Slow
6Vac
230Vac
Fuse 20A slow
6Vac
115Vac
115Vac
Supply for Tube Heaters
6Vac
Ground
470R 10W
470R 10W
470R 10W
470R 10W
47u
47u
47u
47u
D9
D8
D7
D6
D10
220n
220n
D5
D1
D4
D2
D3
3k3 5W
3k3 5W
VP4 TS-21
VP4 TS-22
LFO Switch Pin2 TS-21
VR2 TS-23
Ground
VR1 TS-23
VP3 TS-21
VP3 TS-22
VP3 TS-23