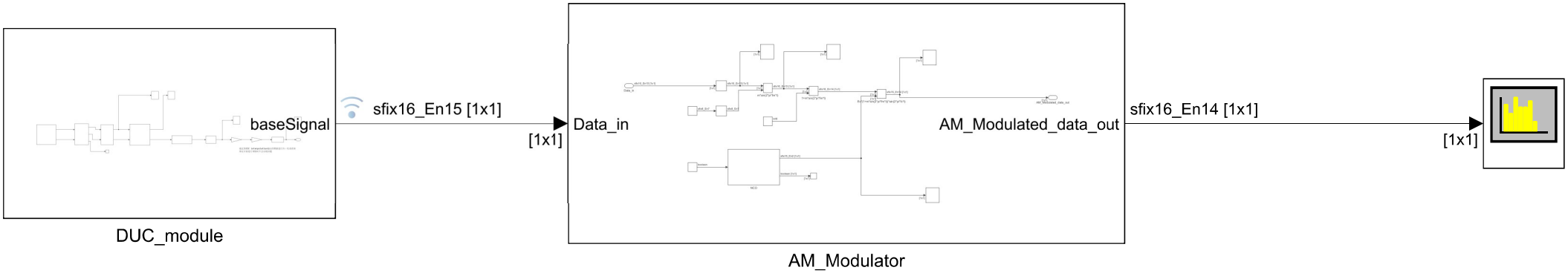
baseSignal
DUC_module
sfix16_En15 [1x1]
[1x1]
Data_in
AM_Modulated_data_out
AM_Modulator
sfix16_En14 [1x1]
[1x1]

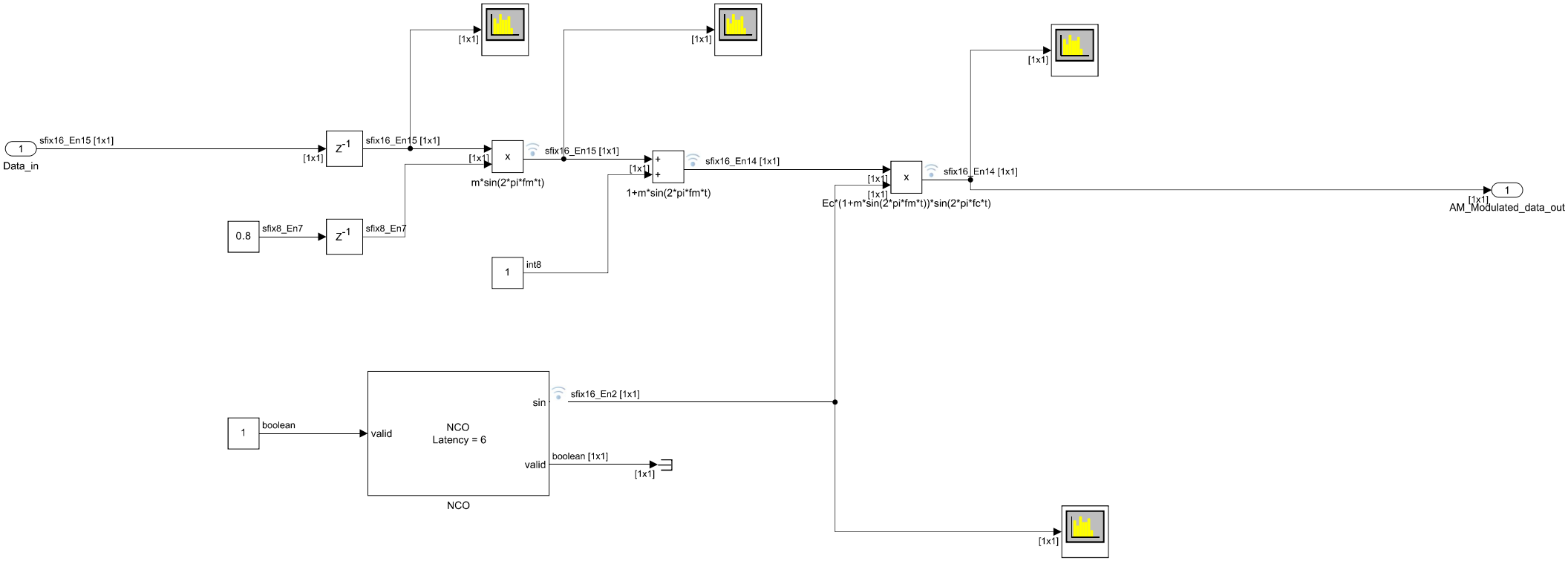
1
Data_in
sfix16_En15 [1x1]
[1x1]
z-1
sfix16_En15 [1x1]
[1x1]
[1x1]
x
m*sin(2*pi*fm*t)
sfix16_En15 [1x1]
[1x1]
[1x1]
+
+
1+m*sin(2*pi*fm*t)
sfix16_En14 [1x1]
[1x1]
[1x1]
x
Ec*(1+m*sin(2*pi*fm*t))*sin(2*pi*fc*t)
sfix16_En14 [1x1]
[1x1]
[1x1]
1
AM_Modulated_data_out
0.8
sfix8_En7
z-1
sfix8_En7
1
int8
1
boolean
valid
NCO
Latency = 6
sin
valid
sfix16_En2 [1x1]
boolean [1x1]
[1x1]
NCO
[1x1]

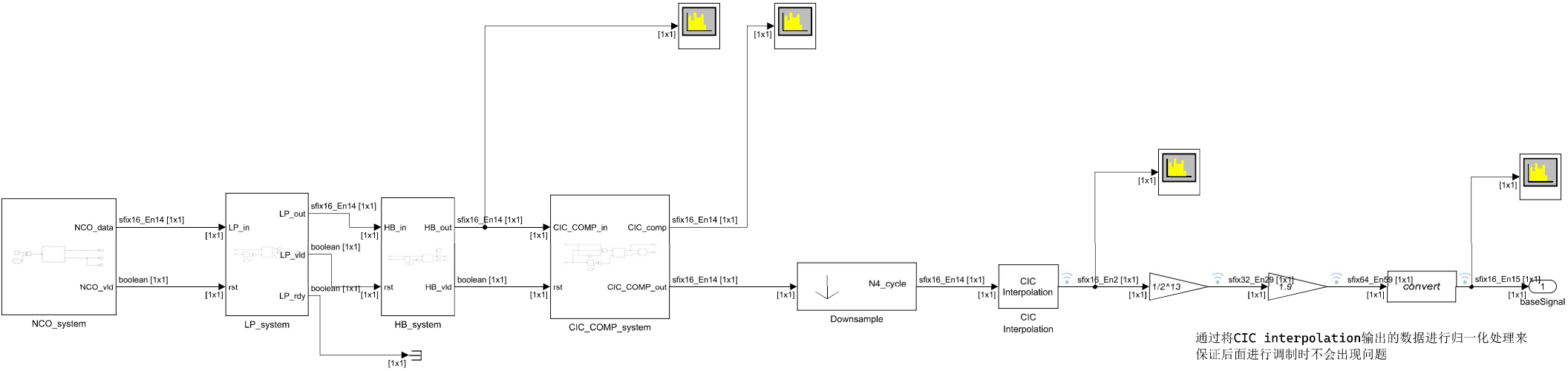

通过将CIC interpolation输出的数据进行归一化处理来保证后面进行调制时不会出现问题

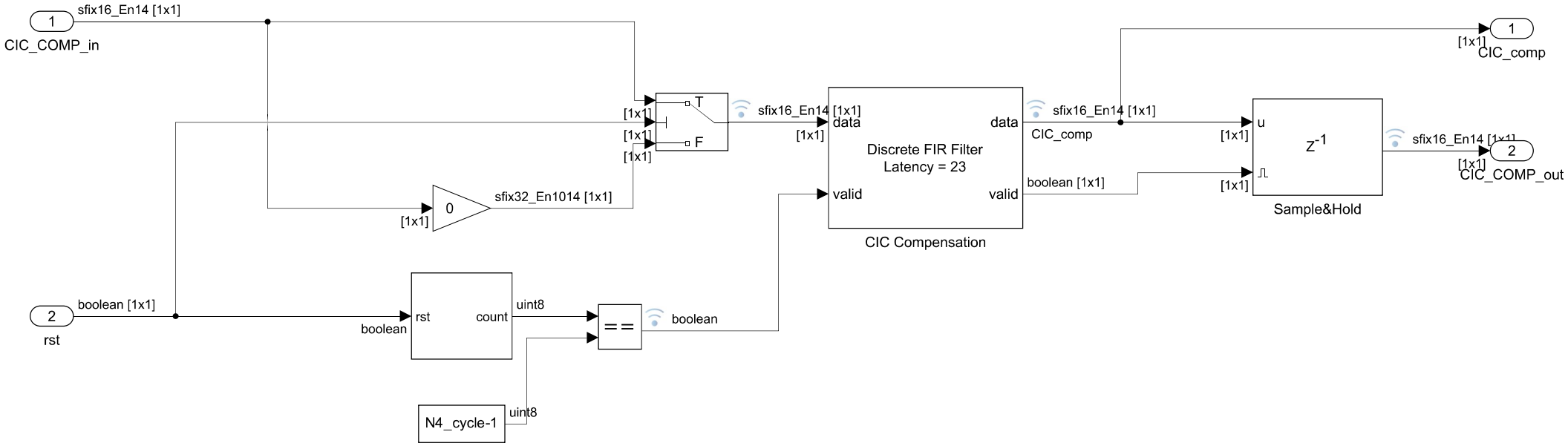
1
sfix16_En14 [1x1]
CIC_COMP_in
2
boolean [1x1]
rst
T
F
[1x1]
[1x1]
[1x1]
0
[1x1]
sfix32_En1014 [1x1]
rst
boolean
count
uint8
==
boolean
N4_cycle-1
uint8
sfix16_En14 [1x1]
data
[1x1]
valid
Discrete FIR Filter
Latency = 23
data
valid
CIC Compensation
sfix16_En14 [1x1]
CIC_comp
boolean [1x1]
u
[1x1]
[1x1]
z-1
Sample&Hold
1
[1x1]
CIC_comp
sfix16_En14 [1x1]
2
[1x1]
CIC_COMP_out

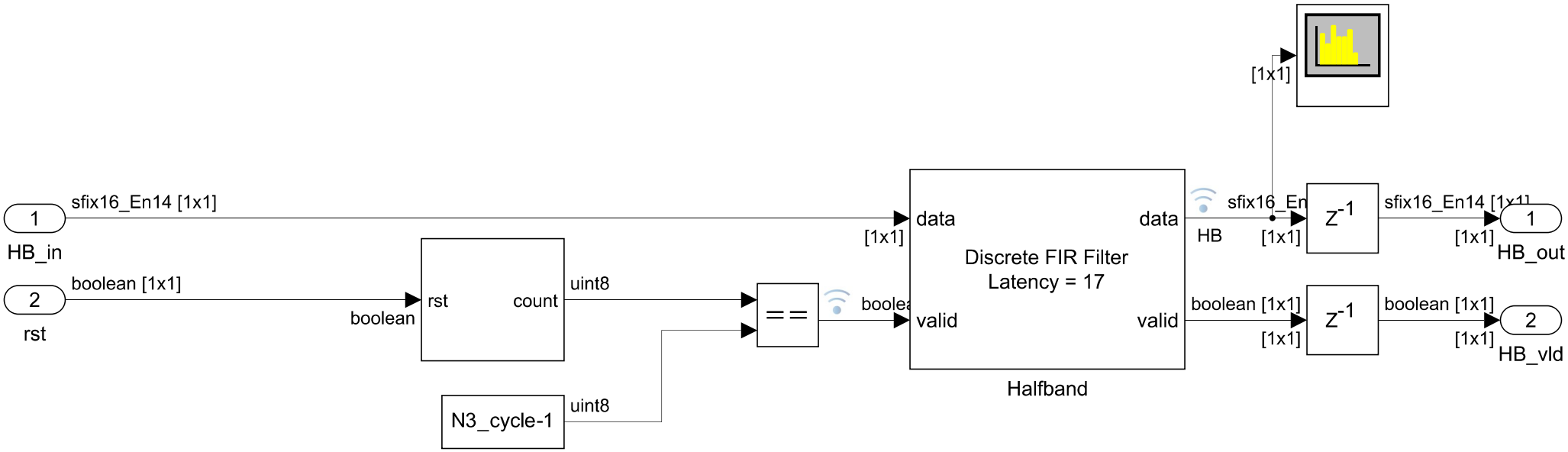
1
HB_in
sfix16_En14 [1x1]
2
rst
boolean [1x1]
boolean
rst
count
uint8
N3_cycle-1
uint8
==
boolea
[1x1]
data
valid
Discrete FIR Filter
Latency = 17
data
valid
Halfband
HB
sfix16_En
[1x1]
[1x1]
boolean [1x1]
[1x1]
Z-1
Z-1
sfix16_En14 [1x1]
[1x1]
1
HB_out
boolean [1x1]
[1x1]
2
HB_vld

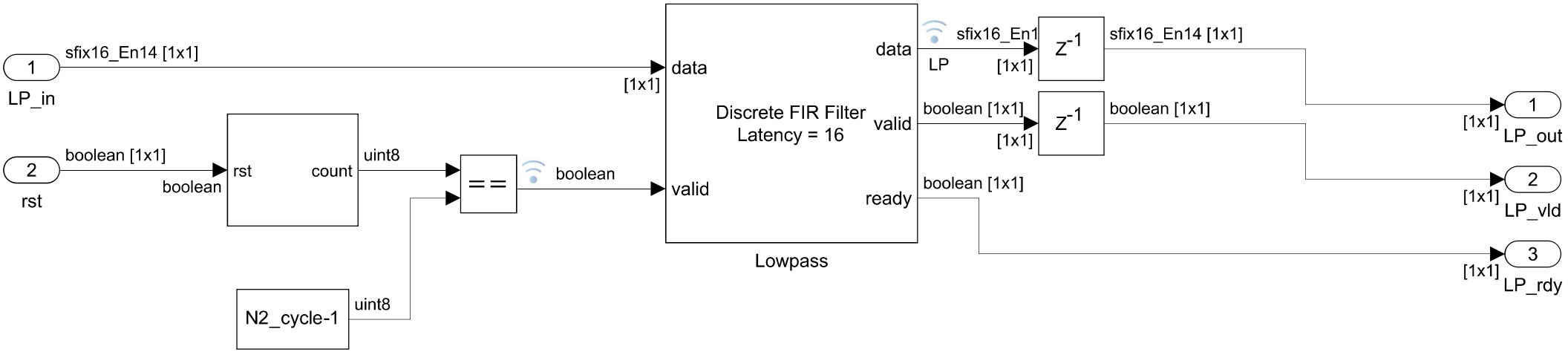
1
LP_in
sfix16_En14 [1x1]
2
rst
boolean [1x1]
boolean
rst
count
uint8
N2_cycle-1
uint8
==
boolean
data
[1x1]
valid
Discrete FIR Filter
Latency = 16
data
valid
ready
Lowpass
sfix16_En1
LP
[1x1]
boolean [1x1]
[1x1]
boolean [1x1]
Z-1
Z-1
sfix16_En14 [1x1]
boolean [1x1]
1
[1x1]
LP_out
2
[1x1]
LP_vld
3
[1x1]
LP_rdy

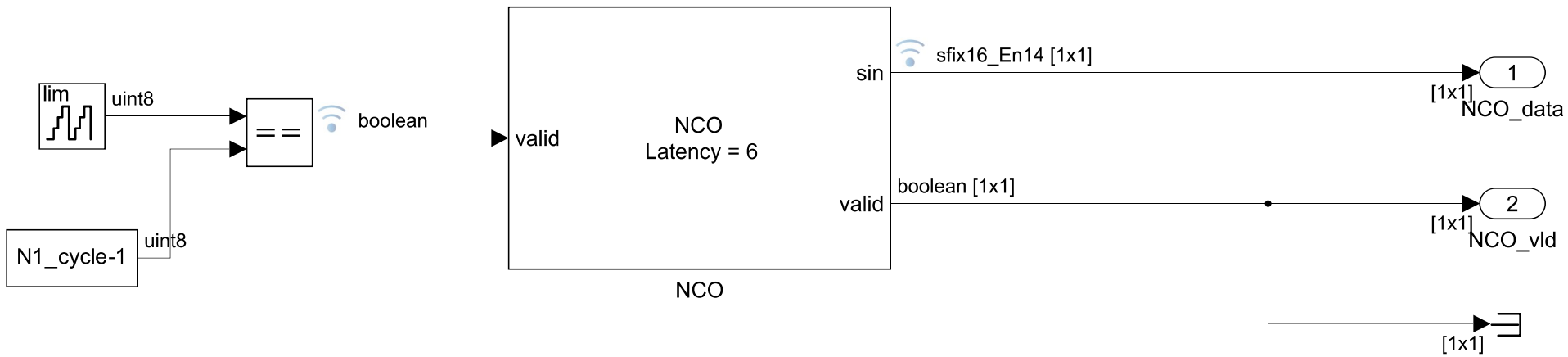
lim
uint8
==
boolean
N1_cycle-1
uint8
valid
NCO
Latency = 6
sin
valid
NCO
sfix16_En14 [1x1]
boolean [1x1]
1
[1x1]
NCO_data
2
[1x1]
NCO_vld
[1x1]