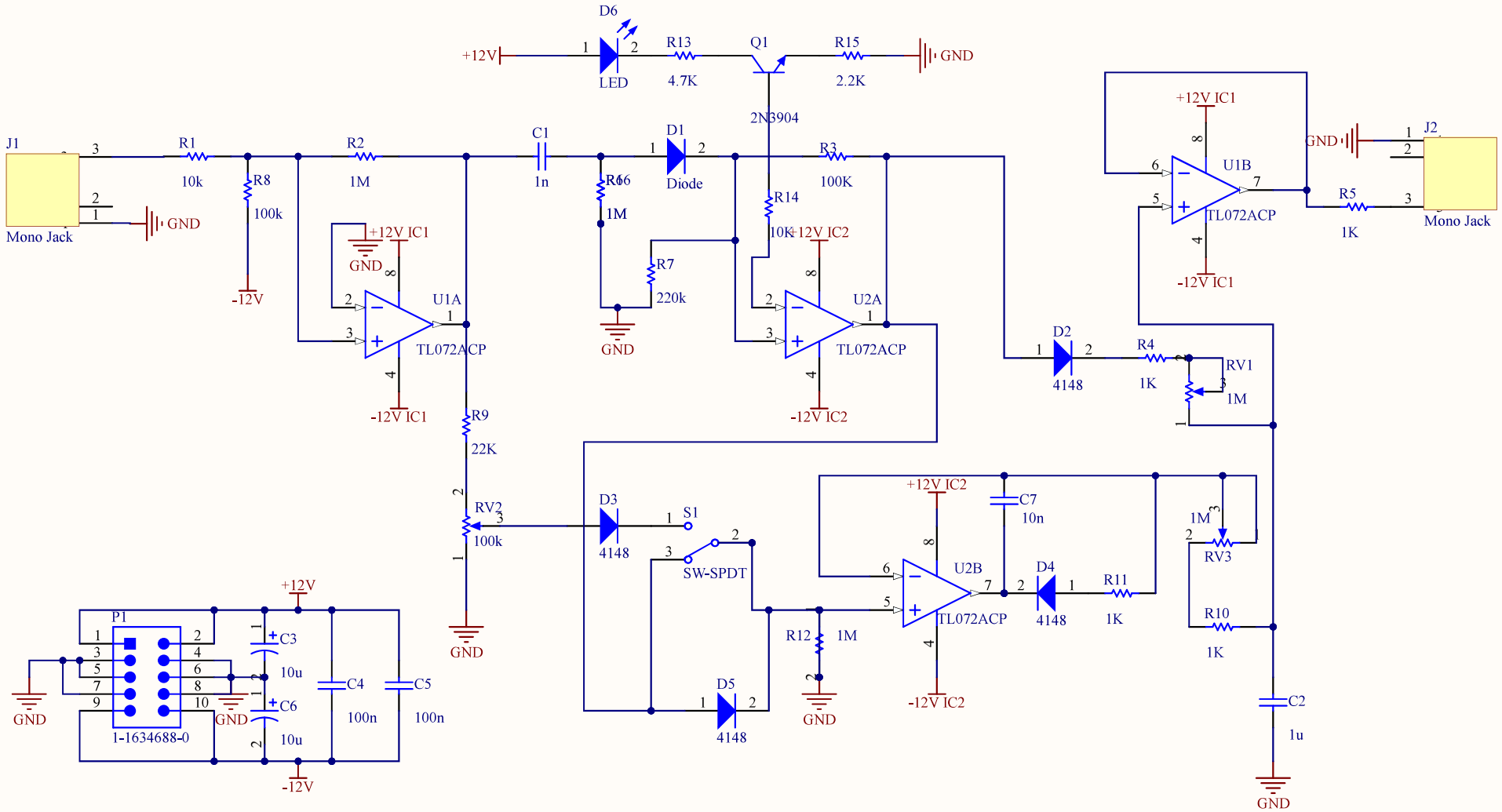

Title		
Size A	Number	Revision
Date: 10/18/2020		Sheet of
File: C:\Users\..\ADSR Schematic.SchDoc		Drawn By: