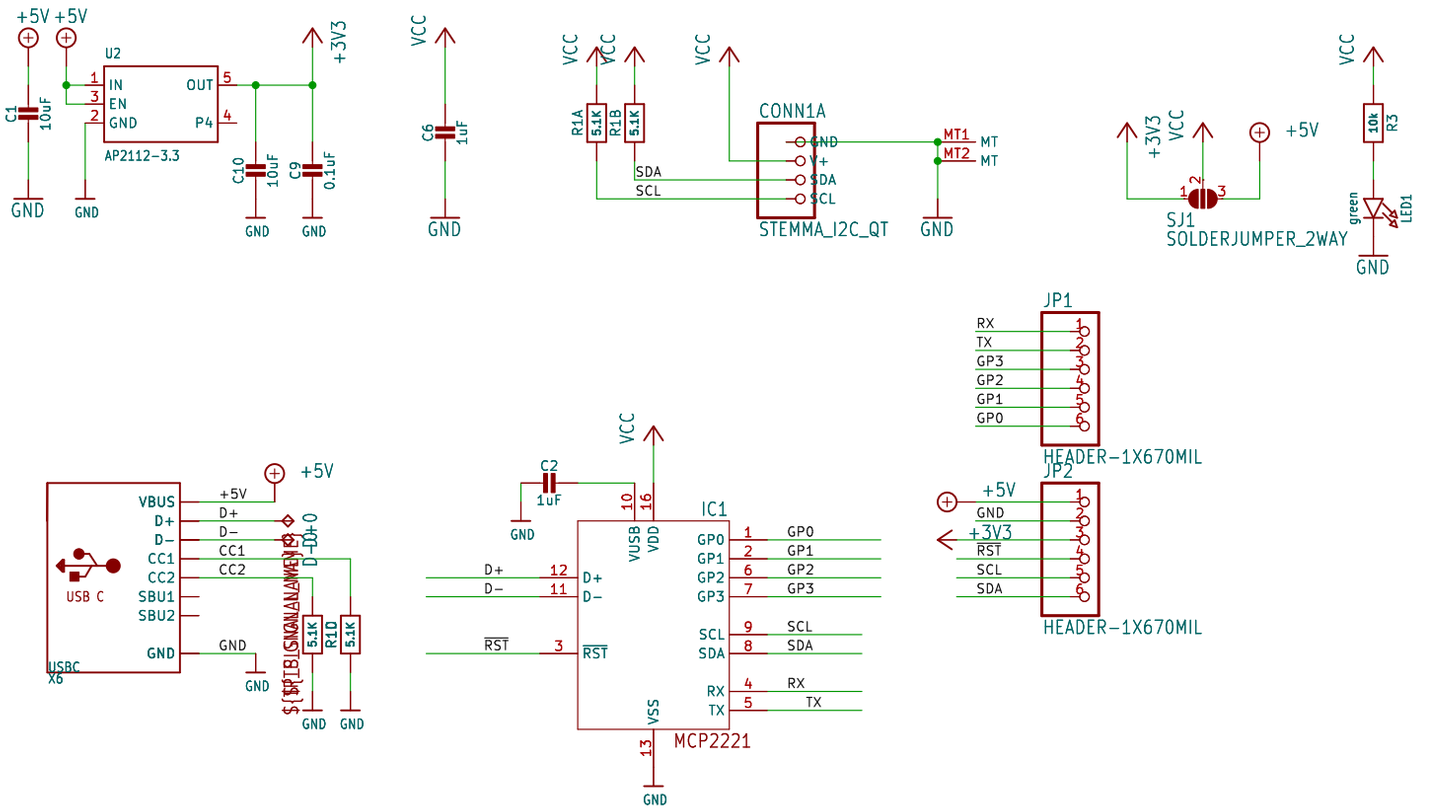

ISSUE		© ${YEAR}
DRAWN ${DRAWN}	TITLE	REV ${REV}
CHECKED ${CHECKED}	DATE 2025-03-30	DRG № ${DRGNO}
DATE ${DATE}	FILE: Adafruit MCP2221	PAGE: 1/1