Codec-Guided Second-Order Propagation for Video Super-Resolution

Mohamed Shakir*[1]

[1]University of Ottawa

Abstract

Video super-resolution (VSR) in practical streaming pipelines must contend with compression artifacts. Modern codecs (e.g., H.264/HEVC) expose rich side information such as motion vectors (MVs), but mainstream VSR systems largely ignore these signals and instead rely on costly learned motion estimation. We propose a codec-guided VSR framework that leverages codec priors as control signals for the network's architecture. Our model is built on a bidirectional recurrent backbone that uses the native forward and backward codec MVs as alignment priors. To address the lack of backward motion vectors in P-frames and exploit more temporal information, we introduce a Second-Order Propagation mechanism that chains motion vectors to bridge temporal gaps. The code and pretrained models are made available : https://github.com/mohamedshakir3/mv-flow-vsr

Keywords— video super-resolution, video codecs, motion estimation, temporal modeling, deep learning

1 Introduction

Recent VSR systems [1, 2, 3] deliver strong quality but often rely on heavy motion estimation or deformable alignment. In many production scenarios, however, the video codec exposes block motion vectors (MVs) available during decoding. Our goal is to use codec MVs as alignment priors and recover the accuracy gap with a small refinement module compared to existing flow estimation networks.

Our approach leverages codec-exposed block motion vectors as alignment priors, refined with a lightweight residual flow network. Crucially, we solve the missing bidirectional motion vectors problem inherent in H.264 P-frames by implementing Second-Order Propagation. This allows the network to look past occluded frames by warping and summing motion vectors across multiple timesteps. The resulting model is compact, memory-efficient, and trainable on a single GPU.

*mshak084@uottawa.ca

2 Related Work

2.1 Flow Based Video Super Resolution

A large family of VSR methods performs *explicit motion estimation* between adjacent frames and uses the estimated optical flow to temporally align inputs or propagated features before reconstruction. The classic formulation is two-stage: (i) estimate flow between frame pairs; (ii) warp and fuse aligned evidence into the target time step.

Xue *et al.* [4] propose TOFlow, a *task-oriented* flow network trained *jointly* with the end task (denoising, interpolation, super-resolution). In this paradigm, flow acts as a learnable, task-specific alignment module. The loss on the final restored output shapes the flow so that it best serves the reconstruction objective, even if the resulting motion fields deviate from "true" optical flow.

Chan *et al.* [1] use a recurrent framework that performs bidirectional propagation. Features are propagated backward and forward through the sequence using flows predicted by a pretrained flow estimation network (SPyNet [5]) and warped with differentiable sampling. BasicVSR++ [2] improves alignment quality by introducing second-order propagation and *flow-guided deformable alignment*, which uses optical flow as a coarse prior and then refines sampling offsets with deformable convolutions around flow-indicated locations.

2.2 Compressed Video Super Resolution

Another direction in VSR research focuses on handling compressed video inputs directly, where heavy quantization and block artifacts degrade temporal consistency and fine details. Instead of assuming clean low-resolution frames, these methods exploit information from the compression process or learn to restore details conditioned on compression artifacts.

Li *et al.* [6] introduce *COMISR*, a compression-informed VSR model that learns across varying compression levels. The network does not explicitly use codec metadata such as motion vectors or quantization parameters; rather, it is trained on multiple compression settings (e.g., different CRF values) so that the learned features implicitly model compression-induced distortions. COMISR demonstrates improved performance and generalization to unseen compression levels but relies purely on learned restoration without leveraging codec-side priors.

Wang *et al.* [7] propose *Compression-Aware Video Super-*

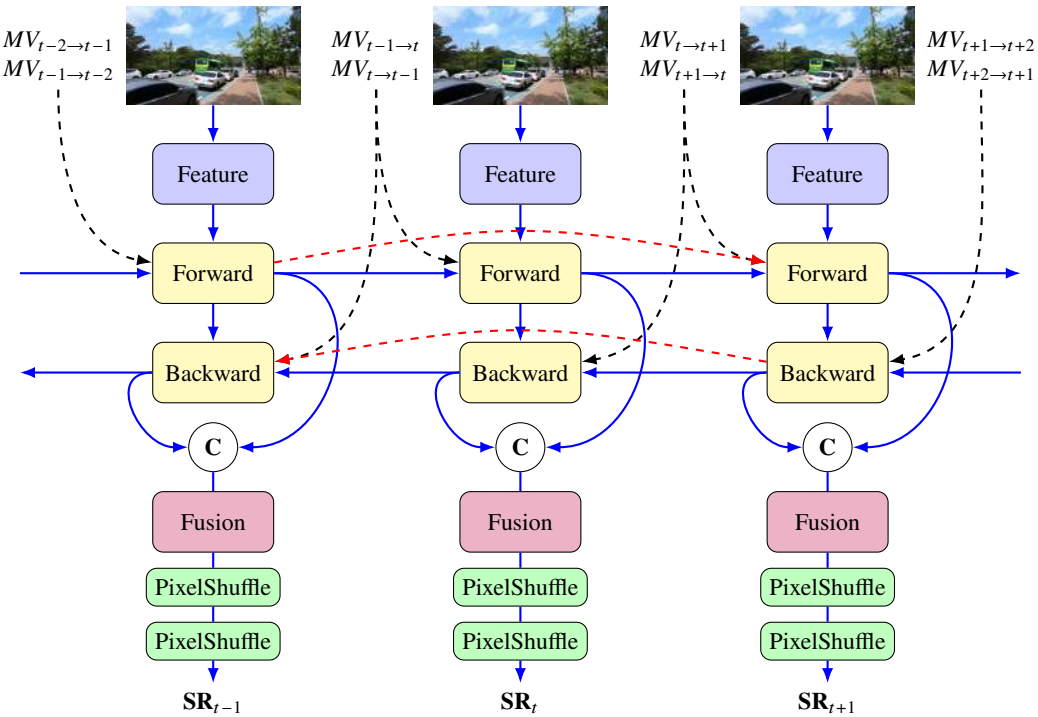

Figure 1: Bidirectional propagation ($t-1 \leftrightarrow t+1$) aligns features using cleaned and chained Codec MVs. Used second order propagation to propagate temporal information further.

Resolution (CAVSR), which explicitly models compression effects through a learned compression representation. Their approach augments a recurrent backbone with a dedicated encoder that extracts features sensitive to compression artifacts and integrates them into the restoration pipeline.

In contrast, our approach explores using codec-exposed information, specifically motion vectors (MVs), as explicit priors to guide alignment and propagation. Rather than learning to infer motion or compression cues implicitly, we leverage signals already computed by the encoder or decoder, offering an efficient, physically grounded alternative that avoids redundant estimation and heavy auxiliary networks.

3 Method

3.1 Data and Motion Vector Extraction

We operate on the REDS [8] dataset, encoding each high-resolution (HR) sequence with H264 using a long B-frame structure to obtain compressed low-resolution (LR) inputs. From each encoded stream, we extract block motion vectors (MVs) using ffmpeg. The block-wise vectors are rasterized into dense backward flow fields $\mathbf{F}_t \in \mathbb{R}^{H\times W\times 2}$ representing pixel displacements from frame t to $t-1$. These codec-exposed flows serve as initialization for alignment, providing motion priors without the cost of running a learned optical-flow network.

3.2 Network Overview

Our model follows a recurrent feature-propagation design, as illustrated in fig. 1. Let ϕ_t denote the extracted LR features at time t, S_t the propagated temporal state, and $\mathbf{F}_t$ the codec-derived backward motion field from frame t to $t-1$. The network processes each clip sequentially in the following stages:

1. **Feature Extraction:** A shallow residual backbone (15 blocks, 64 channels) encodes each LR frame into feature maps ϕ_t.
2. **MV Refining and Alignment:** Instead of estimating optical flow from scratch, we utilize the extracted codec motion vectors $\mathbf{F}_t$. A lightweight network (2-layer CNN) refines these quantized block vectors into a smooth dense flow field $\hat{\mathbf{F}}_t$. The temporal state S_{t-1} is then aligned to the current frame using $\hat{\mathbf{F}}_t$ via differentiable grid sampling.
3. **Second-Order Propagation:** H.264 P-frames only contain forward references, causing the backward propagation branch to fail due to missing future motion info. To resolve this, we implement Second-Order Propagation. When $MV_{t\to t+1}$ is unavailable, we chain the motion vectors from $t \to t+1$ and $t+1 \to t+2$. We warp the second vector using the first to align it to the current grid, then sum them to form a valid propagation path spanning two time steps. This bridges the temporal gap caused by P-frames and improves performance across B-frames.
4. **Upsampling and Reconstruction:** Two PixelShuffle×2 stages followed by a final 3×3 convolution progressively reconstruct the HR frame $\hat{\mathbf{Y}}_t$.

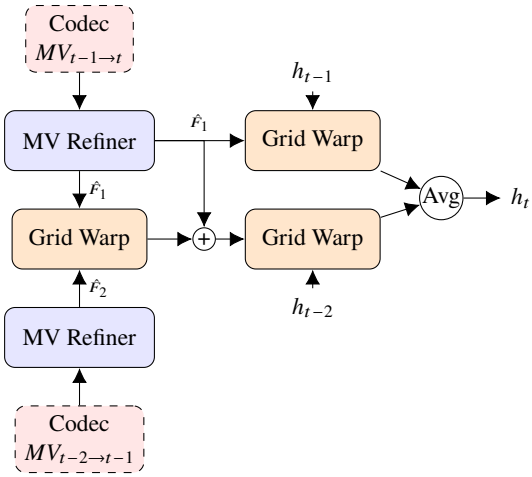

Figure 2: Second-Order Warping and Chaining logic. To skip the P-frame gap and propagate estimate second order motion, we chain flows: $\hat{F}_{chain} = \hat{F}_1 + \mathcal{W}(\hat{F}_2, \hat{F}_1)$ where $\mathcal{W}$ is the grid warp. This allows h_{t-2} to be warped directly to time t.

3.3 Training Objective

We train the model end-to-end using the Charbonnier loss [9], a differentiable variant of the L_1 loss widely used in video restoration and optical-flow tasks. The loss is computed over entire sequences:

$$\mathcal{L}_{\text{Charb}}(\hat{\mathbf{Y}}, \mathbf{Y}) = \frac{1}{BT} \sum_{b,t} \sqrt{\|\hat{\mathbf{Y}}_{b,t} - \mathbf{Y}_{b,t}\|_2^2 + \epsilon^2}, \tag{1}$$

where B and T denote batch size and sequence length, respectively, and ϵ is a small constant (set to 10^{-3}). All experiments use the AdamW optimizer with a base learning rate of 2×10^{-4} and **bf16 precision** throughout.

4 Experimental Setup

4.1 Dataset and Preprocessing

We train and evaluate on the REDS dataset [8] using the standard official train/validation split. All videos are encoded with H264 (B-frame structure) to obtain low LR frames and codec motion vectors. During training, LR crops of size 64×64 are sampled with random flips and transpositions for augmentation.

4.2 Training Configuration

The model is trained for 50 epochs using AdamW with a learning rate of 2×10^{-4} and $(\beta_1, \beta_2) = (0.9, 0.99)$. Training uses **bfloat16 (bf16) precision** with TF32 enabled, a batch size of 24, and sequence length of 14. All experiments are performed on a single RTX 5090 GPU (32 GB VRAM) with 32 data loader workers.

4.3 Evaluation

We evaluate on the REDS validation set and report the average Y-channel PSNR with a 4-pixel shave. Inference runs at the same resolution as training using codec-derived backward motion vectors. Performance is measured in both reconstruction quality (PSNR) and efficiency (runtime and VRAM).

5 Results

5.1 Quantitative Evaluation

We evaluate our model on two standard benchmarks: REDS4 (natural scenes, high motion) and Vid4 (classic VSR clips). All results are reported on the Y-channel PSNR with a 4-pixel border shave, consistent with standard literature.

5.1.1 Performance on REDS4 (CRF 25)

Table 2 compares our method against recurrent baselines. Our Codec-Aware architecture achieves an average PSNR of **27.17 dB**, outperforming the heavy optical-flow baseline (26.19 dB) while utilizing significantly fewer parameters (15 blocks vs. 30 blocks).

The strong performance on Clips 011 and 015 demonstrates the effectiveness of the **Second-Order Propagation** in scenes with clearly defined edges and textures, where maintaining temporal continuity is critical.

5.1.2 Performance on Vid4 (CRF 25)

We further evaluate on the Vid4 benchmark to analyze robustness across different content types. Table 1 details the per-clip performance.

5.2 Ablation Study

To validate the contribution of the Second-Order Propagation, we conducted an ablation study at CRF 25. We evaluated three configurations to measure the impact of alignment accuracy:

1. **No Motion Alignment:** We disable the MV refiner and warping entirely, treating the network as a frame-independent restorer.
2. **First-Order Only:** We use standard fird order propagation.
3. **Second-Order w/o MV's:** We enable second order propagation but do not use motion vectors for alignment.
4. **Second-Order (Ours):** We enable the full vector chaining mechanism.

Table 3 summarizes the results.

Analysis. The ablation reveals that relying solely on first-order neighbors limits performance in codec-based settings due to the sparse nature of P-frame motion fields. The improvement with Second-Order propagation confirms our hypothesis that looking further into the temporal context is essential when operating on compressed streams with irregular reference structures.

Table 1: Quantitative comparison on Vid4 (CRF 25) and average performance across compression levels.

Method	Params (M)	Per clip (CRF 25)				Average (Y-channel)		
		Calendar	City	Foliage	Walk	CRF 15	CRF 25	CRF 35
EDVR [3]	20.6	21.76 / 0.676	25.74 / 0.665	24.12 / 0.624	27.42 / 0.811	26.53 / 0.794	24.76 / 0.694	22.39 / 0.544
IconVSR [1]	8.7	21.45 / 0.661	25.76 / 0.659	24.25 / 0.629	26.99 / 0.804	26.84 / 0.809	24.61 / 0.688	22.10 / 0.520
CAVSR [7]	8.9	22.99 / 0.747	26.48 / 0.709	24.92 / 0.668	28.20 / 0.842	27.42 / 0.833	25.65 / 0.742	22.84 / 0.574
Ours	**2.6**	21.41 / 0.669	25.38 / 0.633	23.76 / 0.617	26.27 / 0.793	25.00 / 0.734	24.21 / 0.678	21.82 / 0.510

Table 2: Quantitative comparison on REDS4 (CRF 25) and average performance across compression levels.

Method	PSNR / SSIM (CRF 25)				Average PSNR / SSIM		
	Clip 000	Clip 011	Clip 015	Clip 020	CRF 15	CRF 25	CRF 35
FRVSR [10]	24.25 / 0.631	25.65 / 0.687	28.17 / 0.770	24.79 / 0.694	28.55 / 0.838	27.61 / 0.784	25.72 / 0.696
EDVR [3]	24.38 / 0.629	26.01 / 0.702	28.30 / 0.783	25.21 / 0.708	28.72 / 0.805	25.98 / 0.706	23.36 / 0.600
COMISR [6]	24.76 / 0.660	26.54 / 0.722	29.14 / 0.805	25.44 / 0.724	28.40 / 0.809	26.47 / 0.728	23.56 / 0.599
Ours	**26.05 / 0.678**	**27.81 / 0.751**	**30.22 / 0.835**	**26.59 / 0.745**	**28.94 / 0.806**	**27.67 / 0.752**	**24.54 / 0.628**

Configuration	MVs	2nd Order	PSNR (dB)
Baseline (No MVs, First Order)	✗	✗	24.615
First-Order + MVs	✓	✗	24.634
Second Order Only	✗	✓	24.647
Full Model (Ours)	✓	✓	**24.702**

Table 3: Ablation study on REDS4 (CRF 25). We analyze the impact of adding Motion Vectors (MVs) and Second-Order propagation. The Full Model achieves the highest performance (**24.70 dB**), confirming that combining explicit Codec MVs with Second-Order chaining effectively bridges the temporal gap in compressed P-frames.

6 Discussion

6.1 Limitations of Codec Priors

While codec priors provide strong signals for natural video, our analysis of the Vid4 "City" sequence reveals a critical failure mode. In the City clip, the camera pans smoothly rather than having natural movement, so the codec encodes large 16×16 blocks to represent detailed skyscrapers. Our network relies on these coarse block vectors, which lack the sub-pixel precision of optical flow networks to resolve the fine grid structures of the buildings. This highlights how the codec decisions are optimized for compression efficiency, not perceptual quality.

6.2 Texture Hallucination vs. Restoration

On the "Calendar" clip, the performance gap indicates the limits of lightweight restoration. At CRF 25, high-frequency grid lines are quantized to zero. Recovering this information requires generative hallucination (typical of GANs or larger Transformers), which is beyond the capacity of a 2.6M parameter CNN aimed at efficient restoration.

7 Conclusion

We have presented a Codec-Aware VSR architecture that effectively operationalizes the metadata embedded in H.264 bitstreams. By replacing heavy optical flow networks with a lightweight MV Refiner, we achieve a system that is both accurate and efficient.

Our results on the REDS dataset demonstrate that codec guidance can outperform can preform well in scenarios with natural motion while using far fewer parameters than heavy optical flow based methods. The introduction of Second-Order Propagation successfully mitigates the P-frame occlusion issue, proving that vector chaining is a viable strategy for handling compressed video streams.

Future Work. To address the generalization issues raised during analysis, future iterations should: (1) Explore Flow-Guided Deformable Alignment (as seen in BasicVSR++) to improve robustness to coarse motion vectors; (2) Integrate *Residual Maps* as a confidence weight in the fusion layer to automatically down-weight unreliable motion vectors; and (3) Investigate generative approaches to hallucinate textures lost in high-frequency regions like the Calendar clip.

References

[1] K. C. K. Chan, X. Wang, K. Yu, C. Dong, and C. C. Loy, "BasicVSR: The search for efficient Video Super-Resolution," in *Proceedings of the IEEE/CVF Conference on Computer Vision and Pattern Recognition (CVPR)*, 2021.

[2] K. C. K. Chan, S. Zhou, X. Xu, and C. C. Loy, "BasicVSR++: Improving Video Super-Resolution with enhanced propagation and alignment," in *Proceedings of the IEEE/CVF Conference on Computer Vision and Pattern Recognition (CVPR)*, 2022.

[3] X. Wang, K. C. K. Chan, K. Yu, C. Dong, and C. C. Loy, "EDVR: Video restoration with enhanced deformable convolutional networks," in *Proceedings of the IEEE/CVF*

Conference on Computer Vision and Pattern Recognition Workshops (CVPRW), NTIRE, 2019.

[4] T. Xue, B. Chen, J. Wu, D. Wei, and W. T. Freeman, "Video enhancement with task-oriented flow," *International Journal of Computer Vision (IJCV)*, vol. 127, no. 8, pp. 1106–1125, 2019.

[5] A. Ranjan and M. J. Black, "Optical flow estimation using a spatial pyramid network (SPyNet)," in *Proceedings of the IEEE Conference on Computer Vision and Pattern Recognition (CVPR)*, 2017.

[6] Y. Li, P. Jin, F. Yang, C. Liu, M. Yang, and P. Milanfar, "COMISR: Compression-informed Video Super-Resolution," in *Proceedings of the IEEE/CVF International Conference on Computer Vision (ICCV)*, 2021.

[7] Y. Wang, T. Isobe, X. Jia, X. Tao, H. Lu, and Y.-W. Tai, "Compression-aware Video Super-Resolution," in *Proceedings of the IEEE/CVF Conference on Computer Vision and Pattern Recognition (CVPR)*, 2023.

[8] S. Nah, S. Baik, S. Hong, G. Moon, S. Son, R. Timofte, and K. M. Lee, "Ntire 2019 challenge on video deblurring and super-resolution: Dataset and study," in *CVPR Workshops*, June 2019.

[9] P. Charbonnier, L. Blanc-Féraud, G. Aubert, and M. Barlaud, "Two deterministic half-quadratic regularization algorithms for computed imaging," in *Proceedings of the IEEE International Conference on Image Processing (ICIP)*, vol. 2, pp. 168–172, IEEE, 1994.

[10] M. S. M. Sajjadi, R. Vemulapalli, and M. Brown, "Frame-Recurrent Video Super-Resolution," in *The IEEE Conference on Computer Vision and Pattern Recognition (CVPR)*, June 2018.

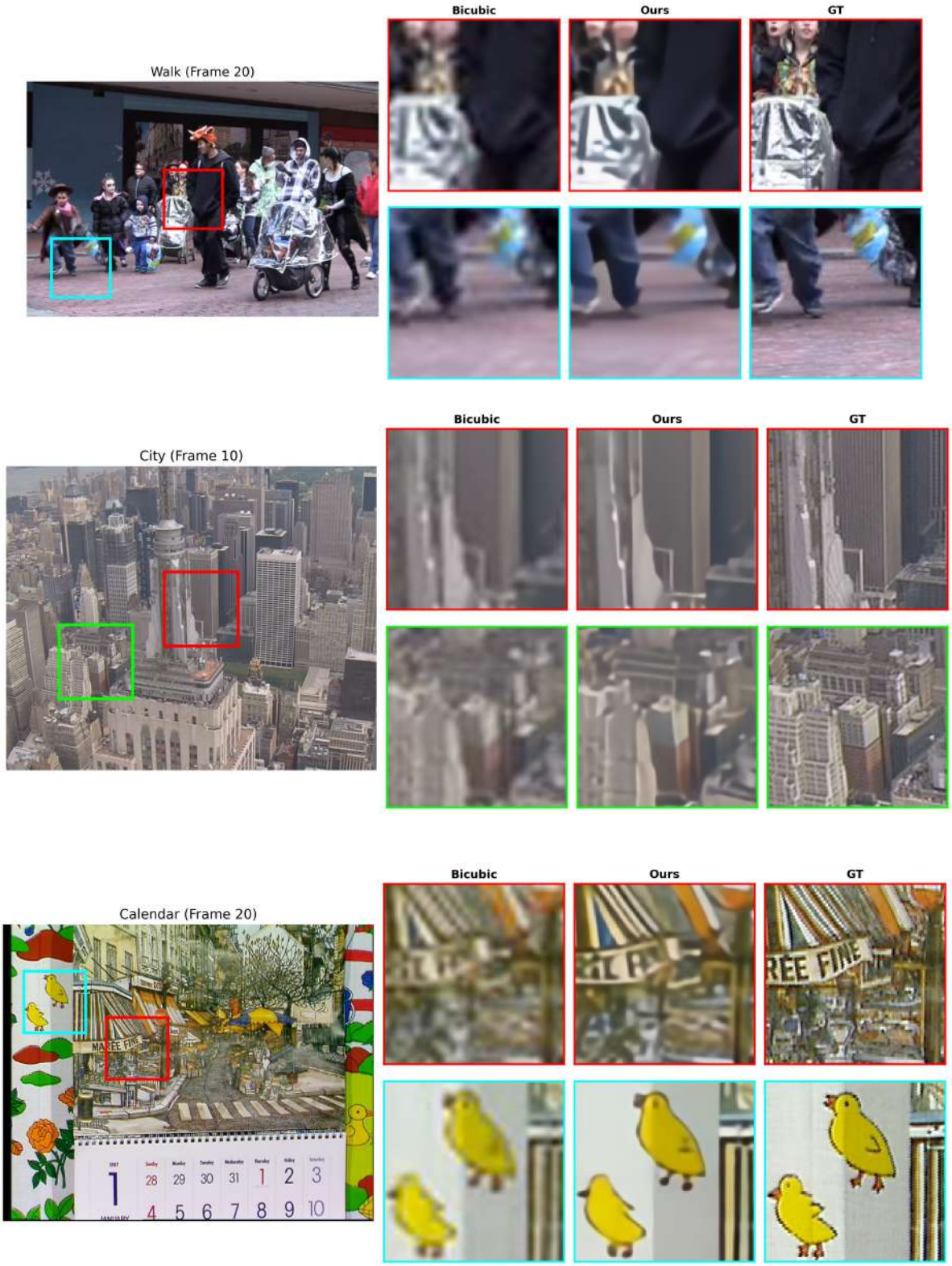
Walk (Frame 20)
Bicubic
Ours
GT
City (Frame 10)
Bicubic
Ours
GT
Calendar (Frame 20)
Bicubic
Ours
GT

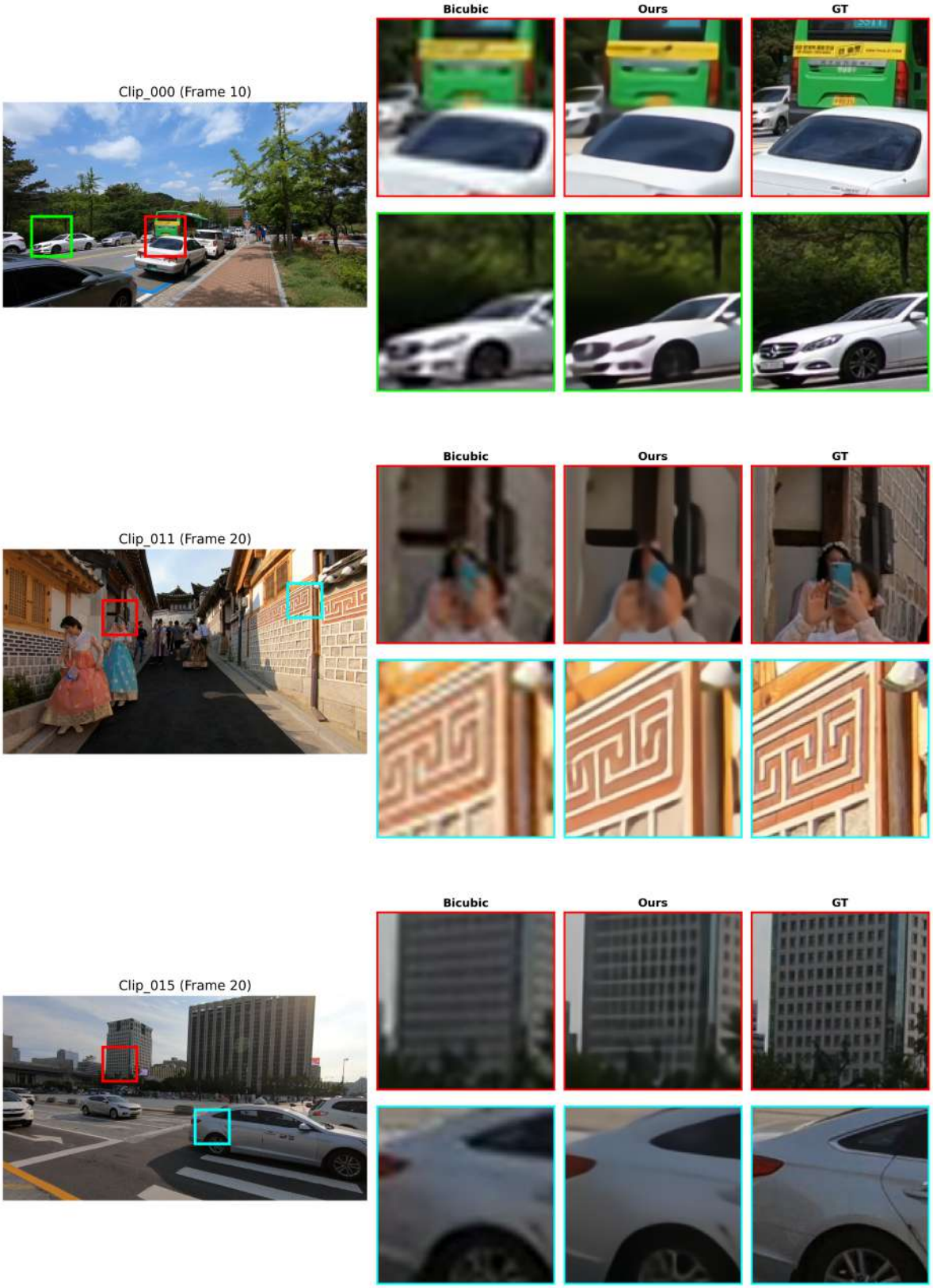
Bicubic
Ours
GT
Clip_000 (Frame 10)
Bicubic
Ours
GT
Clip_011 (Frame 20)
Bicubic
Ours
GT
Clip_015 (Frame 20)