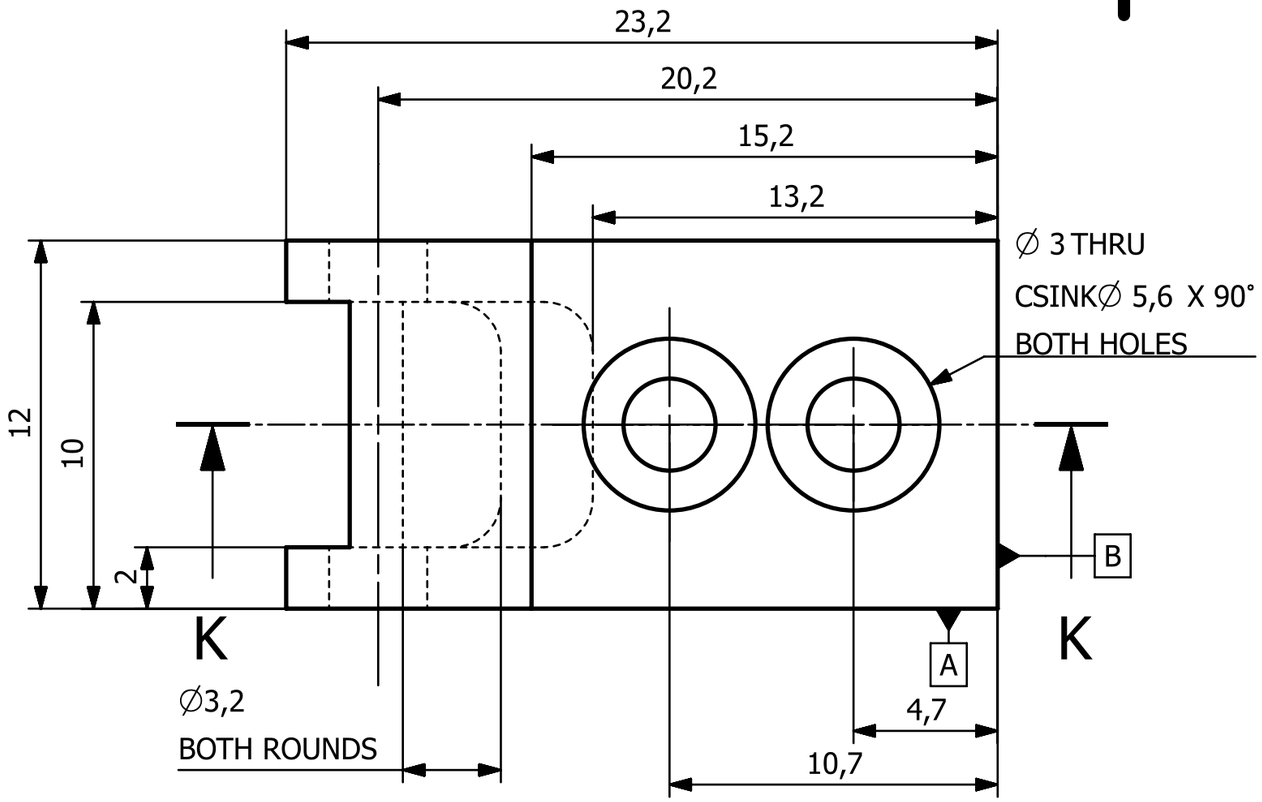

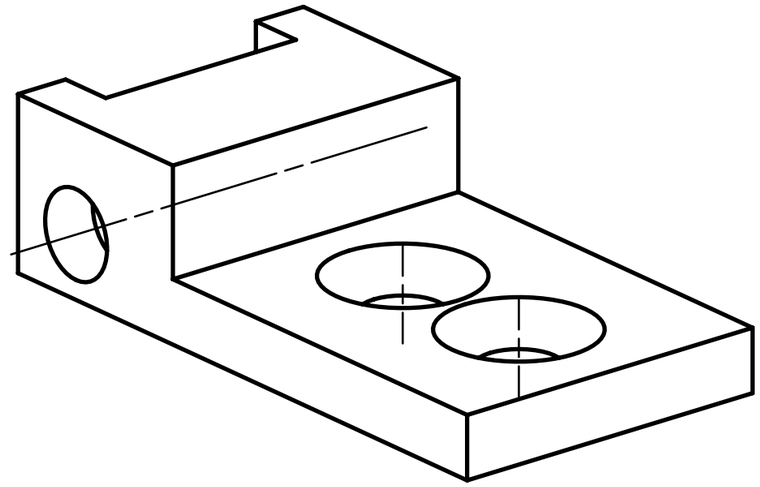

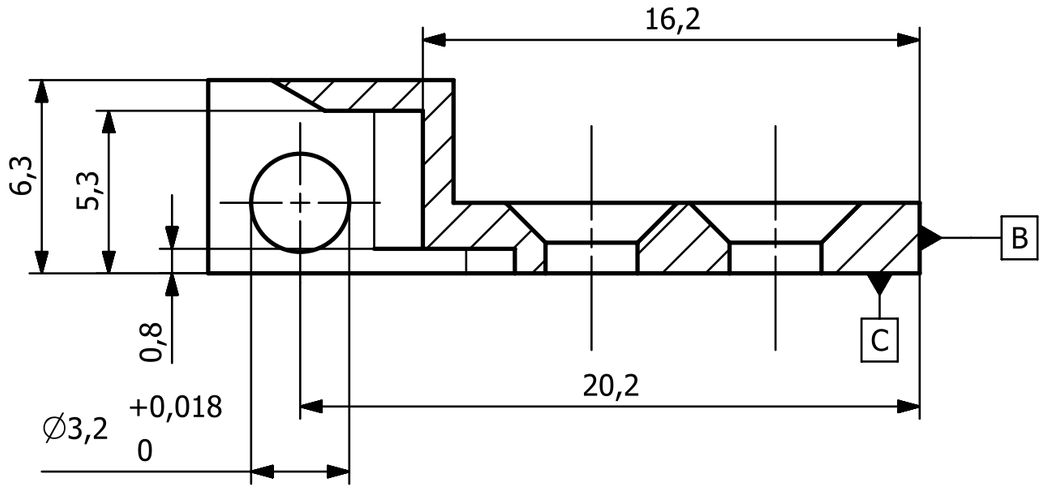

SECTION K-K

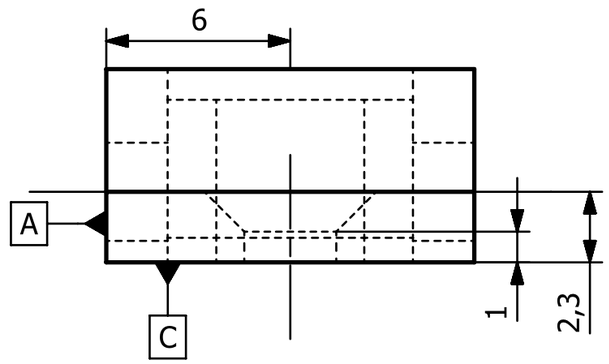

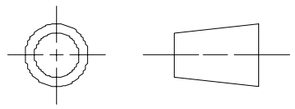

ALL DIMENSIONS IN MM

ALL TOLERANCES UNLESS OTHERWISE NOTED ARE 0.05MM

FIRST ISSUED	10 Feb 2019	TITLE
DRAWN BY	ATAMANCHUK JESSIE	MANUFACTURING TECHNICAL DRAWING
CHECKED BY	GREGOR IAN	
APPROVED BY	GREGOR IAN	SIZE A3 / DWG NO. MOUNTING_HINGE / SHEET REV A
MATERIAL	ALUMINIUM	SCALE 5:1 / SHEET 1 OF 1 / A3