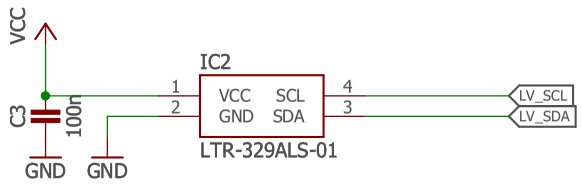

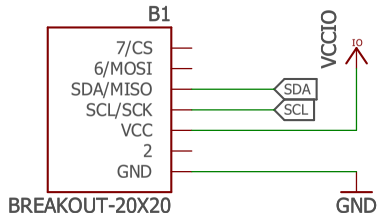

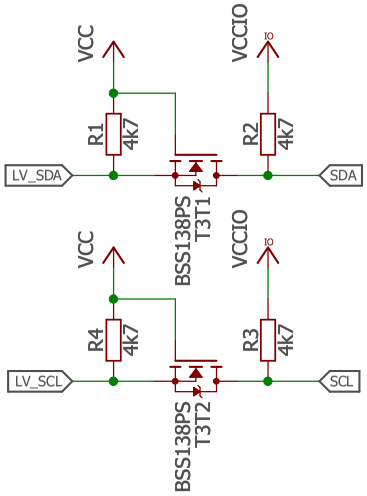

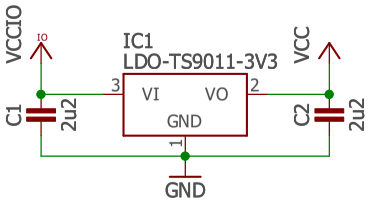

Released under the Creative Commons Attribution Share-Alike License. http://creativecommons.org/licenses/by-sa/4.0/

Designed by Stephan Watterott (Watterott electronic)

CE WEEE Watterott OS HW

www.watterott.com

LTR-329ALS-01-Breakout_v10

03.11.2019 14:05

Sheet: 1/1

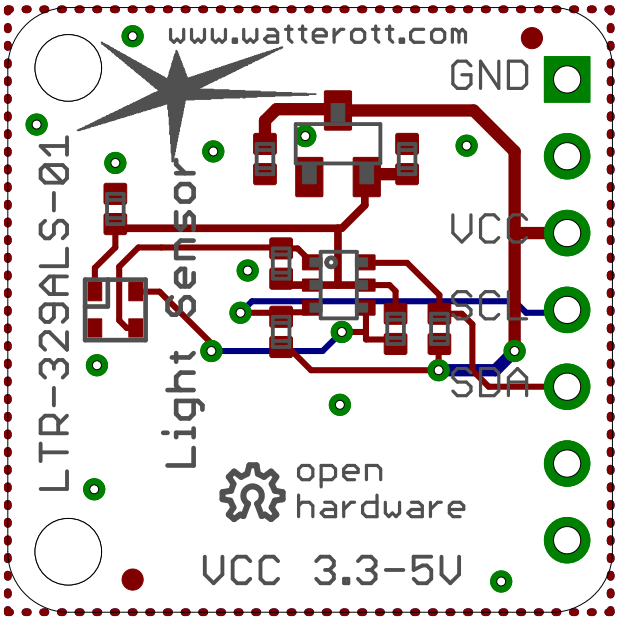
www.watterott.com
GND
VCC
SCL
SDA
LTR-329ALS-01
Light sensor
open
hardware
VCC 3.3-5V