DATE: 16/02/26

VERIFICATION OF KIRCHOFF'S VOLTAGE LAW AND KIRCHOFF'S CURRENT LAW

Aim:

To verify Kirchoff's voltage law for loop 1 and Kirchoff's current law in node A for the following circuit.

Apparatus required:

Laptop with proteus software.

SAVEETHA
ENGINEERING COLLEGE
SAVEETHA NAGAR 602 105
BE THE BEST
2001

Theory:

According to Kirchoff's voltage law sum of potential raises are equal to sum of potential drop in a loop.

In loop 1 by KVL:-

$$V = V_1 + V_2 + V_3 \rightarrow (1)$$

$$100 = IR_1 + IR_2 + IR_3$$

$$R_{eq} = R_1 + R_2 + R_3$$

$$R_{eq} = 30 + 50 + 100$$

$$R_{eq} = 180\,\Omega$$

$$I = V/R_{eq} = 100/180 = 0.556A$$

$$V_1 = V_{30\,\Omega} = IR_1 = 0.556 \times 30 = 16.68V$$

$$V_2 = V_{50\,\Omega} = IR_2 = 0.556 \times 50 = 27.8V$$

$$V_3 = V_{100\,\Omega} = IR_3 = 0.556 \times 100 = 55.6V$$

CIRCUIT:-

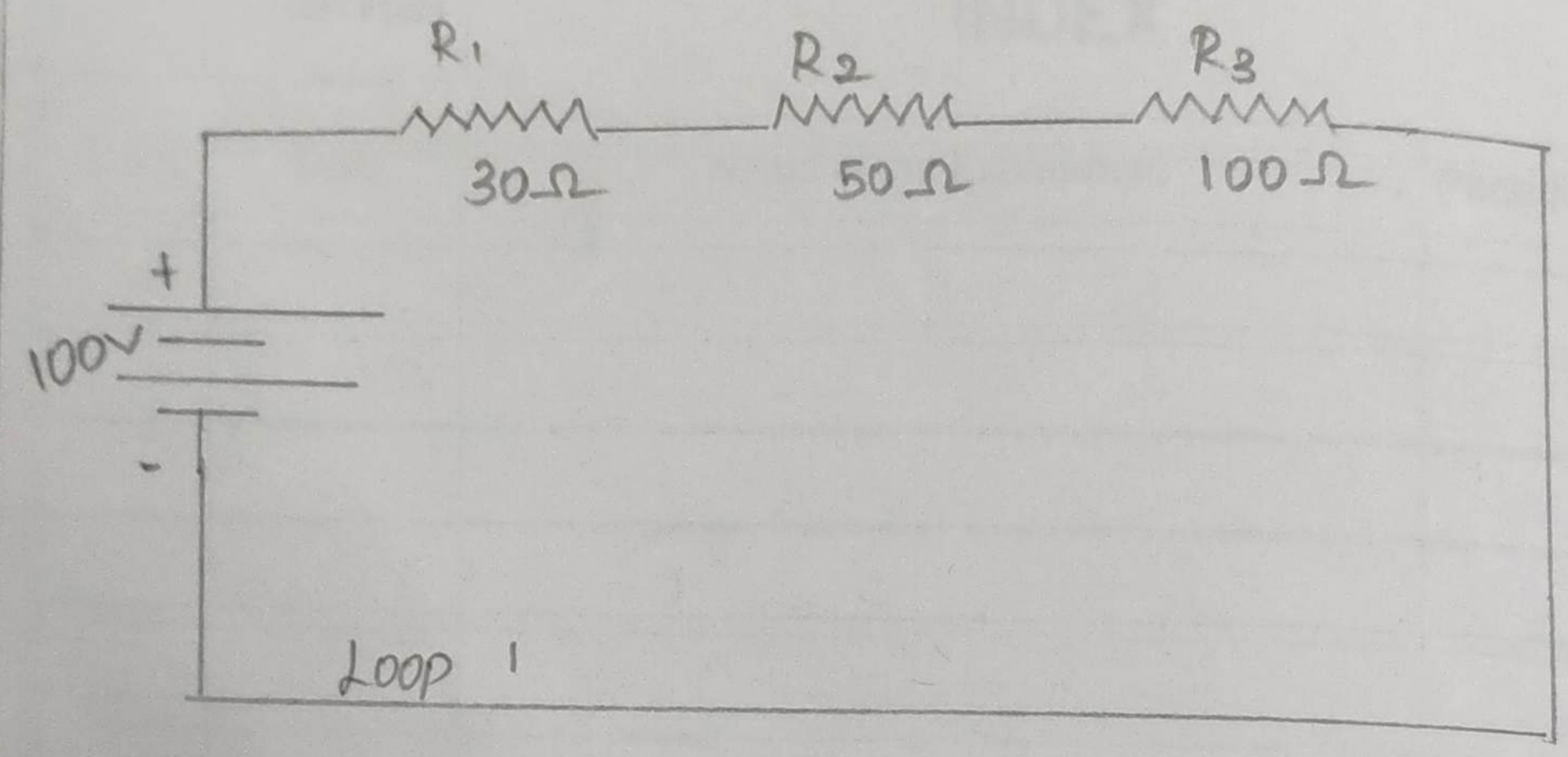

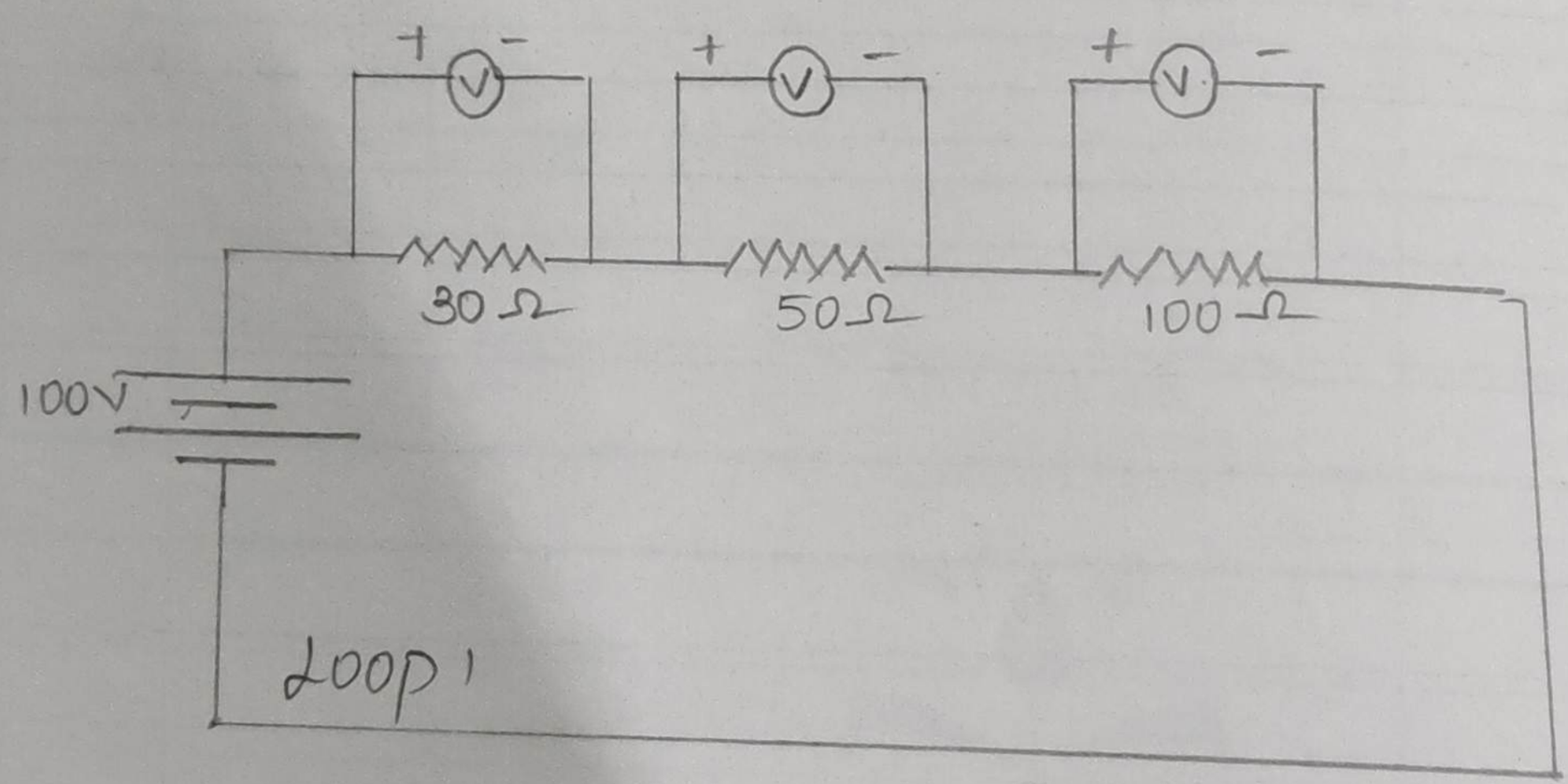

TABULATION:-

KVL	Source (V)	$V_{30\Omega}$ (V)	$V_{50\Omega}$ (V)	$V_{100\Omega}$ (V)	$V_{30\Omega}+V_{50\Omega}+V_{100\Omega}$ V
Theoretical	100	16.68V	27.8V	55.6V	100.05
practices	100	16.7V	27.8V	55.6V	100.1

Substitute V_1, V_2 and V_3 values in ①

$$100 = 16.68 + 27.8 + 55.6$$

$$100V = 100V$$

Hence proved

KIRCHOFF'S CURRENT LAW:-

In a junction incoming current is equal to outgoing current.

At node A,

$$I_{30\Omega} + I_{50\Omega} + I_{100\Omega} = 0$$

$$\frac{V-100}{30} + \frac{V}{50} + \frac{V}{100} = 0$$

$$V\left[\frac{1}{30} + \frac{1}{50} + \frac{1}{100}\right] - \frac{100}{30} = 0$$

$$V(0.0633) - 3.333 = 0$$

$$V = \frac{3.333}{0.0633}$$

$$V = 52.63V$$

$$I_{30\Omega} = \frac{V-100}{30} = \frac{52.63-100}{30} = -1.58A$$

$$I_{50\Omega} = \frac{V}{50} = \frac{52.63}{30} = 1.05A$$

$$I_{100\Omega} = \frac{V}{100} = \frac{52.63}{100} = 0.53A$$

SAVEETHA ENGINEERING COLLEGE SAVEETHA NAGAR 602 105 BE THE BEST

CIRCUIT:-

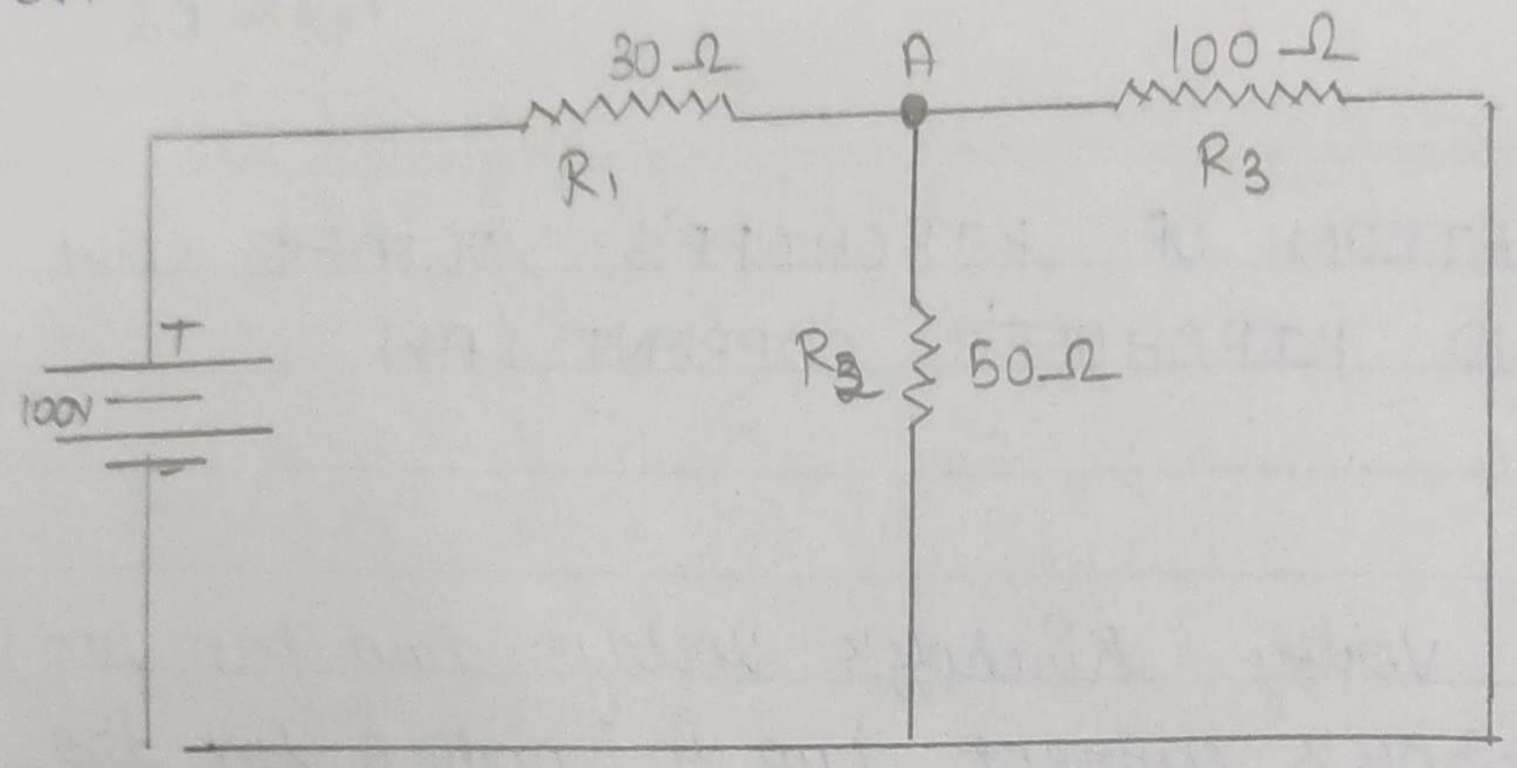

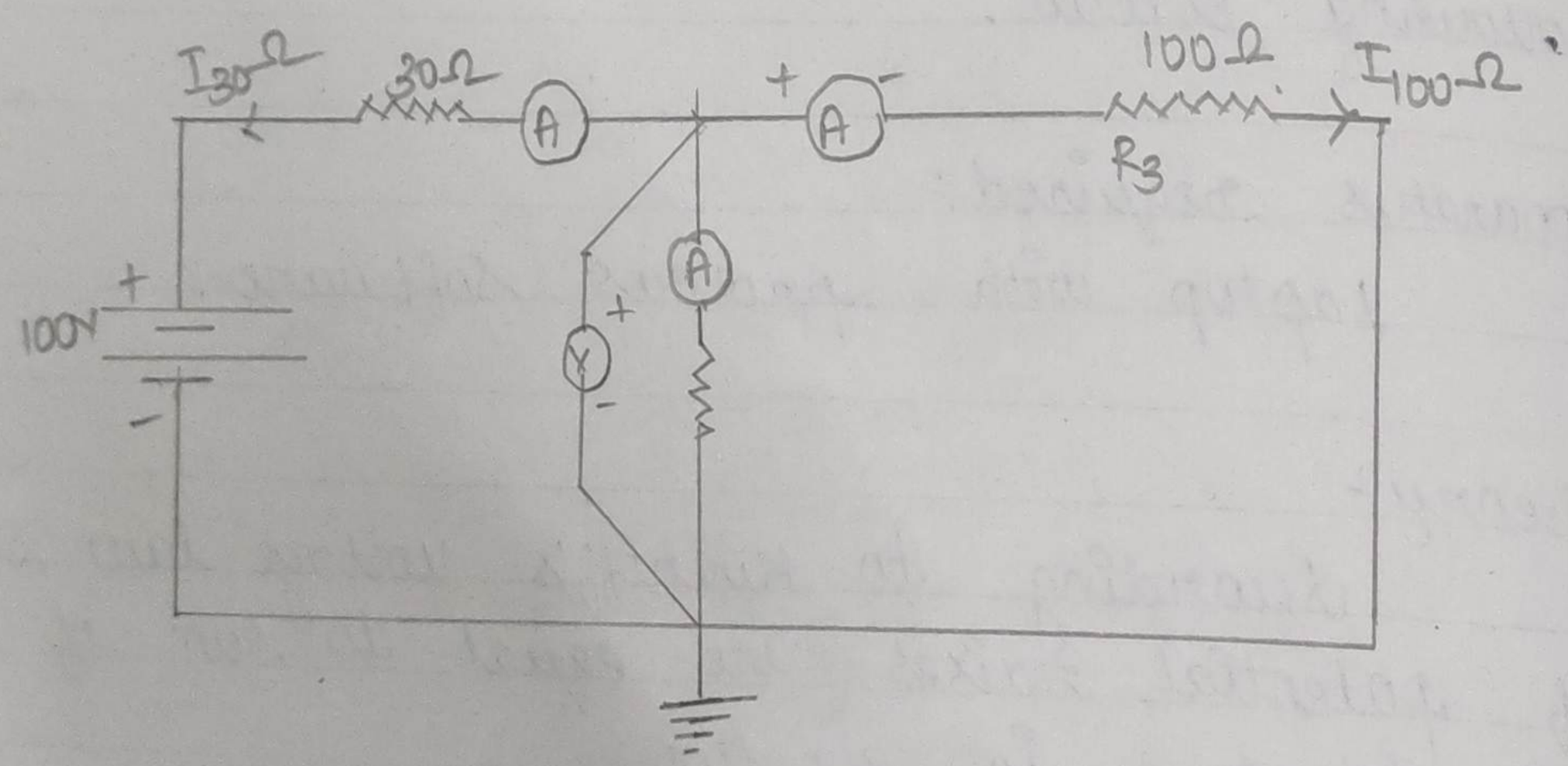

TABULATION:-

KCL	$I_{30\Omega}$	$I_{50\Omega}$	$I_{100\Omega}$	V_A
Theoritical	-1.48A	1.85A	0.56A	52.63V
Practical	1.58 A	1.05A	0.53A	52.6V

Expt. No.

At node A:

$$I_{30\Omega} + I_{50\Omega} + I_{100\Omega} = 0$$

$$-1.58 + 1.05 + 0.58 = 0$$

$$0 = 0$$

$\therefore$ Hence proved

SAVEETHA
ENGINEERING COLLEGE
SAVEETHA NAGAR 602 105
BE THE BEST
2001

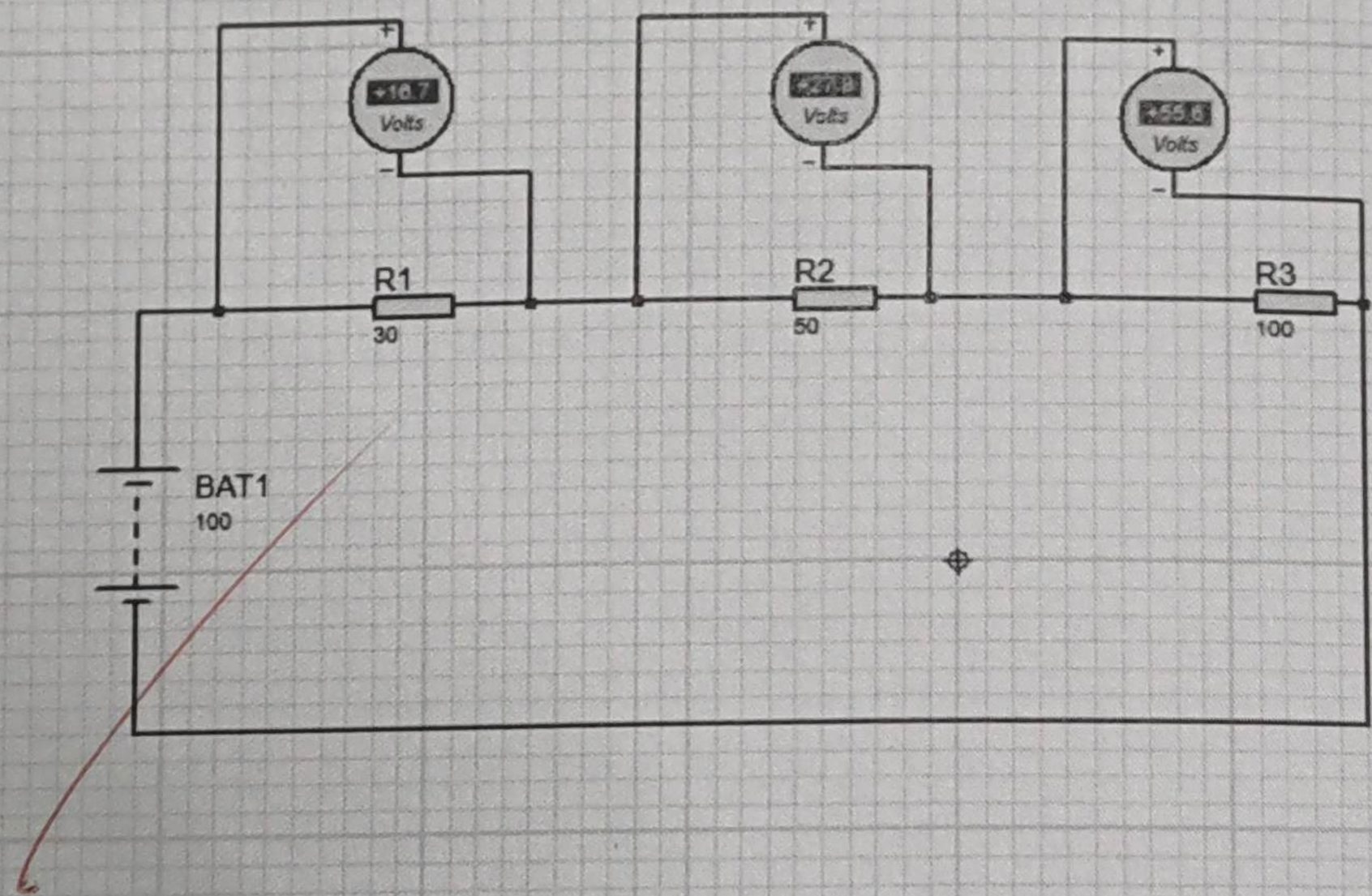
+10.7
Volts
+27.8
Volts
+55.6
Volts
R1
30
R2
50
R3
100
BAT1
100

Expt. No.

SAVEETHA
ENGINEERING COLLEGE
SAVEETHA NAGAR 602 105
BE THE BEST
2001

18/03/26

Result:-

Thus, the Kirchoff's voltage law and Kirchoff's current law has been verified successfully.

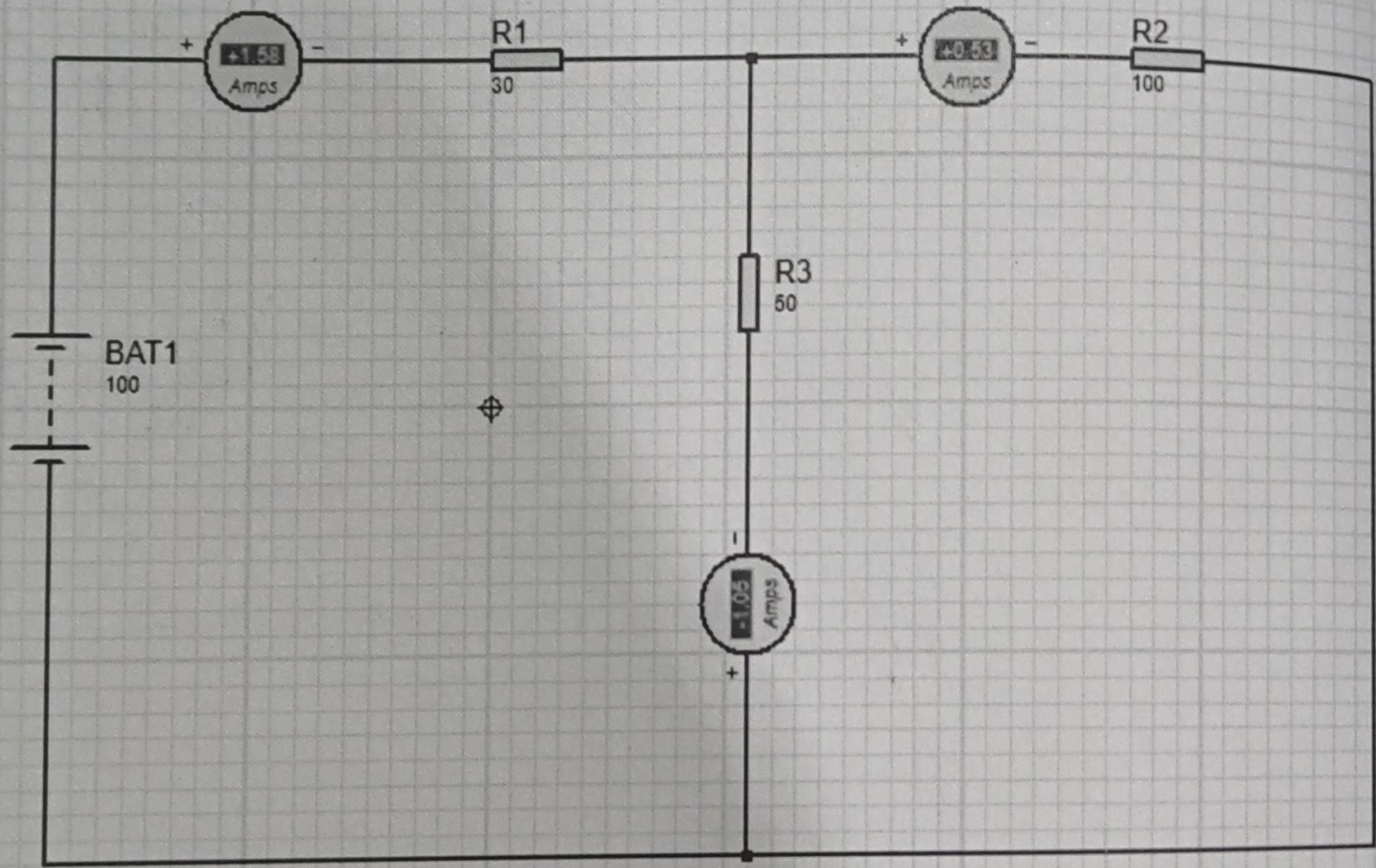
+
1.58
Amps
-
R1
30
+
0.53
Amps
-
R2
100
R3
50
BAT1
100
-
-1.05
Amps
+