Report
Milestone - 1

TEAM 3

Mohesh V K - 2362628
Praneeth - 2362634
Ramalingam K - 2362617
Jency A - 2361016

Problem Statement :-

Air quality monitoring & health risk prediction for enclosed military shelters

Overview of System Design

The first milestone of the project focuses on the design and conceptualization of an integrated IoT-based air quality monitoring and health risk prediction system. This stage involves defining the complete architecture of the system, identifying the hardware and software components, and establishing the flow of data from sensors to the final visualization layer. The goal of this phase is to create a structured and scalable framework that supports real-time data acquisition, processing, and analysis.

The system is designed to continuously monitor environmental parameters within enclosed spaces using multiple sensors connected to a microcontroller unit. These parameters include temperature, humidity, air quality, and atmospheric pressure, which are critical indicators of environmental conditions and potential health risks.

System Architecture Description

The proposed system follows a layered architecture consisting of four major components:

- sensing layer
- processing layer
- cloud/storage layer
- Visualization layer.

At the sensing layer, environmental data is collected using sensors such as DHT11 for temperature and humidity, MQ135 for air quality, and BMP180 for atmospheric pressure. These sensors are interfaced with an ESP32 microcontroller, which acts as the central processing unit of the system.

The processing layer involves the ESP32 acquiring real-time sensor data and preparing it for transmission. The microcontroller reads analog and digital signals from the sensors and formats the data into a structured output. This data is then transmitted to a cloud platform for storage and further processing.

In the cloud/storage layer, the data is stored in a structured format, enabling continuous logging and easy retrieval. Platforms such as ThingSpeak or CSV-based storage systems are used to maintain a record of environmental readings along with timestamps. This stored data serves as the foundation for further analysis and model training.

Finally, the visualization layer presents the processed data in an intuitive and user-friendly format. Tools such as Power BI are used to generate dashboards that display trends, variations, and real-time environmental conditions. This layer enables users to monitor air quality and identify potential risks effectively.

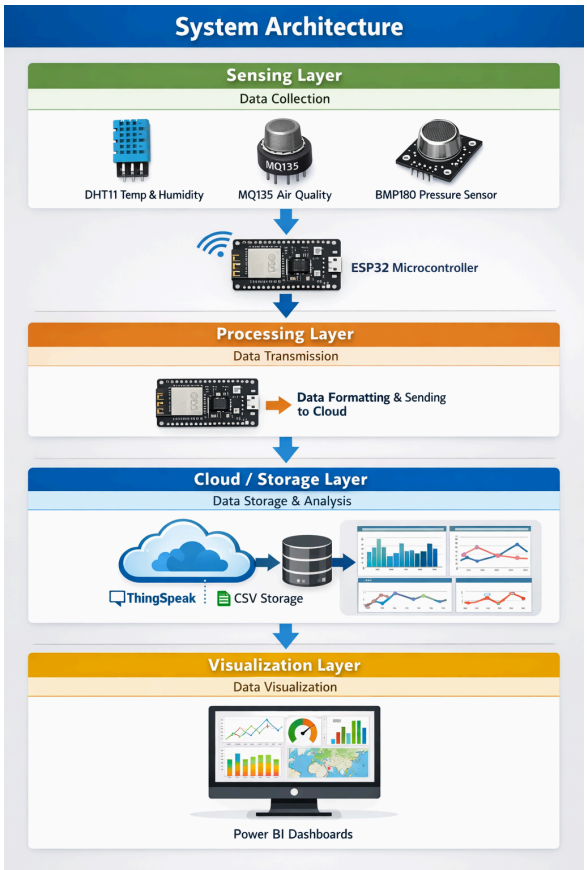

Simulation Setup and Implementation

The system design was initially validated using a simulation environment to ensure correct connectivity and functionality of all components before hardware deployment. The simulation was carried out using Cirkit Designer, where the ESP32 microcontroller and sensors including DHT11, MQ135, and BMP180 were virtually connected.

Each component was configured according to its required input and output specifications. The DHT11 sensor was used to simulate temperature and humidity data, the MQ135 sensor provided air quality readings, and the BMP180 sensor simulated atmospheric pressure values. Proper pin connections were established between the sensors and the ESP32, ensuring correct power supply and communication protocols such as analog input and I2C communication.

The simulation environment enabled real-time observation of sensor outputs, allowing verification of data acquisition and transmission. This step helped identify and correct connection issues, validate sensor behavior, and ensure that the system could generate continuous environmental data. The successful simulation confirmed the feasibility of the proposed system design and served as a foundation for further implementation stages.

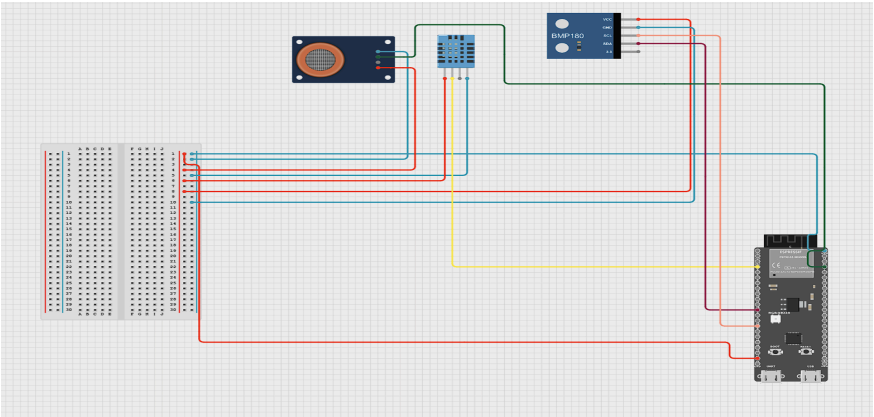

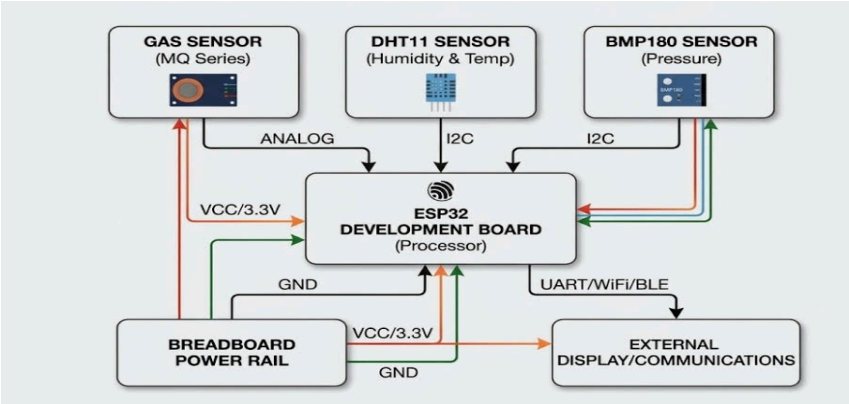

URL :-https://app.cirkitdesigner.com/project/e96480da-3d67-4d56-a638-009fa4fab3c7

Cloud Integration using ThingSpeak

To enable real-time data storage and remote monitoring, the system integrates with the ThingSpeak cloud platform. ThingSpeak is an IoT analytics platform that allows data to be collected, stored, and visualized in real time. In this project, it is used as the primary cloud layer for handling environmental sensor data.

The ESP32 microcontroller transmits sensor readings, including temperature, humidity, air quality, and pressure, to ThingSpeak channels using internet connectivity. Each parameter is mapped to a specific field within the platform, allowing structured and organized data storage. The platform automatically records timestamps along with each data entry, ensuring accurate tracking of environmental changes over time.

ThingSpeak also provides built-in visualization tools, enabling the generation of graphs and trends for each parameter. These visualizations help in understanding variations in air quality and environmental conditions. Additionally, the stored data can be exported for further analysis and machine learning model training.

The integration of ThingSpeak enhances the system by enabling remote access, continuous monitoring, and reliable data storage, forming a crucial part of the overall architecture.

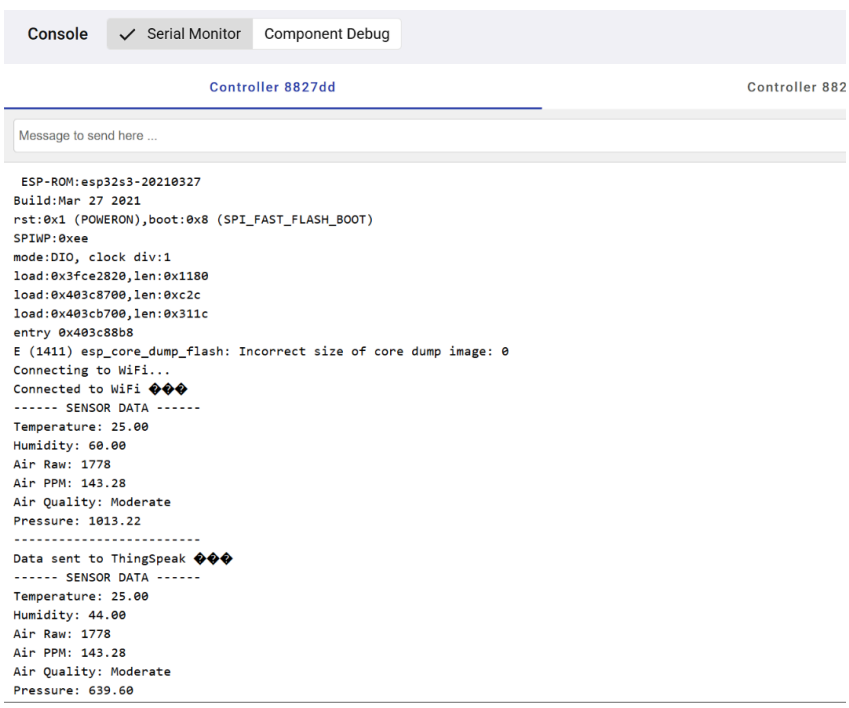

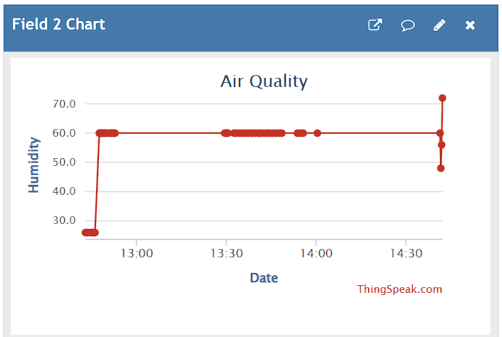

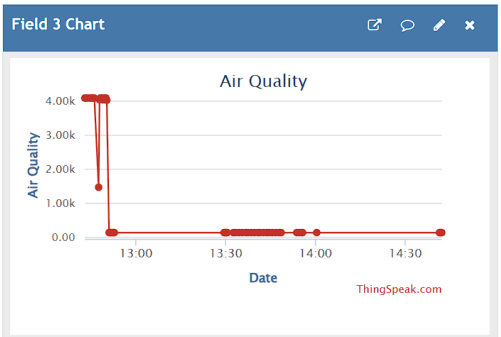

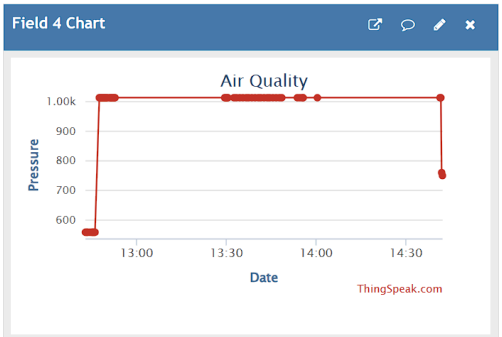

URL:-https://thingspeak.mathworks.com/channels/3061124

Outcome

At the end of this milestone, a complete system design has been established, including hardware selection, software tools, and data flow architecture. The simulation setup has been successfully implemented, and data transmission to platforms such as ThingSpeak has been configured. The foundational framework for machine learning integration and dashboard visualization has also been defined, ensuring readiness for the next stages of development.