08-04-2026

Report
Milestone - 3

Live Data Simulation & Model Integration

TEAM 3
Mohesh V K - 2362628
Praneeth - 2362634
Ramalingam K - 2362617
Jency A - 2361016

1. Overview

The third milestone focuses on integrating real-time data simulation with the trained machine learning model to enable dynamic health risk prediction. This phase builds upon the system architecture (Milestone 1) and machine learning model (Milestone 2) by combining both into a real-time intelligent system.

The objective of this milestone is to simulate live environmental data, transmit it to the cloud, and use the trained model to generate continuous health risk predictions.

2. Live Data Simulation

2.1 Purpose

Since real hardware sensors are not physically deployed, a Python-based simulation was implemented to mimic real-time sensor data generation.

2.2 Parameters Simulated

The following environmental parameters were generated:

- Temperature (°C)
- Humidity (%)
- Air Quality (PPM)
- Pressure (hPa)
- Timestamp

These parameters are identical to those used in the dataset generation phase to ensure consistency with the trained model.

2.3 Simulation Method

A continuous loop was used to generate new data at regular intervals (every 15 seconds). Each iteration produces a new set of environmental readings, simulating real-world sensor behavior.

2.4 Justification

This approach allows the system to:

- Mimic real-time IoT sensor output
- Provide continuous data flow
- Enable real-time analysis without physical hardware

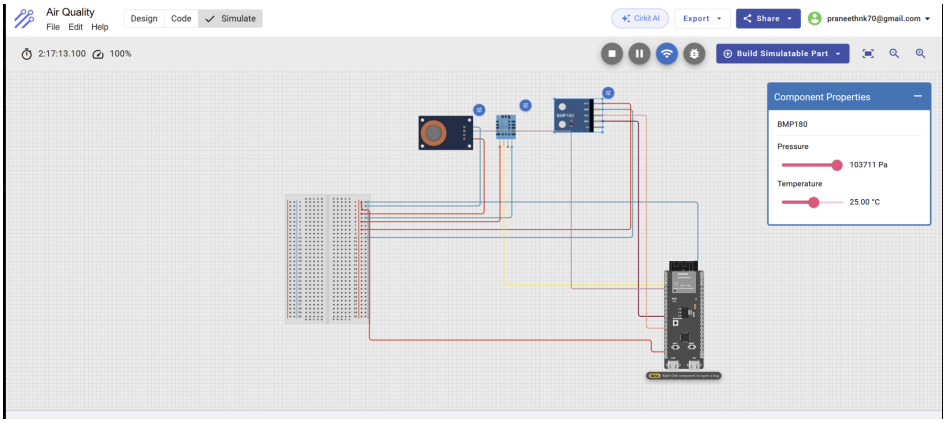

3. Cloud Integration using ThingSpeak

3.1 Purpose

ThingSpeak was used as the cloud platform to store and visualize the simulated environmental data in real time.

3.2 Implementation

- A ThingSpeak channel was created
- Four fields were configured:
    - Temperature
    - Humidity
    - Air Quality
    - Pressure
- Data was transmitted using HTTP requests and a Write API Key

3.3 Data Flow

Python Simulation → ThingSpeak API → Cloud Storage → Graph Visualization

3.4 Outcome

- Real-time graphs were generated
- Continuous data updates were visible
- Cloud-based monitoring was successfully achieved

4. Local Data Storage

In addition to cloud transmission, the live data was also stored locally in a CSV file (live_data.csv).

Purpose

- Enables integration with machine learning model
- Acts as a buffer between data generation and prediction
- Allows easy data access for processing

5. Model Integration

5.1 Objective

To integrate the trained machine learning model from Milestone 2 with live incoming data for real-time prediction.

5.2 Process

- The trained model (.pkl file) was loaded
- Latest data from the CSV file was extracted
- Input features were passed to the model
- Model predicted the corresponding risk level

5.3 Continuous Prediction

A loop-based approach was used to:

- Read latest data
- Generate prediction
- Display output

This process runs continuously, ensuring real-time decision-making.

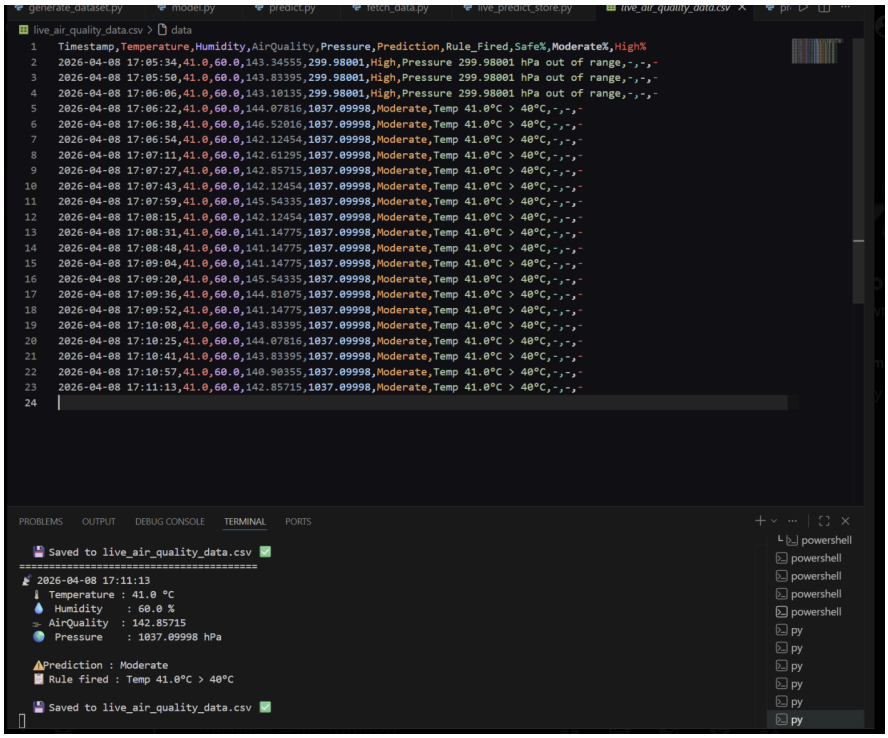

6. Real-Time Prediction Output

The system continuously produces outputs such as:

Temperature: 30°C
Humidity: 60%
Air Quality: 300 PPM
Predicted Risk: Moderate

This demonstrates the system's ability to analyze live data and generate health risk predictions dynamically.

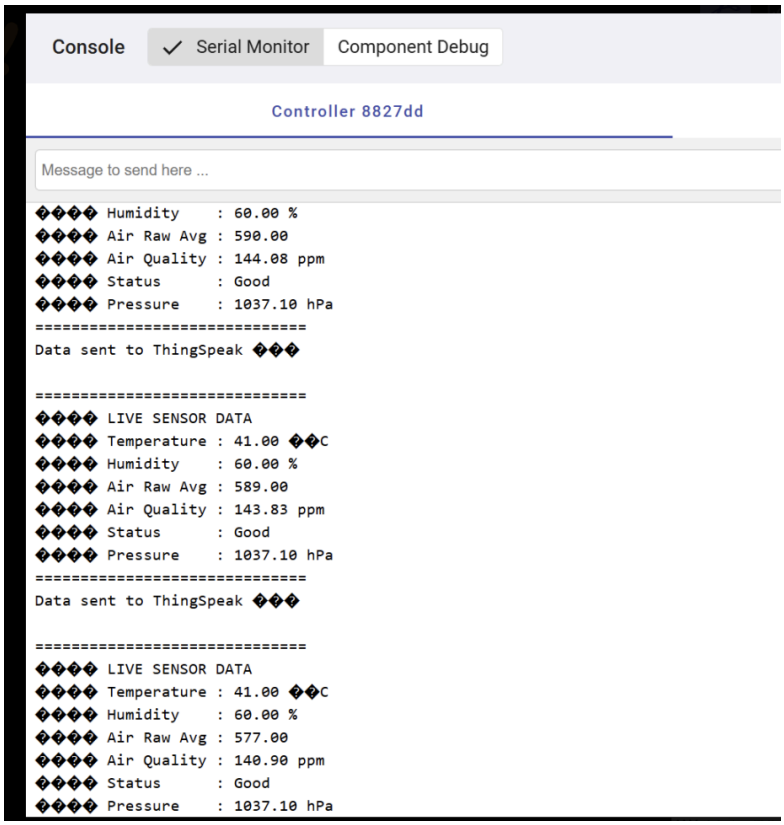

7. System Workflow

Live Data Simulation (Python)
↓
ThingSpeak Cloud Upload
↓
Local CSV Storage
↓
ML Model (Random Forest)
↓
Real-Time Risk Prediction

8. Result and Discussion

The integrated system successfully demonstrated real-time environmental monitoring and prediction. The key observations include:

- Continuous data generation and cloud updates
- Accurate prediction based on trained model
- Seamless integration between simulation and machine learning

The system effectively replicates a real-world IoT-based intelligent monitoring system.

9. Outcome

At the end of this milestone, a fully functional real-time system was developed that:

- Simulates environmental sensor data
- Uploads data to the cloud
- Integrates machine learning for prediction
- Provides continuous health risk analysis

This milestone completes the transition from a static model to a dynamic real-time intelligent system.