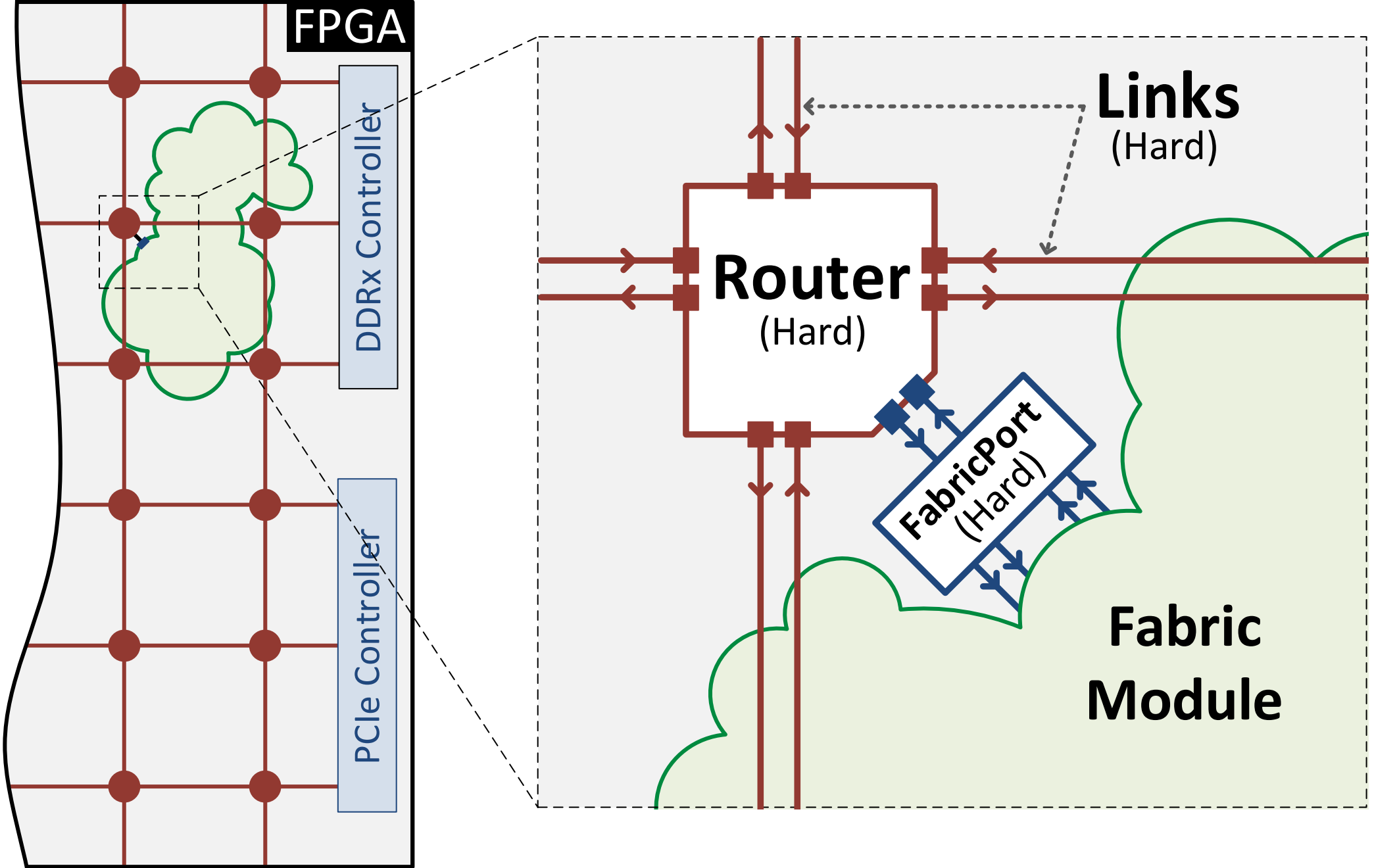
FPGA
DDRx Controller
PCIe Controller
Links
(Hard)
Router
(Hard)
FabricPort
(Hard)
Fabric
Module