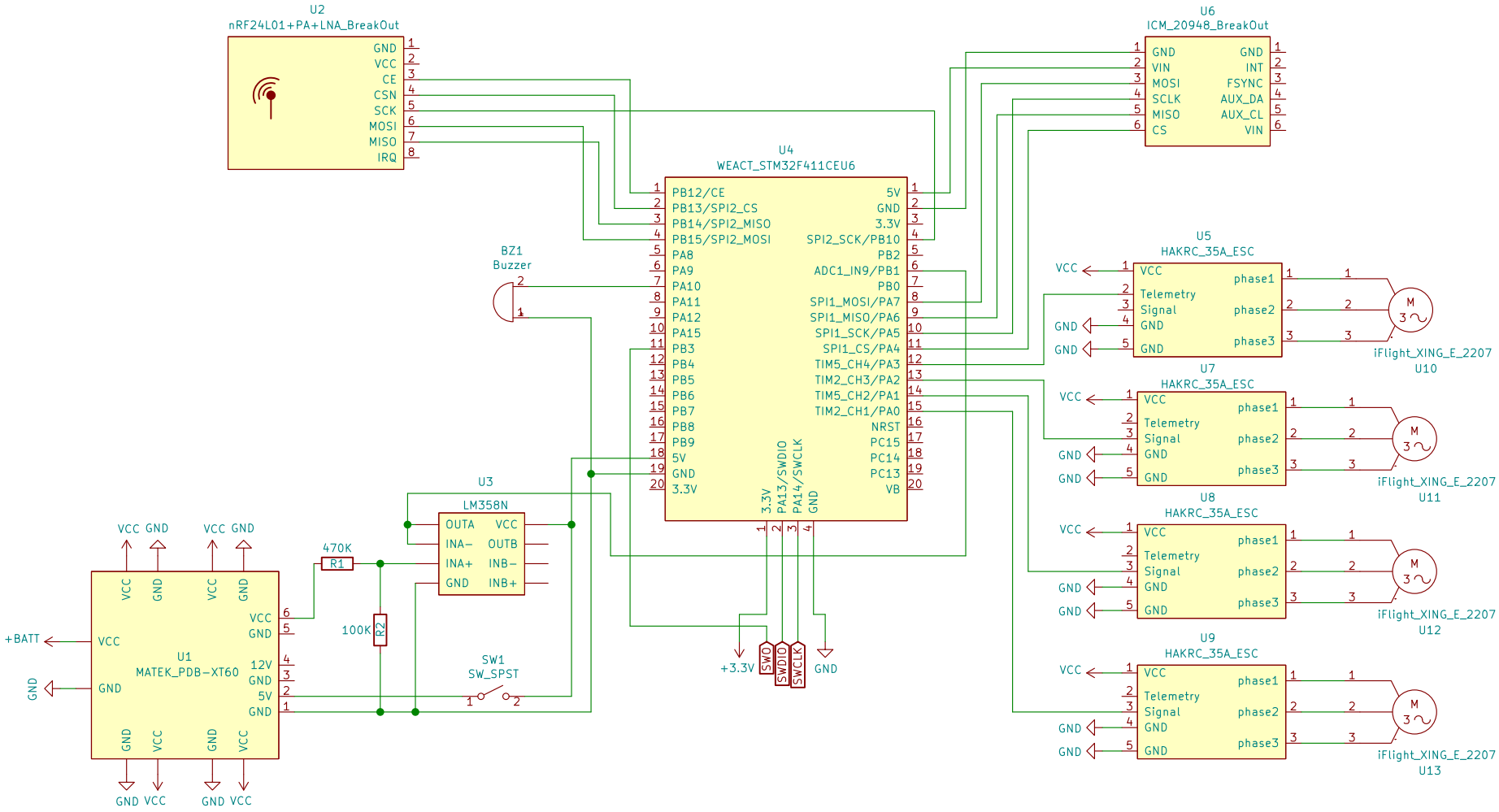

Designed by : mokhwasomssi
https://github.com/mokhwasomssi/gyroscope−quadcopter

Sheet: /
File: quadcopter.sch

Title: Flight Management Unit

Size: A4	Date: 2021−04−06	**Rev: 1**
KiCad E.D.A. eeschema (5.1.9)−1		Id: 1/1