Heart ECG Monitor

by Ohmies

Device Datasheet

1. Overview

This document presents the technical specifications, electrical characteristics, block diagrams, and performance details of the Single-Lead ECG Monitor. The device employs precision analog electronics for signal amplification, filtering, and conditioning, enabling accurate acquisition of ECG waveforms from human subjects. It is designed for educational, experimental, and laboratory use.

2. Features

- Single-lead ECG measurement (Lead I configuration)
- Precision analog front-end with high-performance instrumentation amplifier
- High Common-Mode Rejection Ratio (CMRR) for effective suppression of mains and environmental noise
- Band-pass filtering optimized for the ECG frequency range
- 50Hz notch filter for mains interference rejection
- Low-noise analog output for accurate signal monitoring
- Flexible power options: 3.7V rechargeable Lithium-Polymer battery x 2, are used to apply a dual supply

3. Applications

- Biomedical signal acquisition
- Heart rate monitoring
- Student laboratory projects
- Analog electronics practical demonstrations

4. Block Diagram

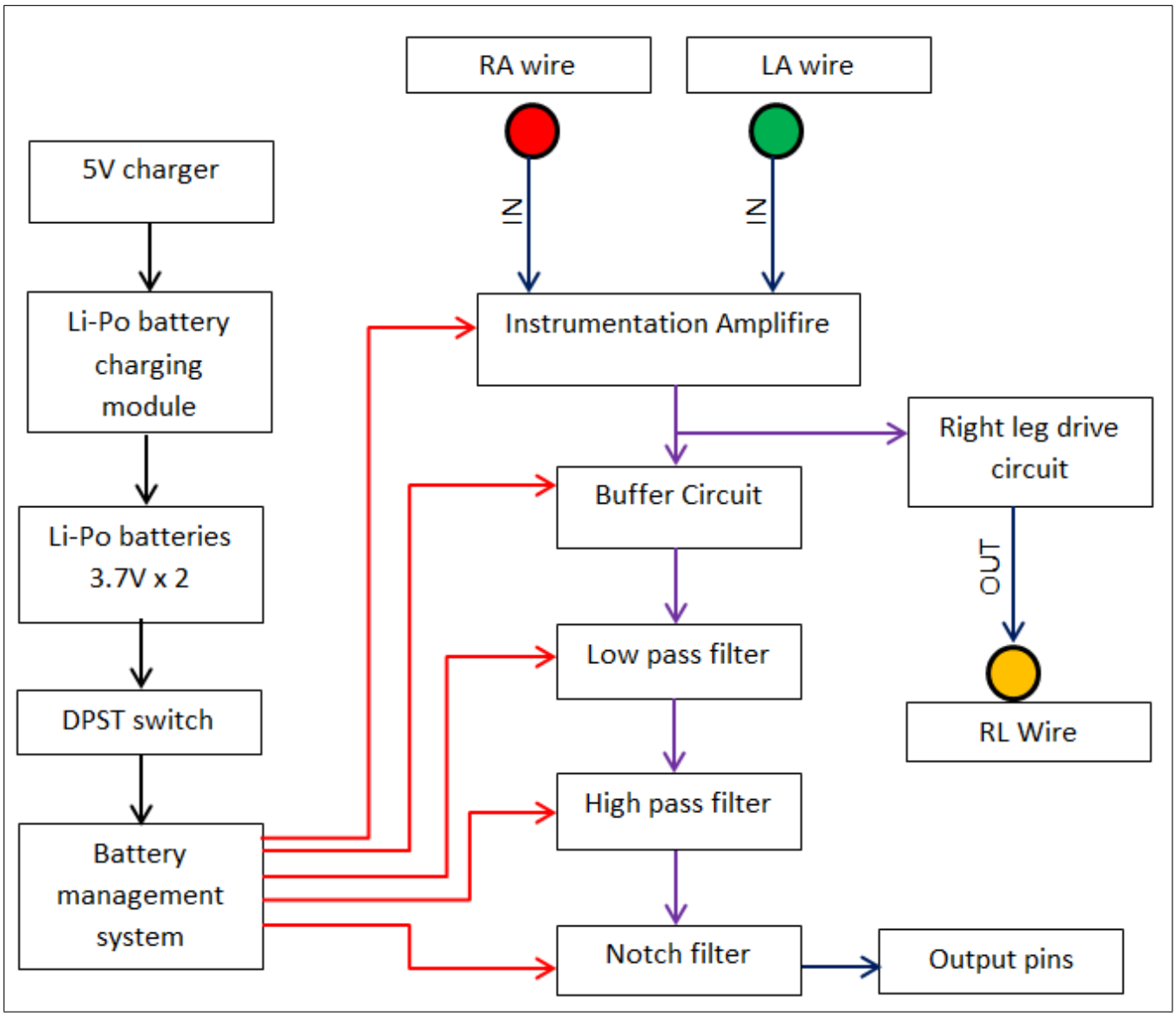

5. Electrical Specifications

All measurements taken at $T_A = 25°C$, $V_S = \pm 3.7$V, and $f_{signal} = 10$Hz unless otherwise noted.

Parameter	Min	Typical	Max	Unit
Supply Characteristics				
Supply Voltage Rails	±3	±3.7	±4.2	V
Supply Current (I_{CC})	-	17	-	mA
Input Characteristics				
Input ECG Range	0	-	5	mV_{pp}
Input Impedance (Z_{IN})	-	8.5	-	MΩ
Input Offset Voltage	-	< 85	-	μV
CMRR	-	120	-	dB
Performance				
Differential Gain	1140	-	1900	V/V
Bandwidth (-3dB)	0.072	-	160	Hz
Notch Frequency	49	50	51	Hz
Output Characteristics				
Output Voltage Swing	-2.85	-	+2.85	V
Output Offset Voltage	-	< 10	-	mV
Output Impedance (Z_{OUT})	-	0.5	-	Ω

6. Pin / Connector Descriptions

- **Left Arm Electrode (LA):** ECG signal input from left side of the body.
- **Right Arm Electrode (RA):** ECG signal input from right side of the body.
- **Right Leg Electrode (RL):** feeds back an inverted common-mode signal to the body to suppress power-line and common-mode noise.
- **Analog Output:** Filtered and Amplified ECG signal
- **Power Input(Charging):** 5V DC

7. Mechanical Specifications

7.1 Physical Characteristics

Parameter	Value
PCB Dimensions	65 mm × 57 mm (Approx - Measure this!)
PCB Thickness	1.6 mm (Standard FR4)
Mounting Holes	4 × 3.2 mm (Fits M3 Screws)
Enclosure Dimensions	110 mm × 80 mm × 60 mm
Weight	≈ 150 g (with battery)

7.2 Connector Layout

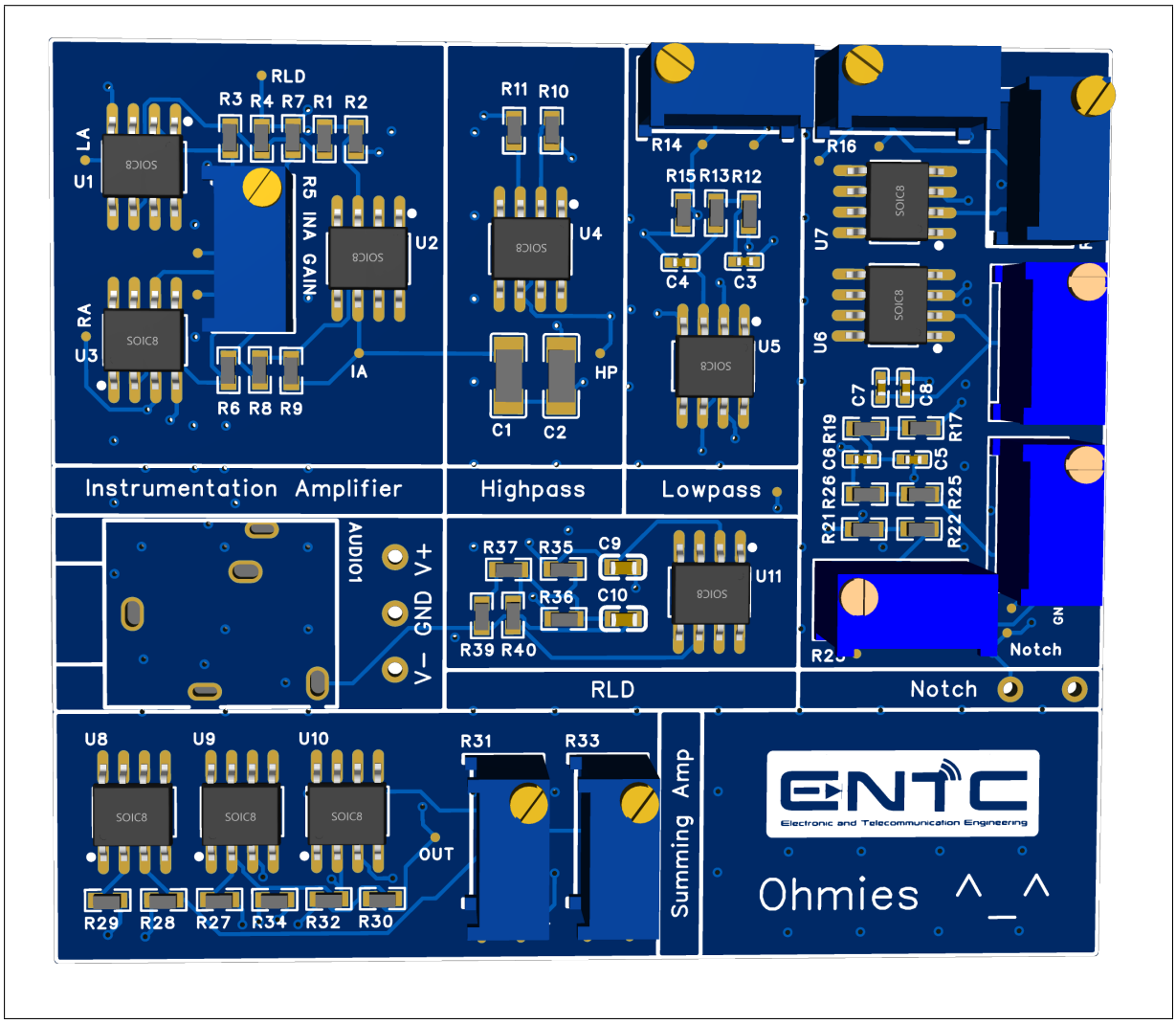

- Input the ECG signal into the audio-in port, which connects to AUDIO01 via a 3.5mm audio jack.
- connect Dual supply ground into "GND", and dual supply positive and negative into "V+" and "V-".
- Connect the output pins to the end of the notch filter.

7.3 Material Specifications

- **PCB Material:** FR4 Standard, 1oz Copper, 4-Layer Stackup.
- **Enclosure Material:** PLA (Polylactic Acid) - 3D Printed.
- **Electrode Connectors:** Standard 3-pin headers / 3.5mm Jack.

8. Typical ECG Output Waveform

9. Safety Notes

- Device is intended for educational and experimental use only.
- Not certified for clinical, diagnostic, or therapeutic use.
- Do not use on patients with pacemakers or other electronic medical implants.
- Avoid using the device in wet or damp environments to prevent electrical hazards.
- Always check electrode connections before powering the device.
- Do not disassemble the device while it is powered.
- Keep out of reach of children.
- Use only the recommended charger. (5V battery charger.)
- Disconnect the device immediately if any abnormal heating, smoke, or odor is detected.

10. Revision History

Version	**Date**	**Description**
1.0	December 11, 2025	Initial release