CanSat Dual Redundant System

Project Work: Short Report

1. Project Overview

This report details the avionics architecture and physical integration for a CanSat aerospace module. The design strictly adheres to a dual-redundant, fail-safe architecture, bridging electronics and mechanical design to reflect real launch vehicle subsystems. The system ensures mission-critical fault tolerance by utilizing completely independent primary and backup control systems on a single printed circuit board.

2. Avionics Schematic Design

The logic of the system is built on total isolation between the Primary and Secondary Microcontrollers (MCUs).

Key Design Features:

- **Complete Isolation:** MCU-1 (Primary) and MCU-2 (Secondary) do not share any control pins.
- **Sensor Allocation:** The primary system utilizes an independent I^2C bus for Altimeter-1 and IMU-1, while the secondary system utilizes a separate bus for Altimeter-2 and IMU-2.
- **Power Distribution:** Power from the Li-Po battery is regulated via two distinct paths. A 5V regulator exclusively powers the servos, ensuring mechanical current spikes do not cause logic brownouts. A 3.3V regulator powers the MCUs and sensors, utilizing separate net labels (3V3_SENS_PRI and 3V3_SENS_SEC) to enforce separate physical power routing to the sensor banks.

Final Avionics Schematic:

3. PCB Layout and Integration

The physical board layout was designed to mitigate electrical interference and thermal issues while fitting within a compact aerospace mechanical footprint.

Component Placement Strategy:

- **Spatial Separation:** MCU-1 and its corresponding sensors (U6, U8) are grouped on the top half of the board, while MCU-2 and its sensors (U7, U9) are grouped on the bottom half. This prevents data traces from crossing and ensures clean, independent routing.

- **Edge Interfaces:** All external interfaces, including the power switch, battery connector, programming headers, and servo headers, are located along the perimeter for accessible integration with the CanSat mechanical structure.

PCB Footprint Layout (Top View):

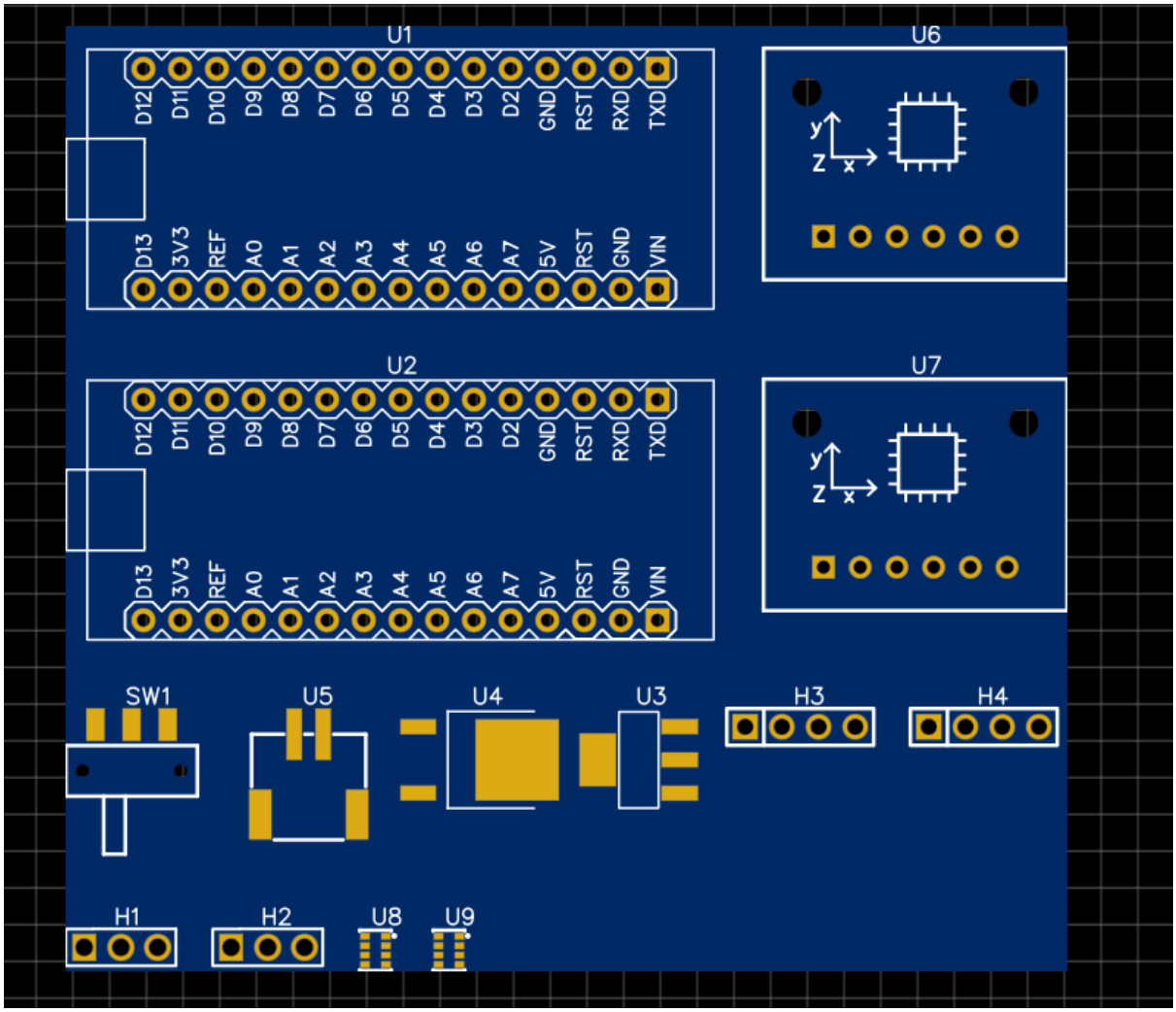

PCB Logical Connections (Ratlines):

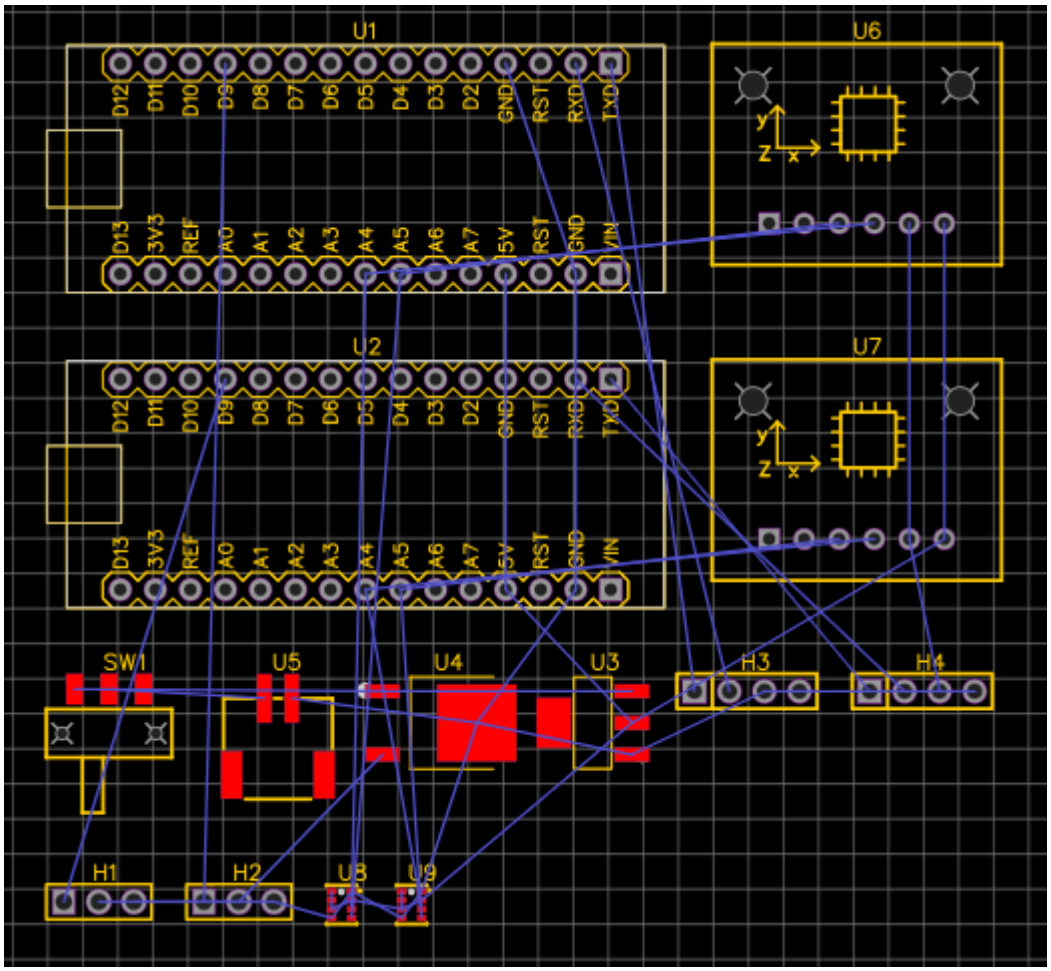

4. 3D Board Verification

The generated 3D model verifies the spatial clearances of all components. Both Arduino Nanos are seated with enough clearance to access their USB ports, and the sensor banks remain unobstructed for airflow within the mechanical sensor vents.

3D PCB Render:

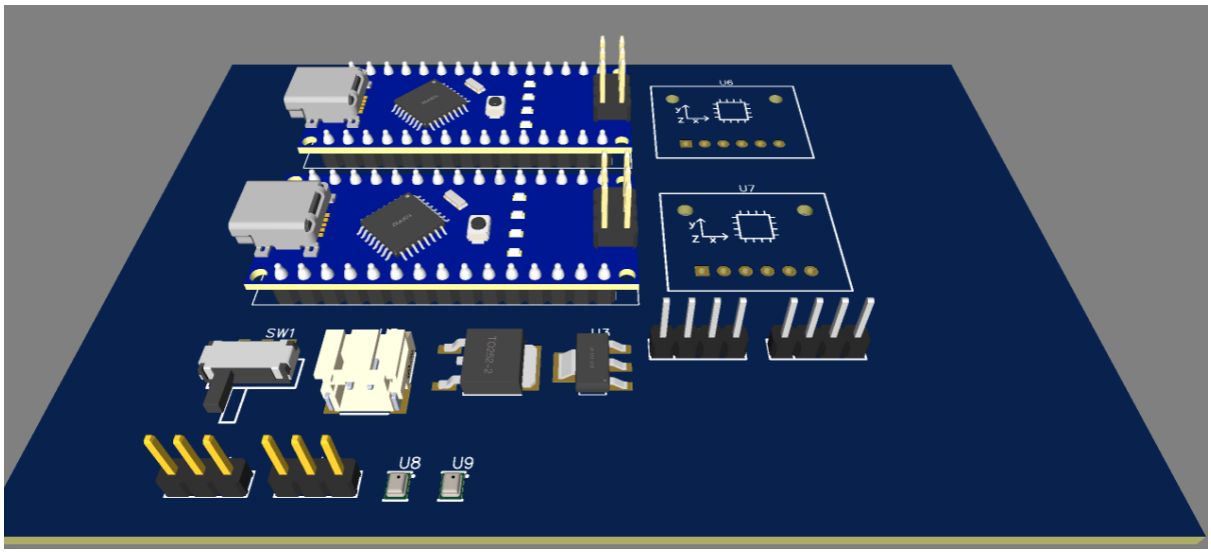

5. System Rule Verification Checklist

The following mission-critical constraints were strictly followed and verified in the final design:

- [X] **Single Board:** All components are mounted to ONE PCB.
- [X] **Simultaneous Power:** Both MCUs are powered at the same time.
- [X] **Pin Isolation:** No MCU shares control pins.
- [X] **Sensor Redundancy:** No sensor sharing; separate I²C buses and power lines are utilized.
- [X] **Servo Redundancy:** No servo sharing; each has its own PWM pin and dedicated 5V power routing.
- [X] **Control Mapping:** One MCU = one sensor set = one servo.
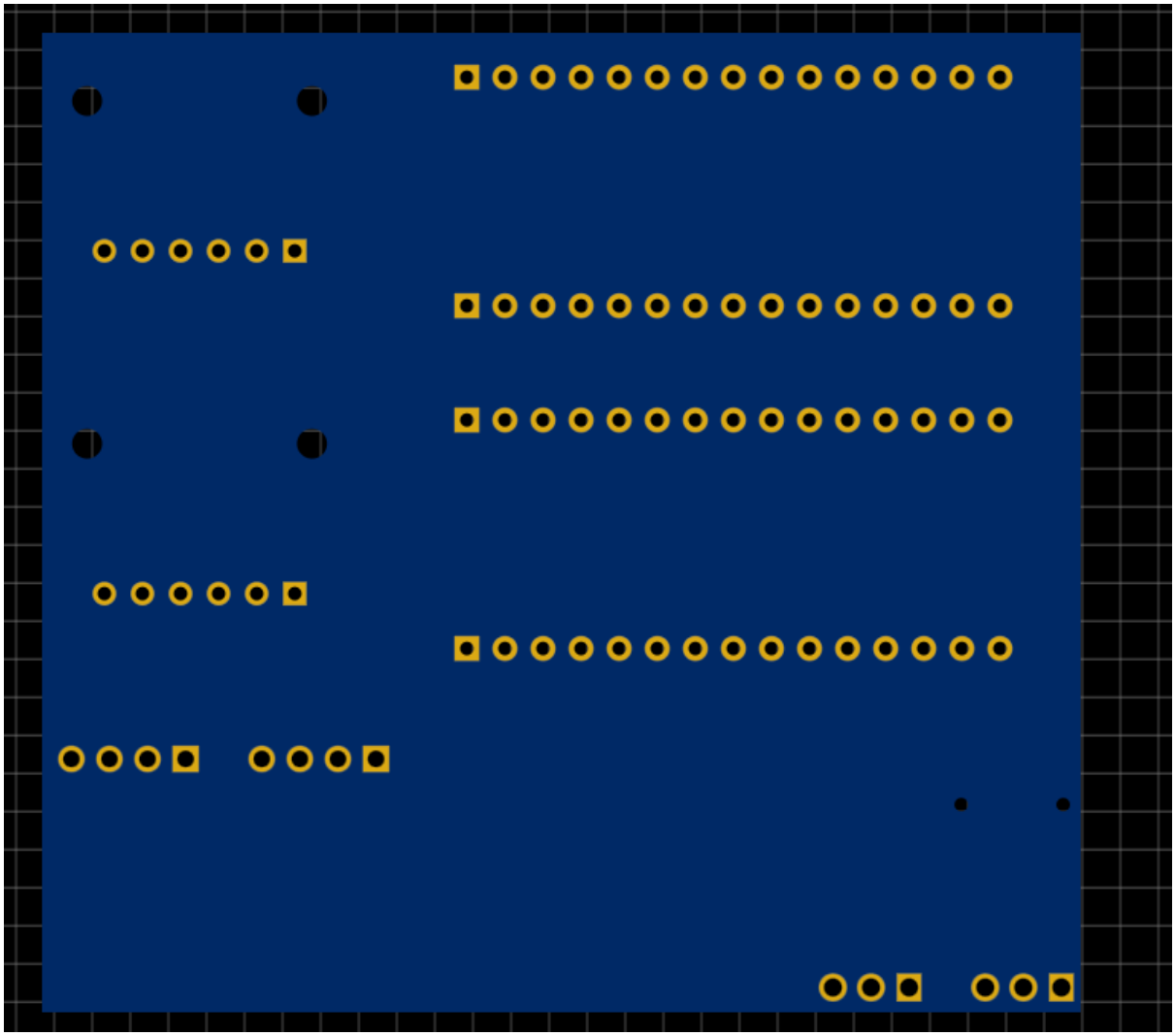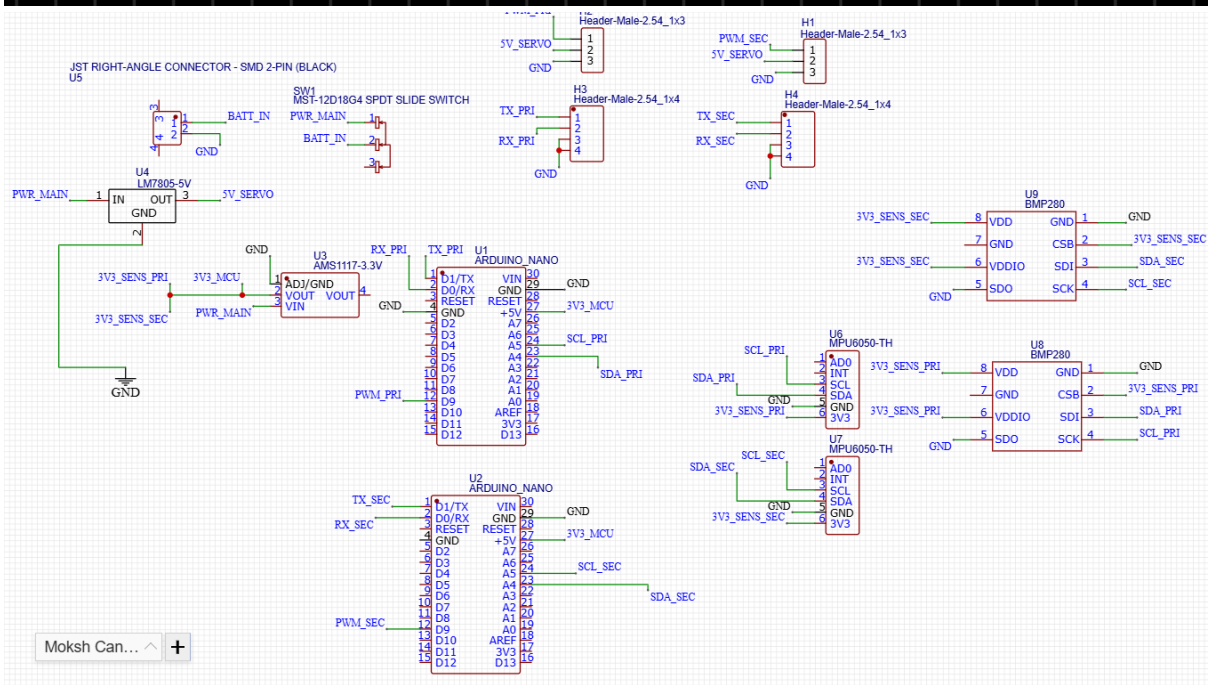
Additional Images: