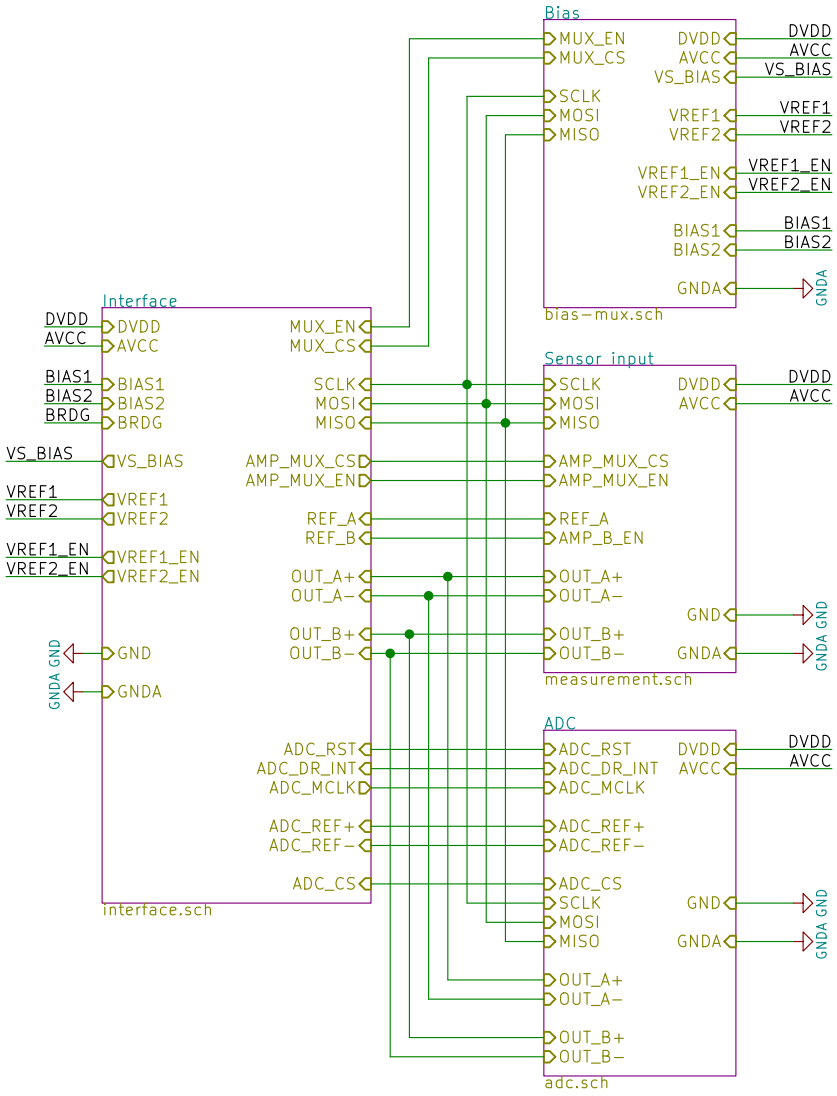

Sheet: /
File: thermistor-measurement-board.sch

Title:

Size: A4	Date:	**Rev:**
KiCad E.D.A. kicad 4.0.1-stable		Id: 1/5

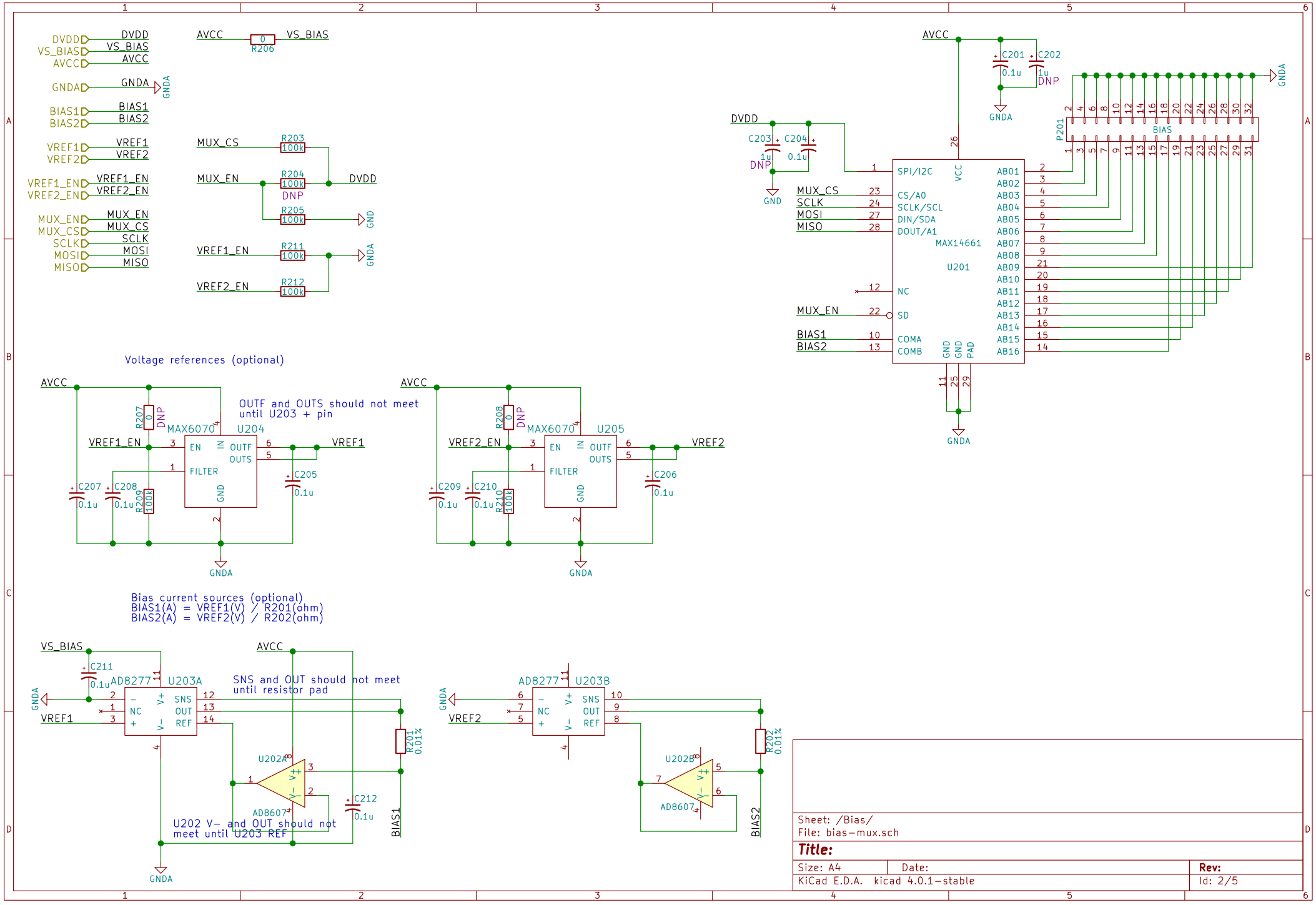
DVDD
VS_BIAS
AVCC
GNDA
BIAS1
BIAS2
VREF1
VREF2
VREF1_EN
VREF2_EN
MUX_EN
MUX_CS
SCLK
MOSI
MISO
R206
0
MUX_CS
MUX_EN
VREF1_EN
VREF2_EN
R203
R204
R205
R211
R212
100k
DNP
GND
C201
C202
C203
C204
0.1u
1u
P201
BIAS
SPI/I2C
CS/A0
SCLK/SCL
DIN/SDA
DOUT/A1
NC
SD
COMA
COMB
VCC
GND
PAD
MAX14661
U201
AB01
AB02
AB03
AB04
AB05
AB06
AB07
AB08
AB09
AB10
AB11
AB12
AB13
AB14
AB15
AB16
Voltage references (optional)
OUTF and OUTS should not meet
until U203 + pin
MAX6070
U204
U205
EN
IN
OUTF
OUTS
FILTER
R207
R208
R209
R210
C205
C206
C207
C208
C209
C210
VREF1
VREF2
Bias current sources (optional)
BIAS1(A) = VREF1(V) / R201(ohm)
BIAS2(A) = VREF2(V) / R202(ohm)
AD8277
U203A
U203B
SNS
OUT
REF
SNS and OUT should not meet
until resistor pad
U202A
U202B
AD8607
C211
C212
R201
R202
0.01%
U202 V− and OUT should not
meet until U203 REF
Sheet: /Bias/
File: bias−mux.sch
Title:
Size: A4
Date:
Rev:
KiCad E.D.A. kicad 4.0.1−stable
Id: 2/5

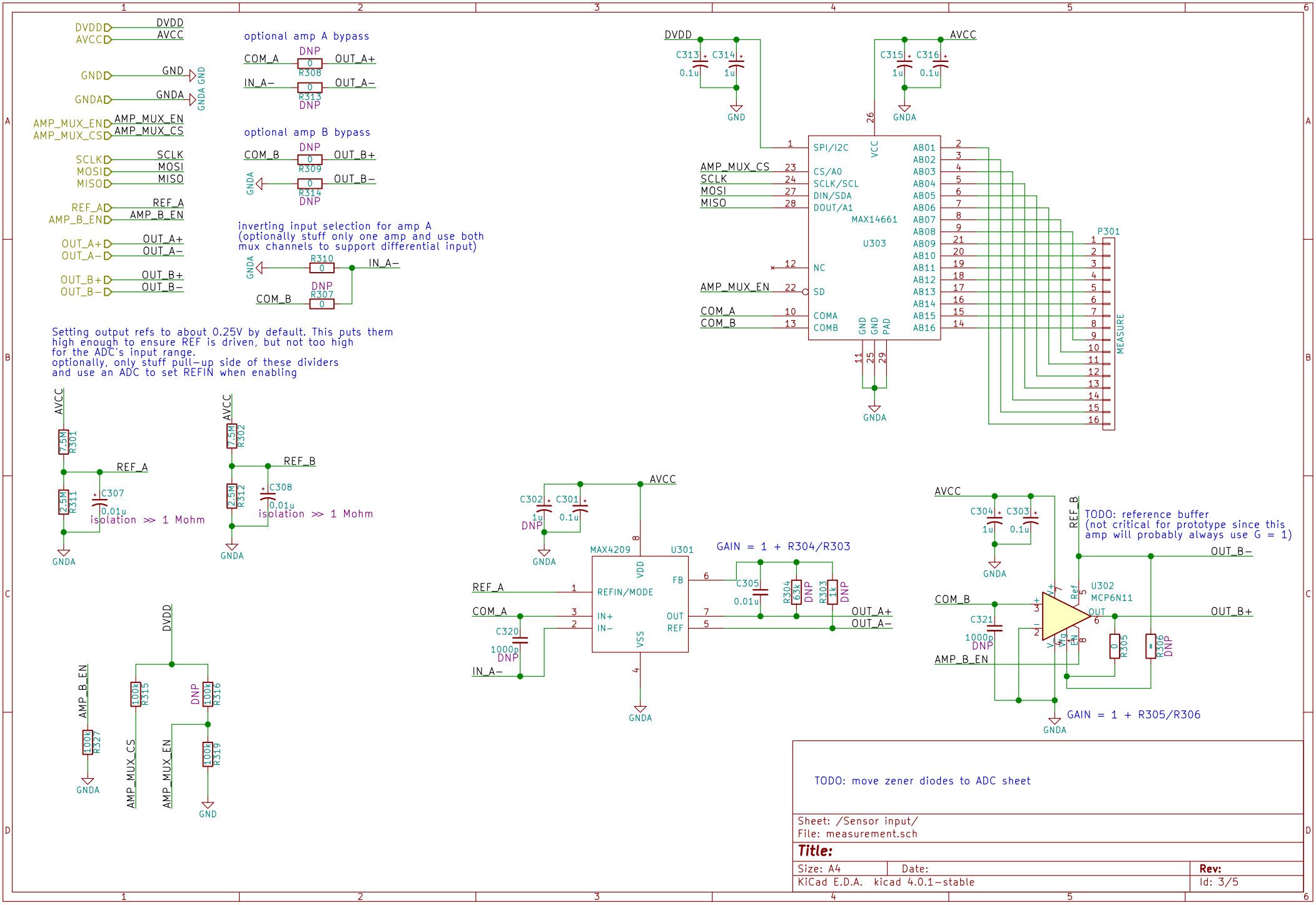
DVDD
AVCC
GND
GNDA
AMP_MUX_EN
AMP_MUX_CS
SCLK
MOSI
MISO
REF_A
AMP_B_EN
OUT_A+
OUT_A−
OUT_B+
OUT_B−
optional amp A bypass
COM_A
IN_A−
R308
R313
DNP
optional amp B bypass
COM_B
R309
R314
inverting input selection for amp A
(optionally stuff only one amp and use both
mux channels to support differential input)
R310
R307
Setting output refs to about 0.25V by default. This puts them
high enough to ensure REF is driven, but not too high
for the ADC's input range.
optionally, only stuff pull−up side of these dividers
and use an ADC to set REFIN when enabling
7.5M R301
2.5M R311
C307
0.01u
isolation >> 1 Mohm
7.5M R302
2.5M R312
C308
C313
C314
C315
C316
0.1u
1u
SPI/I2C
CS/A0
SCLK/SCL
DIN/SDA
DOUT/A1
MAX14661
U303
VCC
NC
SD
COMA
COMB
GND
PAD
AB01
AB02
AB03
AB04
AB05
AB06
AB07
AB08
AB09
AB10
AB11
AB12
AB13
AB14
AB15
AB16
P301
MEASURE
C302
C301
MAX4209
U301
VDD
REFIN/MODE
IN+
IN−
FB
OUT
REF
VSS
GAIN = 1 + R304/R303
C305
R304
63k
R303
1k
C320
1000p
100k R315
100k R316
100k R319
100k R327
C304
C303
TODO: reference buffer
(not critical for prototype since this
amp will probably always use G = 1)
U302
MCP6N11
C321
R305
R306
GAIN = 1 + R305/R306
TODO: move zener diodes to ADC sheet
Sheet: /Sensor input/
File: measurement.sch
Title:
Size: A4
Date:
Rev:
KiCad E.D.A. kicad 4.0.1−stable
Id: 3/5

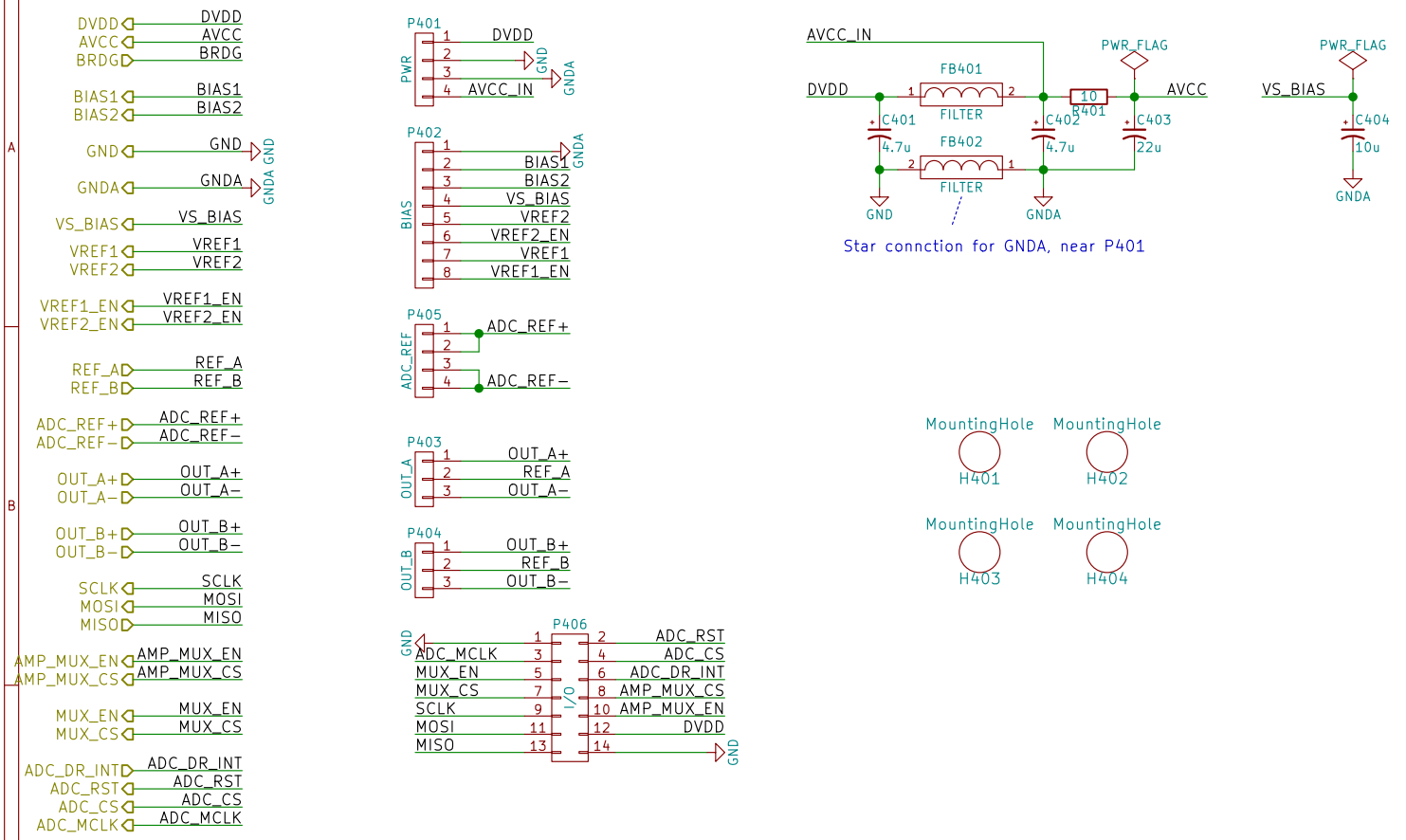

Sheet: /Interface/
File: interface.sch

Title:

Size: A4	Date:	Rev:
KiCad E.D.A. kicad 4.0.1-stable		Id: 4/5

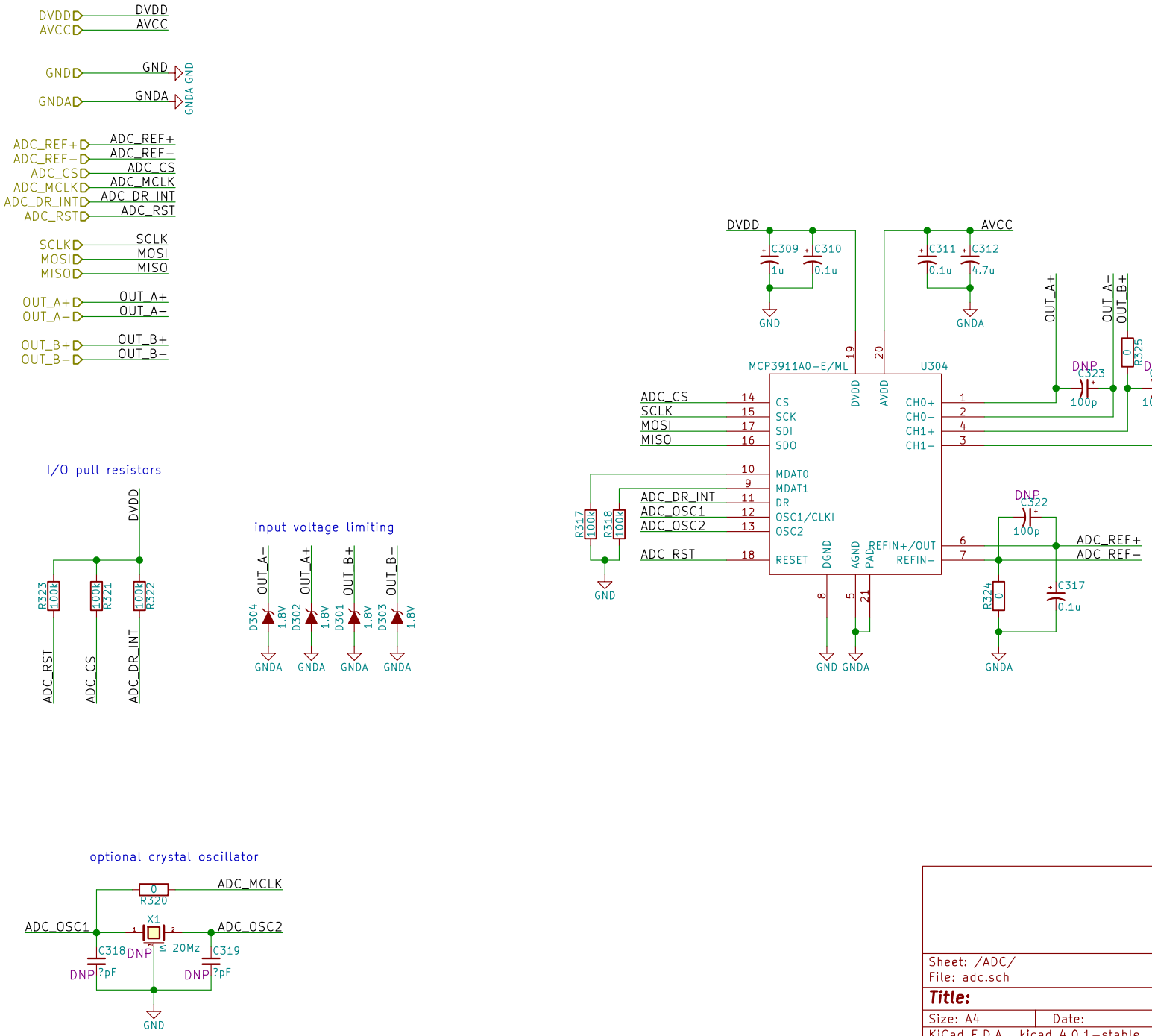

Sheet: /ADC/
File: adc.sch

Title:

Size: A4	Date:	Rev:
KiCad E.D.A. kicad 4.0.1-stable		Id: 5/5