Advanced Data Acquisition System Using ARM7 LPC2129 Microcontroller

Molakathalla Chakradhar Reddy
Independent Researcher
molakathallachakradhar@gmail.com

Abstract-- Data acquisition systems are essential in modern engineering for monitoring and analyzing real-time physical parameters. This paper presents the design and implementation of an advanced data acquisition system using the ARM7-based LPC2129 microcontroller. The system acquires temperature data using an LM35 sensor, processes it using an integrated analog-to-digital converter (ADC), and displays the output on a 16×2 LCD. Multiple communication protocols such as UART, SPI, I2C, and CAN are implemented to ensure efficient data transmission. The proposed system demonstrates reliability, accuracy, and scalability, making it suitable for industrial and IoT-based applications.

***Index Terms* - Data Acquisition System, LPC2129, ARM7, Embedded Systems, ADC, Communication Protocols.**

I. INTRODUCTION

In today's technology-driven world, data acquisition systems (DAS) play a vital role in collecting and processing real-time data from physical environments. These systems are widely used in industrial automation, environmental monitoring, and embedded applications. A DAS typically consists of sensors, signal conditioning circuits, analog-to-digital converters, and processing units.

With the advancement of embedded systems, microcontroller-based data acquisition systems have become more efficient and cost-effective. This paper focuses on the design of an advanced data acquisition system using the LPC2129 ARM7 microcontroller. The system is capable of acquiring temperature data, processing it, and displaying the results while also supporting multiple communication protocols for data transfer.

II. SYSTEM ARCHITECTURE

The proposed system is designed to acquire real-time temperature data and process it efficiently. It consists of a temperature sensor, LPC2129 microcontroller, ADC module, LCD display, and communication interfaces.

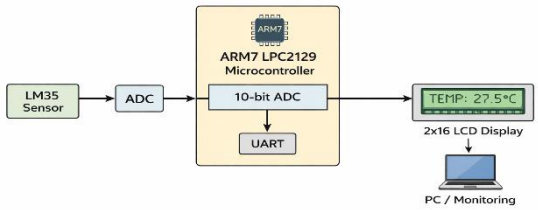

Fig. 1. Block diagram of the proposed data acquisition system using LPC2129 microcontroller.

The LM35 temperature sensor converts temperature into an analog voltage signal. This signal is fed into the ADC of the microcontroller, where it is converted into a digital value. The microcontroller processes this data and displays the temperature on a 16×2 LCD. Additionally, the system transmits the data through UART for monitoring and supports SPI, I2C, and CAN protocols for extended communication.

III. HARDWARE IMPLEMENTATION

The LPC2129 microcontroller operates as the core unit responsible for data acquisition and processing. It integrates an ARM7TDMI-S processor with on-chip peripherals, making it suitable for real-time embedded applications. The built-in 10-bit ADC enables direct interfacing with analog sensors without the need for external conversion circuitry.

The LM35 temperature sensor is selected due to its linear voltage output proportional to temperature, which simplifies signal processing. The sensor output is connected to an ADC input pin of the LPC2129, allowing continuous monitoring of temperature variations. The analog signal is converted into a digital value and processed by the microcontroller to obtain accurate temperature readings.

A 16×2 LCD module is interfaced with the microcontroller in 4-bit mode to optimize GPIO usage. The LCD provides a user-friendly interface to display real-time temperature values and system status.

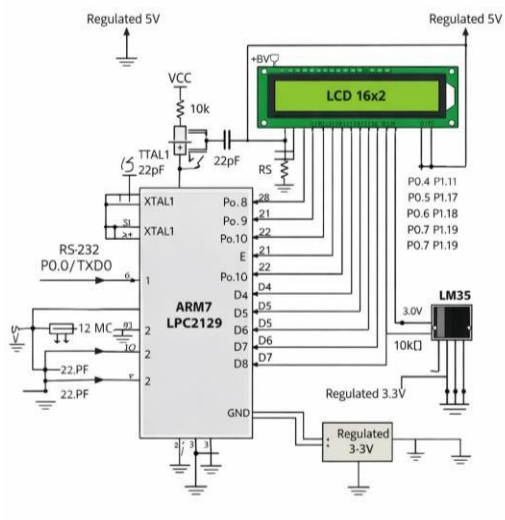

Fig. 2. Hardware implementation of the proposed data acquisition system using LPC2129 microcontroller.

The system is powered using a regulated 5V supply, while the microcontroller operates at 3.3V, ensuring safe and stable operation. Voltage regulation and proper grounding are implemented to minimize noise and improve ADC accuracy.

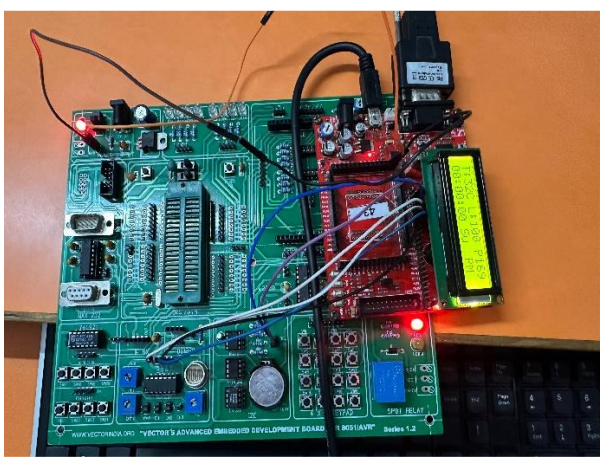

Fig. 3. Real-time hardware implementation of the proposed data acquisition system using LPC2129 microcontroller.

In addition to sensing and display, the hardware supports communication interfaces such as UART for serial data transmission. This allows the system to send acquired data to external devices such as computers or monitoring systems. The modular hardware design enables easy expansion by integrating additional sensors and communication modules in future applications.

IV. SOFTWARE IMPLEMENTATION

The system software is developed using Embedded C in the Keil µVision Integrated Development Environment (IDE). The software is structured in a modular manner, with separate driver functions implemented for each peripheral including ADC, UART, SPI, I2C, CAN, and LCD modules.

The ADC module is configured to continuously sample the analog signal from the LM35 temperature sensor. The acquired digital data is processed using appropriate conversion formulas to obtain temperature values in degrees Celsius. The processed data is then displayed on the 16×2 LCD in real time.

The UART module is initialized to enable serial communication between the microcontroller and external devices such as a computer. This allows continuous transmission of temperature data for monitoring and debugging purposes. The main program operates in a loop, where it reads sensor data, processes it, updates the display, and transmits the results. Proper delay mechanisms and timing control are implemented to ensure stable and accurate readings.

V. RESULTS AND DISCUSSION

The proposed data acquisition system was tested under various temperature conditions ranging from 25°C to 40°C to evaluate its performance and reliability. The ADC module produced stable and consistent digital outputs corresponding to the analog input from the LM35 temperature sensor, demonstrating accurate signal conversion. The temperature values were displayed on the LCD in real time with minimal delay, ensuring effective monitoring of environmental conditions. The system exhibited low response time, reliable operation, and good accuracy of approximately ±1°C, with minimal noise and fluctuations observed during testing. These results confirm that the proposed system is efficient, stable, and suitable for real-time temperature monitoring and embedded data acquisition applications.

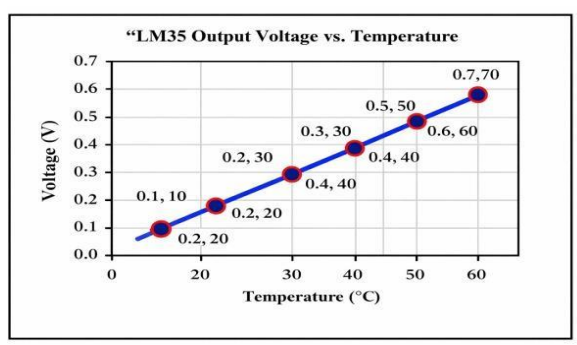

Fig. 4 illustrates the linear relationship between LM35 output voltage and temperature, validating the accuracy of the system.

VI. CONCLUSION

This paper presented the design and implementation of an advanced data acquisition system using the ARM7 LPC2129 microcontroller. The system successfully acquires temperature data from the LM35 sensor, processes it using the built-in ADC, and displays the results on a 16×2 LCD in real time. The implementation of communication interfaces such as UART enables efficient data transmission and monitoring. Experimental results demonstrate that the system provides accurate, reliable, and stable performance with minimal response time. The linear relationship between sensor output voltage and temperature confirms the effectiveness of the data acquisition process. The proposed system is suitable for real-time monitoring applications and can be further extended for IoT-based remote monitoring and industrial automation systems.

The system can be effectively extended for smart street lighting and smart city applications, contributing to energy efficiency and automation.

VII. REFERENCES

[1] NXP Semiconductors, "LPC2129 User Manual," 2006.

[2] ARM Ltd., "ARM7TDMI-S Technical Reference Manual," 2005.

[3] Texas Instruments, "LM35 Precision Centigrade Temperature Sensors Datasheet," 2017.

[4] Keil Software, "µVision IDE User Guide," 2024.

[5] Flash Magic, "Flash Magic User Guide," 2024.

[6] M. Barr and A. Massa, Programming Embedded Systems, 2nd ed. Sebastopol, CA, USA: O'Reilly Media, 2006.

[7] S. Heath, Embedded Systems Design, 2nd ed. Burlington, MA, USA: Newnes, 2003.

[8] Wikipedia Contributors, "Data Acquisition," 2024. [Online]. Available: https://en.wikipedia.org/wiki/Data_acquisition.

[9] H. Zhang et al., "Smart Street Lighting System Based on IoT," IEEE Internet of Things Journal, 2020.

[10] A. Kumar and P. Singh, "Energy Efficient Smart Street Lighting System Using Wireless Sensor Networks," International Journal of Engineering Research & Technology (IJERT), 2019.

[11] S. K. Sharma, "Wireless Communication Technologies for Smart Applications," Elsevier, 2018.

VIII. FUTURE WORK

The proposed advanced data acquisition system can be further enhanced for smart street lighting applications to improve energy efficiency and automation. Future improvements may include the integration of wireless communication technologies such as Wi-Fi, Bluetooth, Zigbee, or GSM modules to enable remote monitoring and control of street lights. This would allow centralized management through cloud platforms and mobile applications, making the system suitable for smart city and Internet of Things (IoT) environments.

Additionally, the system can be extended by incorporating multiple sensors such as light-dependent resistors (LDR) for automatic brightness control, motion sensors for detecting vehicle or pedestrian movement, and environmental sensors to monitor parameters like temperature and air quality. This would enable adaptive lighting, where street lights operate efficiently based on real-time conditions.

Data logging functionality can be implemented using external memory or cloud storage to track energy consumption and system performance over time. This data can be used for analysis and optimization of power usage.

Furthermore, the use of advanced microcontrollers or embedded platforms can enhance system performance and enable the implementation of intelligent algorithms. Machine learning techniques can be applied for predictive maintenance, fault detection, and traffic-based lighting control.

Improving power management through the use of solar panels and energy-efficient LED lighting systems can make the solution more sustainable and cost-effective. These enhancements will significantly expand the applicability of the system in smart street lighting, urban infrastructure, and energy-efficient city development.