CHAPTER 2

PROBLEMS INVOLVING SELECTION

INTRODUCTION

This chapter deals with problems involving decision-making. This process of decision-making is implemented through a logic structure called *selection*. Here a *predicate*, also called a *condition*, is tested to see if it is true or false. If it is true, a course of action is specified for it; if it is found to be false, an alternative course of action is expressed. We can express this process using flowchart notation.

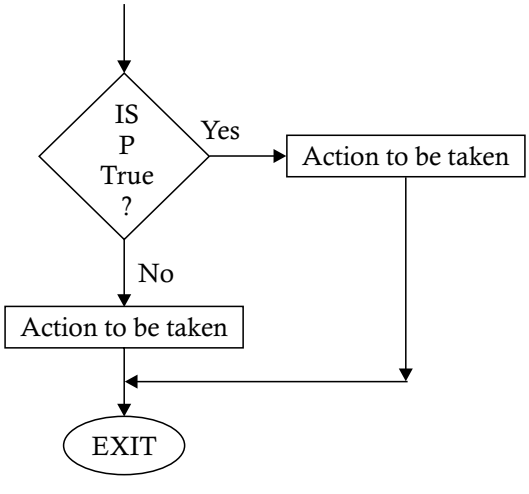

Note that a course of action may involve one or more sequences of operations, and there should be a common meeting point to satisfy the single rule

Copyright © 2020. Mercury Learning & Information. All rights reserved.

Chaudhuri, A.B., Flowchart and Algorithm Basics : The Art of Programming, Mercury Learning & Information, 2020. ProQuest Ebook Central, http://ebookcentral.proquest.com/lib/univ-people-ebooks/detail.action?docID=6404903.
Created from univ-people-ebooks on 2026-01-30 11:09:50.

pointed to by the connector containing the word "Exit." A flowchart may contain any number of decision boxes depending on the processing requirements, and the boxes may appear in any sequence depending on the program logic decided. For example, a number of decision boxes may follow one another. The following flowcharts provide an explanation of the logic to clarify this concept.

Problem 2.1. *Develop a flowchart to show how the profit or loss for a sale can be obtained.*

Task Analysis. The profit or loss for a sale can be obtained if the cost price and sale price are known. However, there is a need to make a decision here. If the cost price is more than the sale price, then it indicates a loss in the process; otherwise, there will be either zero profit (no profit or a loss) or some profit.

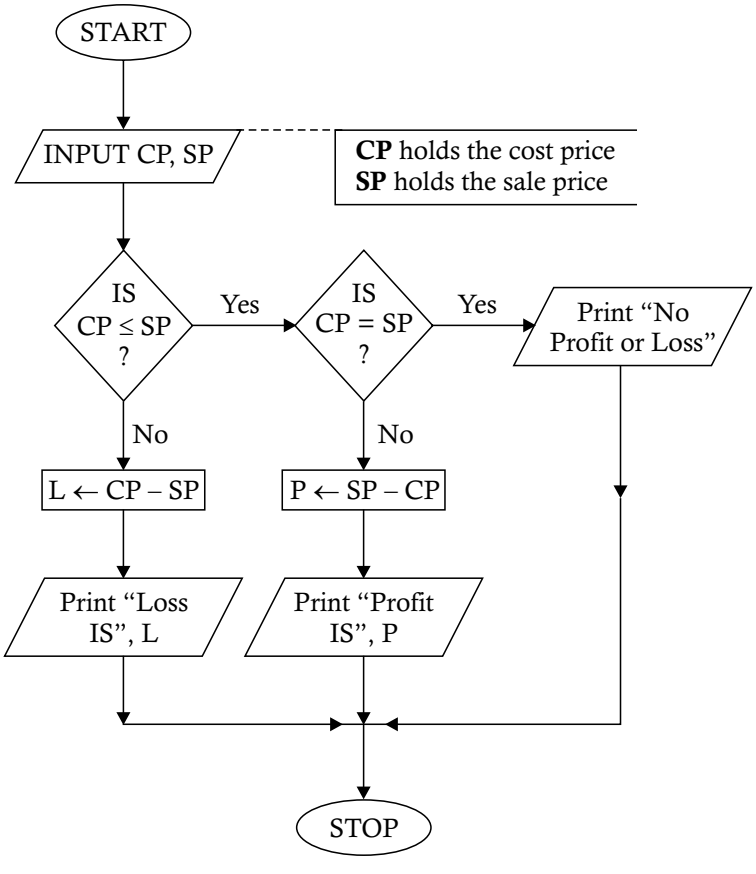

The algorithm corresponding to Problem 2.1 is given below:

Step 1. INPUT TO CP, SP
Step 2. IF CP <= SP

Copyright © 2020. Mercury Learning & Information. All rights reserved.

Chaudhuri, A.B., Flowchart and Algorithm Basics : The Art of Programming, Mercury Learning & Information, 2020. ProQuest Ebook Central, http://ebookcentral.proquest.com/lib/univ-people-ebooks/detail.action?docID=6404903.
Created from univ-people-ebooks on 2026-01-30 11:09:50.

```
            THEN
                IF CP = SP
                    PRINT "NO PROFIT OR LOSS"
                ELSE
            COMPUTE P ← SP – CP
                PRINT "PROFIT IS"; P
            END-IF
        ELSE
            COMPUTE L ← CP – SP
            PRINT "LOSS IS"; L
        END-IF
Step 3. STOP
```

Problem 2.2. *Construct a procedure to show how to determine the greater of two given numbers.*

Task Analysis. We must determine the larger of two numbers. The task is to compare the given numbers to find the greater of them.

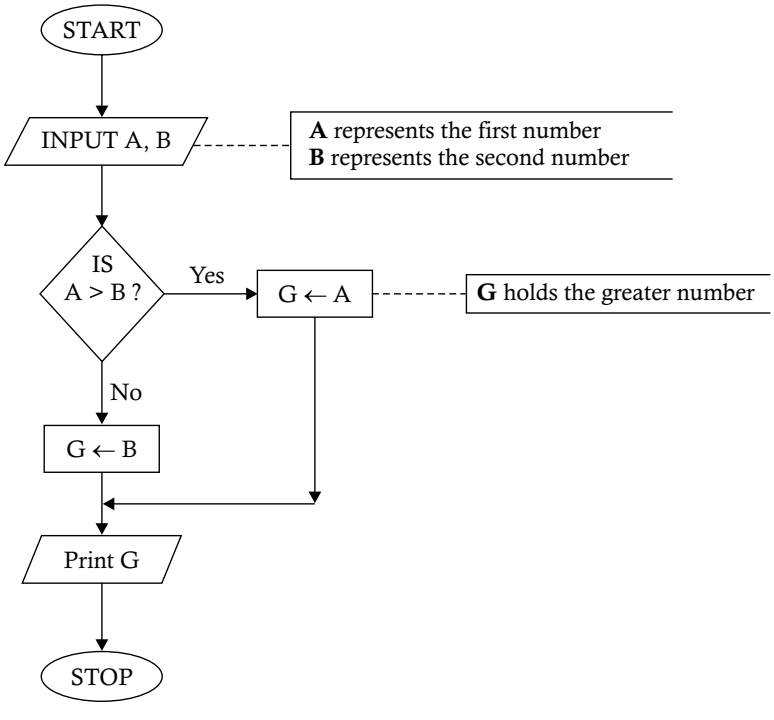

Note: Here we have assumed that the given numbers are different numbers.

Copyright © 2020. Mercury Learning & Information. All rights reserved.

Chaudhuri, A.B., Flowchart and Algorithm Basics : The Art of Programming, Mercury Learning & Information, 2020. ProQuest Ebook Central, http://ebookcentral.proquest.com/lib/univ-people-ebooks/detail.action?docID=6404903.
Created from univ-people-ebooks on 2026-01-30 11:09:50.
Flowchart and Algorithm Basics_C01-02_Page 21 6/12/2020 2:37:04 PM

The algorithm corresponding to Problem 2.2 is given below:

Step 1. INPUT TO A, B
Step 2. IF A > B
    THEN G ← A
ELSE
    G ← B
END-IF
Step 3. PRINT G
Step 4. STOP

Problem 2.3. *Construct a flowchart to determine whether a given number is even or odd.*

Task Analysis. We know that a number is an even number if it is completely divisible by 2. This means that if we perform integer division upon the given number, then the remainder of the division will be zero. To construct the flowchart, we accept a number as input, obtain the remainder of the integer division by taking it as the divisor, and then check whether the remainder is zero. If it is zero, then our conclusion will be that the number is an even number; otherwise, it will be an odd number.

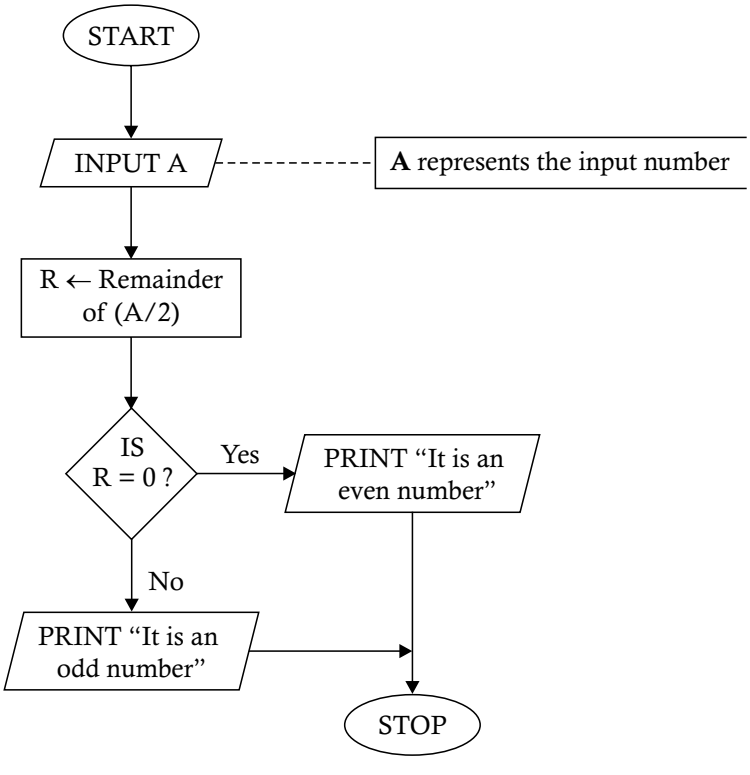

Copyright © 2020. Mercury Learning & Information. All rights reserved.

Chaudhuri, A.B., Flowchart and Algorithm Basics : The Art of Programming, Mercury Learning & Information, 2020. ProQuest Ebook Central, http://ebookcentral.proquest.com/lib/univ-people-ebooks/detail.action?docID=6404903.
Created from univ-people-ebooks on 2026-01-30 11:09:50.
Flowchart and Algorithm Basics_C9-02.indd 22 6/12/2020 2:37:04 PM

The algorithm corresponding to Problem 2.3 is shown below:

Step 1. INPUT TO A
Step 2. COMPUTE R ← Remainder of (A/2)
Step 3. IF R = 0
    THEN PRINT "It is an even number."
  ELSE
    PRINT "It is an odd number."
  END-IF
Step 4. STOP

Problem 2.4. *Determine the net payable amount on a sale. The net payable amount consists of the sale price plus sales tax. The sales tax is decided as*

a. *8% of the sale price for national items*

b. *18% of the sale price for foreign items*

Construct a flowchart to show how the net payable amount is determined.

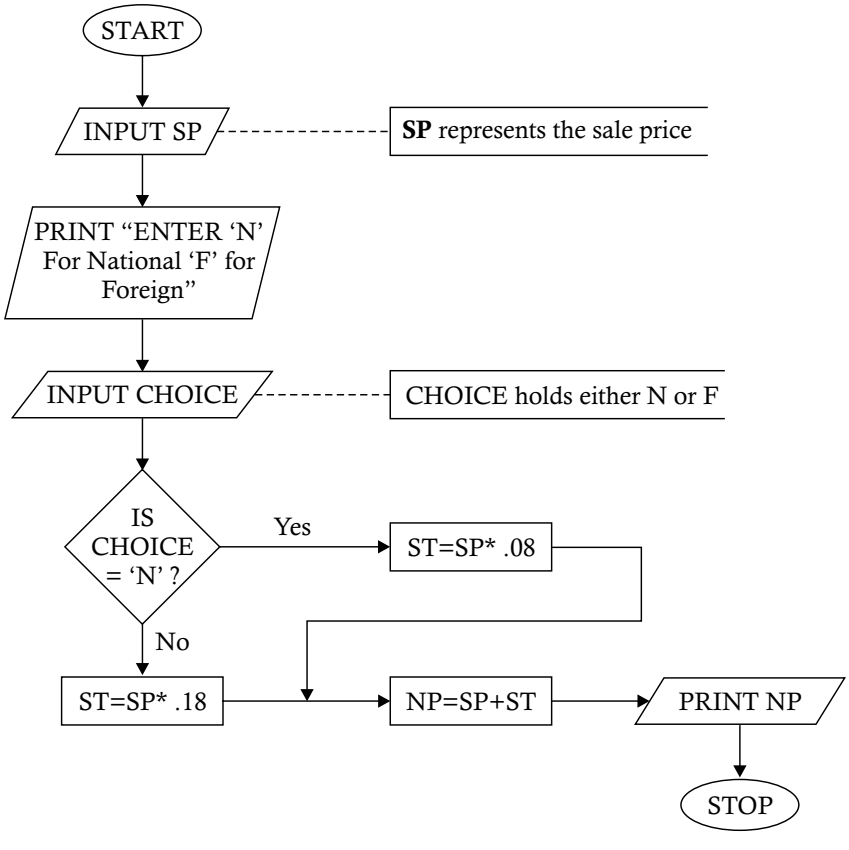

Copyright © 2020. Mercury Learning & Information. All rights reserved.

Chaudhuri, A.B., Flowchart and Algorithm Basics : The Art of Programming, Mercury Learning & Information, 2020. ProQuest Ebook Central, http://ebookcentral.proquest.com/lib/univ-people-ebooks/detail.action?docID=6404903.
Created from univ-people-ebooks on 2026-01-30 11:09:50.

Task Analysis. We need to calculate the sales tax first by taking one of the two given rates. For this purpose, we require two inputs: the sale price of the item under consideration and the origin of the item. Let us assume that we provide "N" or "F" as the input to indicate "national" or "foreign," respectively.

The algorithm corresponding to Problem 2.4 is shown below:

Step 1. INPUT TO SP
Step 2. INPUT TO CHOICE ("N" for national and "F" for foreign)
Step 3. IF CHOICE = "N"
    THEN COMPUTE ST ← SP*.08
  ELSE
    COMPUTE ST ← SP*.18
  END-IF
    COMPUTE NP ← NP+ST
Step 4. PRINT NP
Step 5. STOP

Problem 2.5. *An equation with the form $ax^2 + bx + c = 0$ is known as a quadratic equation. Draw a flowchart to show how to solve a quadratic equation.*

Task Analysis. The values a, b, and c in the equation represent constant values. So $4x^2 - 17x - 15 = 0$ represents a quadratic equation where $a = 4$, $b = -17$, and $c = -15$. The values of x that satisfy a particular quadratic equation are known as the roots of the equation. The roots may be calculated by substituting the values of a, b, and c into the following two formulas:

$$x_1 = (-b + \sqrt{b^2 - 4ac}) / 2a$$
$$x_2 = (-b + \sqrt{b^2 - 4ac}) / 2a$$

The expression $b^2 - 4ac$ is called the *determinant* of the equation because it determines the nature of the roots of the equation. If the value of the determinant is less than zero, then the roots of the equation x_1 and x_2, are imaginary (complex) numbers. To solve a quadratic equation, we should allow the user to enter the values for a, b, and c. If the discriminant is less than zero, then a message should be displayed stating that the roots are imaginary; otherwise, the program should proceed to calculate and display the two roots of the equation.

The algorithm corresponding to Problem 2.5 is as follows:

Step 1. INPUT TO A, B, C
Step 2. COMPUTE D ← (B*B – 4*A*C) (Calculate the value of the discriminant) and store in D

Copyright © 2020. Mercury Learning & Information. All rights reserved.

Chaudhuri, A.B. Flowchart and Algorithm Basics : The Art of Programming, Mercury Learning & Information, 2020. ProQuest Ebook Central, http://ebookcentral.proquest.com/lib/univ-people-ebooks/detail.action?docID=6404903.
Created from univ-people-ebooks on 2026-01-30 11:09:50.
Flowchart and Algorithm Basics_C9-02.indd 24 6/12/2020 2:37:06 PM

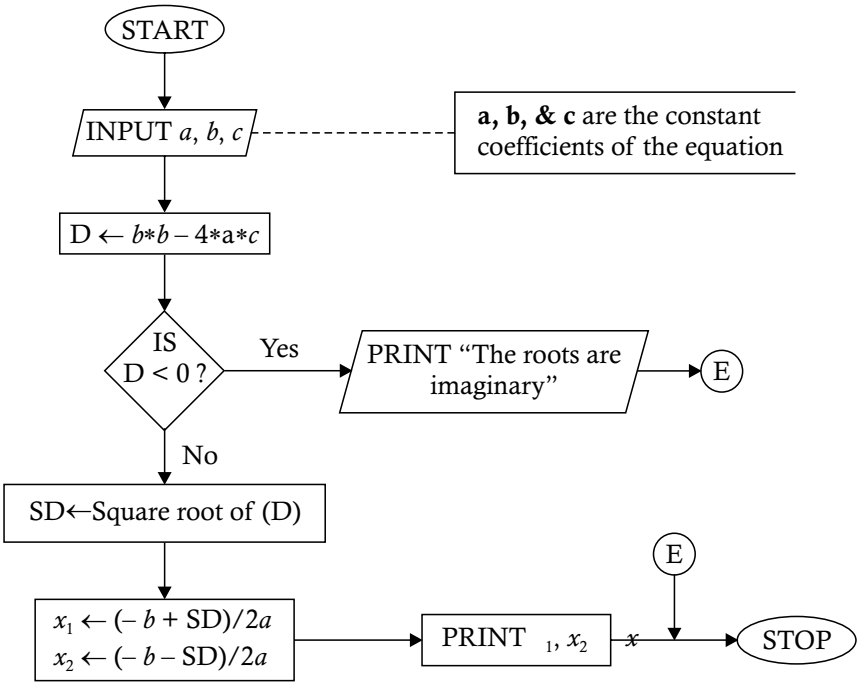

Step 3. IF D < 0
THEN PRINT "THE ROOTS ARE IMAGINARY"
ELSE
COMPUTE SD ← SQUARE-ROOT (D)
END-IF
Step 4. COMPUTE XI ← (– *b* + SD)/2*A
Step 5. COMPUTE X2 ← (– *b* – SD)/2*A
Step 6. PRINT XI, X2
Step 7. STOP

Problem 2.6. *Write a program to categorize the shape of a quadrilateral as either a square, rhombus, rectangle, parallelogram, or irregular quadrilateral, having input the lengths of the four sides and one internal angle.*

Task Analysis. To make the decision about the shape of a quadrilateral, we need to know the definitions of the quadrilaterals. A quadrilateral is called a square if all the sides are of equal length and each of the internal angles is a right angle. A quadrilateral is called a rhombus if the lengths of all sides are the same and no angle is a right angle. If only one internal angle is given and the sides are given, then in the case where all sides are of the same length and the internal angle is not a right angle, then the quadrilateral must be a

Copyright © 2020. Mercury Learning & Information. All rights reserved.

Flowchart and Algorithm Basics_C91-02 Index 25
Chaudhuri, A.B. Flowchart and Algorithm Basics : The Art of Programming, Mercury Learning & Information, 2020. ProQuest Ebook Central, http://ebookcentral.proquest.com/lib/univ-people-ebooks/detail.action?docID=6404903.
Created from univ-people-ebooks on 2026-01-30 11:09:50.
6/12/2020 2:37:07 PM

rhombus. If the internal angle is a right angle and the sides are of same length, then it must be a square. If the opposite sides are of the same length and the internal angle is a right angle, then it must be a rectangle; if the opposite sides are of same length and the internal angle is not a right angle, then it must be a parallelogram. If none of the above conditions are satisfied, then the quadrilateral is an irregular quadrilateral. The steps of the logic are shown in the flowchart.

The algorithm corresponding to Problem 2.6 is given below.

AB, BC, CD, and DA are the lengths of the sides of a quadrilateral and I is the measure of an internal angle. This algorithm decides the shape of the quadrilateral.

```
Step 1.  ACCEPT AB, BC, CD, DA, I
Step 2.  IF AB = BC
            THEN IF AB = CD
                 THEN IF BC = DA
                      THEN IF I = 90
                           THEN PRINT "IT'S A SQUARE"
                        ELSE
                           PRINT "IT'S A RHOMBUS"
                        END-IF
                      ELSE
                         PRINT "IT'S AN IRREGULAR QUADRILATERAL"
                      END-IF
                      ELSE
                         PRINT "IT'S AN IRREGULAR QUADRILATERAL"
                      END-IF
         ELSE
                 IF AB = CD
                    THEN IF BC = DA
                           THEN IF I = 90
                                  THEN PRINT "IT'S A RECTANGLE"
                                ELSE
                                  PRINT "IT'S A PARALLELOGRAM"
                                END-IF
                         ELSE
                           PRINT "IT'S AN IRREGULAR QUADRILATERAL"
                         END-IF
                 ELSE
                      PRINT "IT'S AN IRREGULAR QUADRILATERAL"
         END-IF
Step 3.  STOP
```

Copyright © 2020. Mercury Learning & Information. All rights reserved.

Chaudhuri, A.B., Flowchart and Algorithm Basics : The Art of Programming, Mercury Learning & Information, 2020. ProQuest Ebook Central, http://ebookcentral.proquest.com/lib/univ-people-ebooks/detail.action?docID=6404903.
Created from univ-people-ebooks on 2026-01-30 11:09:50.
Flowchart and Algorithm Basics_C01-02.indd 26 6/12/2020 2:37:07 PM

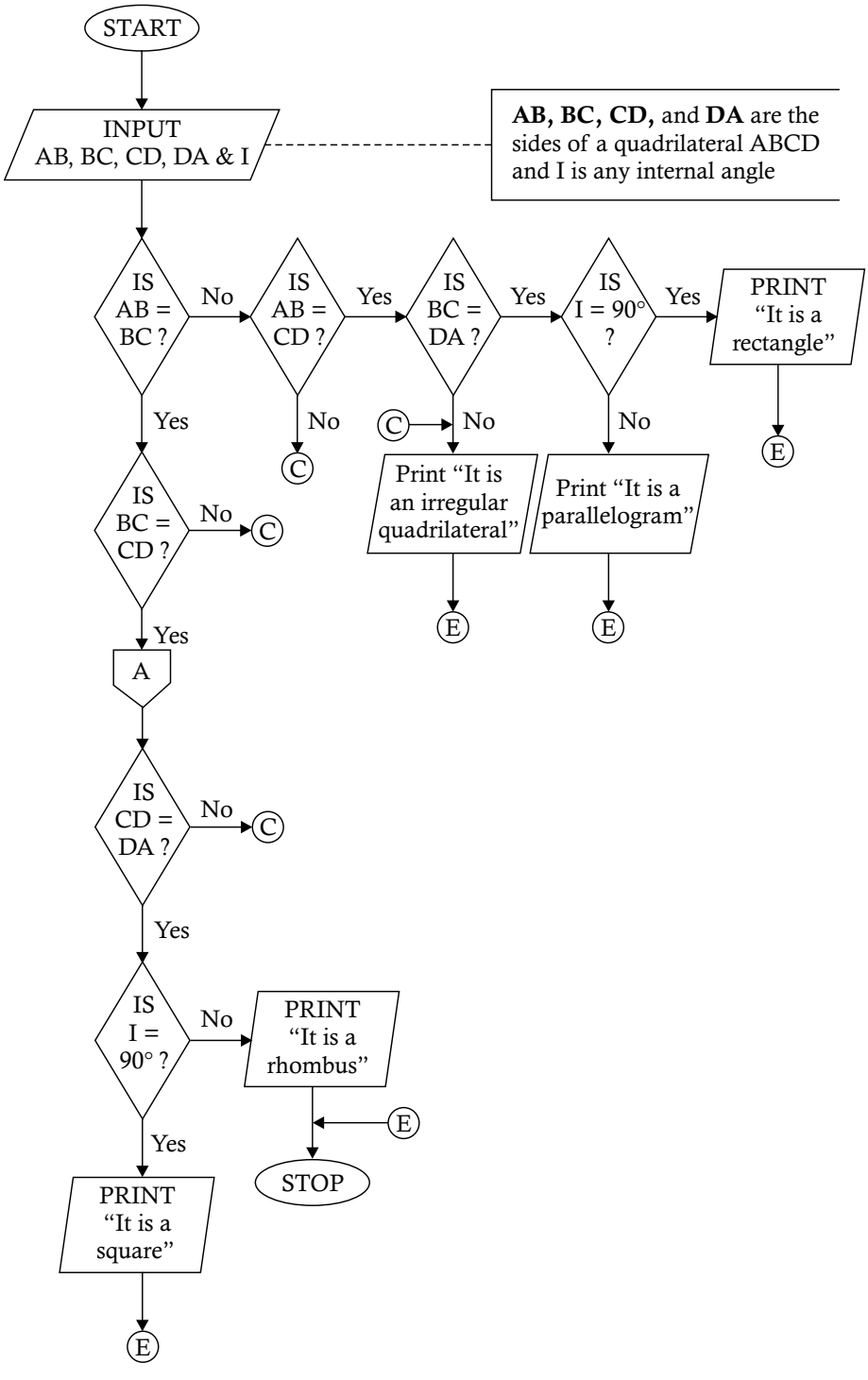

Copyright © 2020. Mercury Learning & Information. All rights reserved.

Chaudhuri, A B, Flowchart and Algorithm Basics : The Art of Programming, Mercury Learning & Information, 2020. ProQuest Ebook Central, http://ebookcentral.proquest.com/lib/univ-people-ebooks/detail.action?docID=6404903.
Created from univ-people-ebooks on 2026-01-30 11:09:50.

Problem 2.7. *The grades in a certain class are determined by coursework and a written examination. Both components of the assessment carry a maximum of 50 points.*

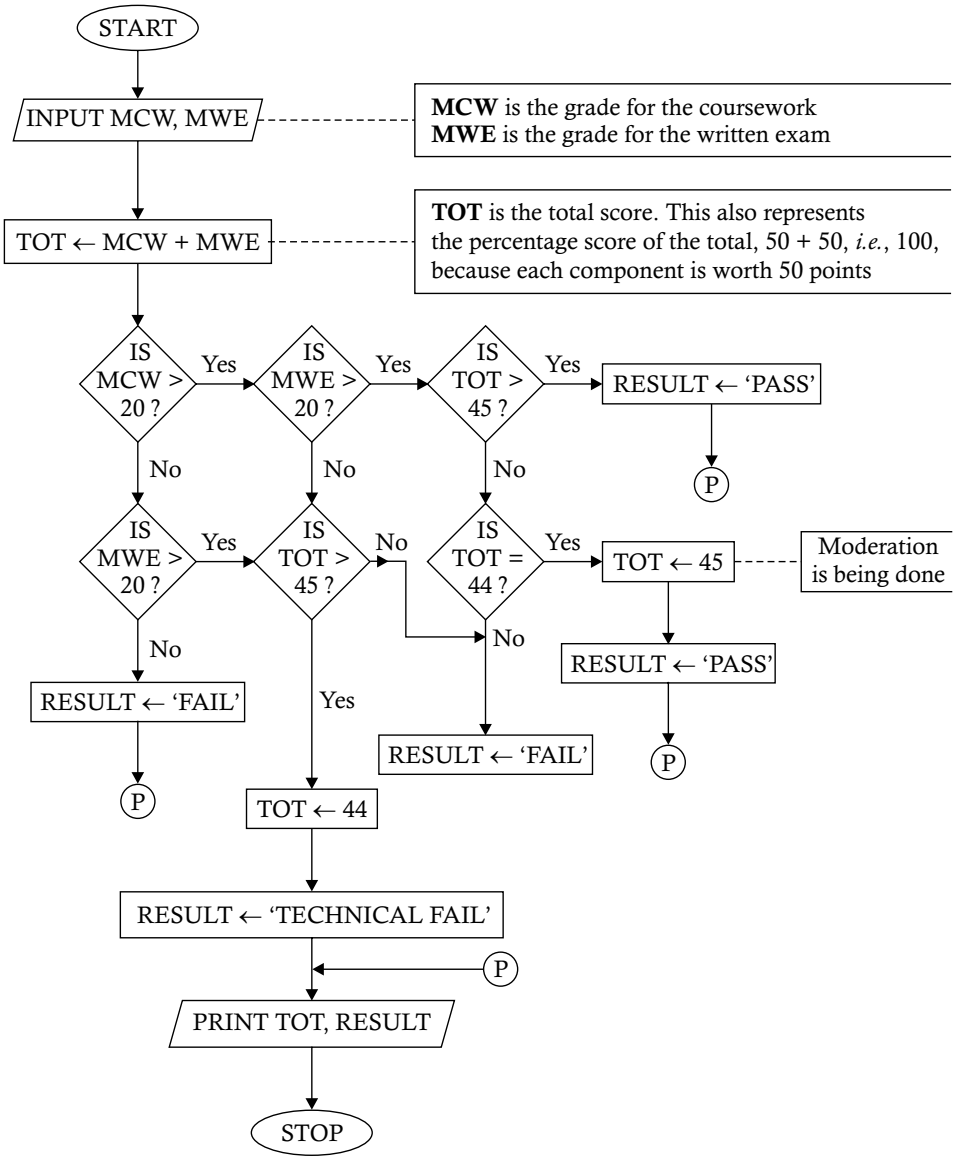

The following rules are applied by the examiners to determine whether a student passes:

Copyright © 2020. Mercury Learning & Information. All rights reserved.

Chaudhuri, A.B., Flowchart and Algorithm Basics : The Art of Programming, Mercury Learning & Information, 2020. ProQuest Ebook Central, http://ebookcentral.proquest.com/lib/univ-people-ebooks/detail.action?docID=6404903.
Created from univ-people-ebooks on 2026-01-30 11:09:50.

(i) *A student must score a total of 45% or more in order to pass*
(ii) *A total grade of 44% is moderated to 45%*
(iii) *Each component must be passed with a minimum of 20 points*
(iv) *If a student scores 45% or more, but does not achieve the minimum grade in one component, he is given a technical fail of 44%, which is not moderated to 45%.*

Develop a flowchart showing how to input the grades for each component and output the final grade and the result.

Task Analysis. The readily available facts about a student are the grades obtained for the coursework and written examination. These can be supplied as the input to obtain the desired output. The procedure includes finding the total score and then checking to determine whether it is "pass," "fail," or "technical fail." A *moderation, i.e.*, an increment, of the final score is also done, if required, when a student obtains a total score of 44%. Our objective is to show the solution interactively for one student at a time. No input is needed to identify the student.

The algorithm corresponding to Problem 2.7 is given below:

Step 1. INPUT TO MCW, MWE (Accept the grades of the coursework and that of the written examination)
Step 2. TOT ← MCW + MWE (Store the sum of MCW and MWE in TOT)
Step 3. IF MCW > 20

```
    THEN IF MWE > 20
            THEN IF TOT > 45
                    THEN RESULT ← "Pass"
                            (Store "PASS" in RESULT)
                    ELSE
                       IF TOT = 44
                            THEN RESULT ← 45
                                (Moderation of 44 to make it 45)
                                  RESULT ← "PASS"
                       ELSE
                            RESULT ← "FAIL"
                       END-IF
                         END-IF
                    ELSE
                       IF TOT > 45
                         THEN
                            TOT ← 44
```

Copyright © 2020. Mercury Learning & Information. All rights reserved.

Chaudhuri, A.B., Flowchart and Algorithm Basics : The Art of Programming, Mercury Learning & Information, 2020. ProQuest Ebook Central, http://ebookcentral.proquest.com/lib/univ-people-ebooks/detail.action?docID=6404903.
Created from univ-people-ebooks on 2026-01-30 11:09:50.
Flowchart and Algorithm Basics_C01-02.indd 29 6/12/2020 2:37:07 PM

```
                                        RESULT ← "TECHNICAL FAIL"
                                    END-IF
                                END-IF
                        ELSE
                            IF MWE > 20
                                THEN
                                TOT ← 44
                                    RESULT ← "TECHNICAL FAIL"
                            END-IF
                END-IF
Step 4.  PRINT TOT, RESULT
Step 5.  STOP
```

Problem 2.8. *The following rules are used to calculate the bonus for the employees of an organization.*

(i) *If the pay is more than $3,000, the bonus amount is fixed, and it is equal to $300.*
(ii) *If the pay is more than $1,600, but less than or equal to $3,000, the bonus will be 10% of the pay subject to a maximum of $240.*
(iii) *If the pay is less than or equal to $1,600, the bonus is 15% of pay, subject to a minimum of $100.*

Task Analysis. The input required here is the pay amount that an employee gets. On the basis of the pay, we can determine the bonus amount. The "subject to maximum" or the "subject to minimum" clause implies that the calculated amount should be compared with the maximum or minimum limit. If it is more than the maximum limit or less than the minimum limit, then the maximum limit or the minimum limit will be treated as the legitimate value.

The algorithm corresponding to Problem 2.8 is given below:

```
Step 1.  INPUT TO PAY
Step 2.  IF PAY > 3000
             THEN BONUS ← 300
         ELSE
             IF PAY > 1600
                 THEN BONUS ← PAY* 10/100
                         IF BONUS > 240
                             THEN
                                 BONUS ← 240
                         END-IF
                 ELSE
```

Copyright © 2020. Mercury Learning & Information. All rights reserved.

Chaudhuri, A.B., Flowchart and Algorithm Basics : The Art of Programming, Mercury Learning & Information, 2020. ProQuest Ebook Central, http://ebookcentral.proquest.com/lib/univ-people-ebooks/detail.action?docID=6404903.
Created from univ-people-ebooks on 2026-01-30 11:09:50.
Flowchart and Algorithm Basics_C01-02.indd 30 6/12/2020 2:37:07 PM

```
                BONUS ← PAY* 15/100
                  IF BONUS < 100
                    BONUS ← 100
                  END-IF
              END-IF
          END-IF
Step 3.   PRINT BONUS
Step 4.   STOP
```

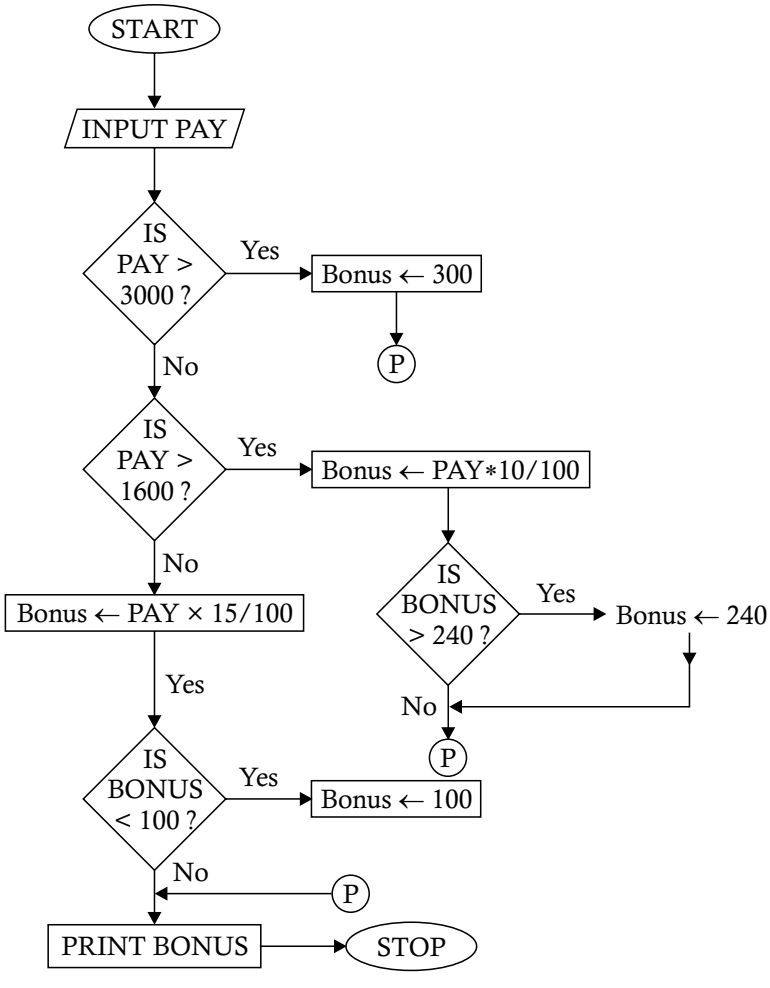

Copyright © 2020. Mercury Learning & Information. All rights reserved.

Chaudhuri, A B, Flowchart and Algorithm Basics : The Art of Programming, Mercury Learning & Information, 2020. ProQuest Ebook Central, http://ebookcentral.proquest.com/lib/univ-people-ebooks/detail.action?docID=6404903.
Created from univ-people-ebooks on 2026-01-30 11:09:50.
Flowchart and Algorithm Basics_C01-02.indd 31 6/12/2020 2:37:07 PM

Problem 2.9. *A certain steel is graded according to the following conditions:*

(i) *Rockwell hardness > 50*
(ii) *Carbon content > 0.7*
(iii) *Tensile strength > 5600 kg/cm*^{2}

The steel is graded as follows:

a. *Grade 10, if all the conditions are satisfied*
b. *Grade 9, if conditions (i) and (ii) are satisfied*
c. *Grade 8, if conditions (ii) and (iii) are satisfied*
d. *Grade 7, if conditions (i) and (iii) are satisfied*
e. *Grade 0, otherwise*

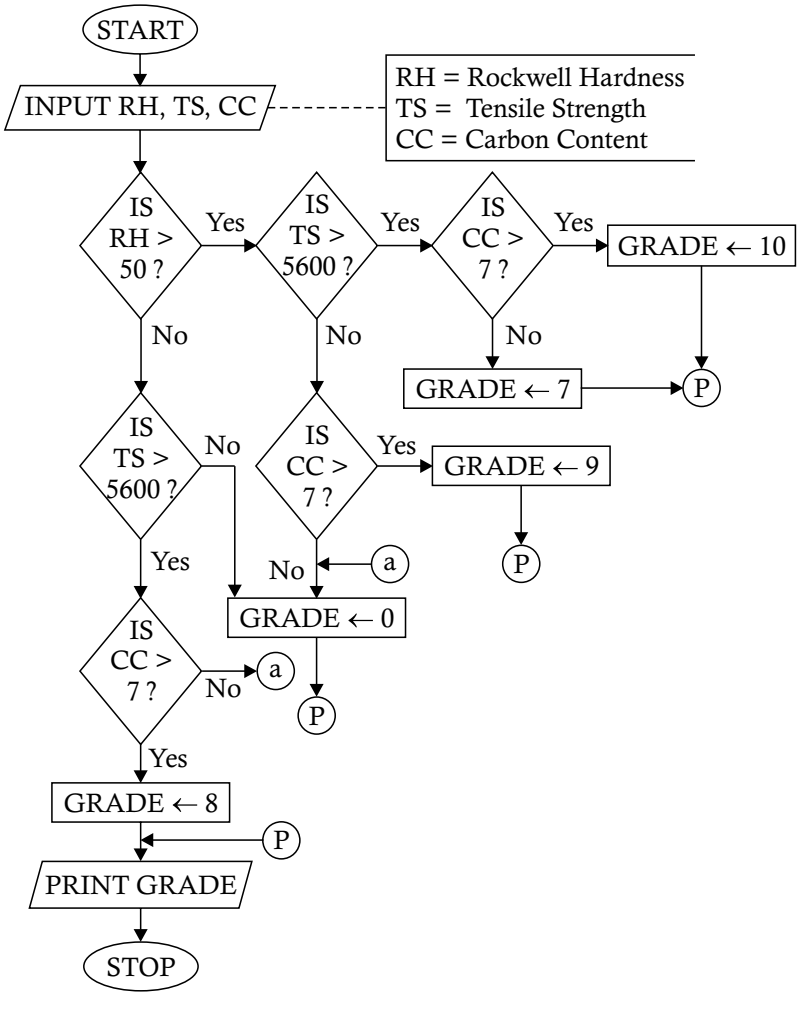

Copyright © 2020. Mercury Learning & Information. All rights reserved.

Chaudhuri, A.B., Flowchart and Algorithm Basics : The Art of Programming, Mercury Learning & Information, 2020. ProQuest Ebook Central, http://ebookcentral.proquest.com/lib/univ-people-ebooks/detail.action?docID=6404903.
Created from univ-people-ebooks on 2026-01-30 11:09:50.
Flowchart and Algorithm Basics_C01-02.indd 32 6/12/2020 2:37:08 PM

Task Analysis. We must determine the grade of the steel on the basis of the values of three characteristics, namely, the Rockwell hardness, carbon content, and tensile strength. The values of these three features are the input.

The algorithm corresponding to Problem 2.9 is given below:

```
Step 1.  INPUT TO RH, TS, CC
Step 2.  IF RH > 50
            THEN IF TS > 5600
                    THEN IF CC > 0.7
                            THEN GRADE ← 10
                        ELSE
                            GRADE ← 7
                        END-IF
                 ELSE
                    IF CC > 0.7
                       THEN GRADE ← 9
                    ELSE
                       GRADE ← 0
                 END-IF
             END-IF
         ELSE
             IF TS > 5600
                THEN IF CC > 0.7
                        THEN GRADE ← 8
                        ELSE
                            GRADE ← 0
                        END-IF
             ELSE
                 GRADE ← 0
             END-IF
Step 3.  PRINT GRADE
Step 4.  STOP
```

Problem 2.10. *Construct a flowchart to show how the greatest of the three given numbers can be obtained.*

Task Analysis. This problem is similar to the problem for finding the greater of two given numbers. The only difference is that two successive comparisons are needed because three numbers cannot be compared at a time.

Copyright © 2020. Mercury Learning & Information. All rights reserved.

Flowchart and Algorithm Basics_C01-02_Page 33
Chaudhuri, A.B., Flowchart and Algorithm Basics : The Art of Programming, Mercury Learning & Information, 2020. ProQuest Ebook Central, http://ebookcentral.proquest.com/lib/univ-people-ebooks/detail.action?docID=6404903.
Created from univ-people-ebooks on 2026-01-30 11:09:50.
6/12/2020 2:37:08 PM

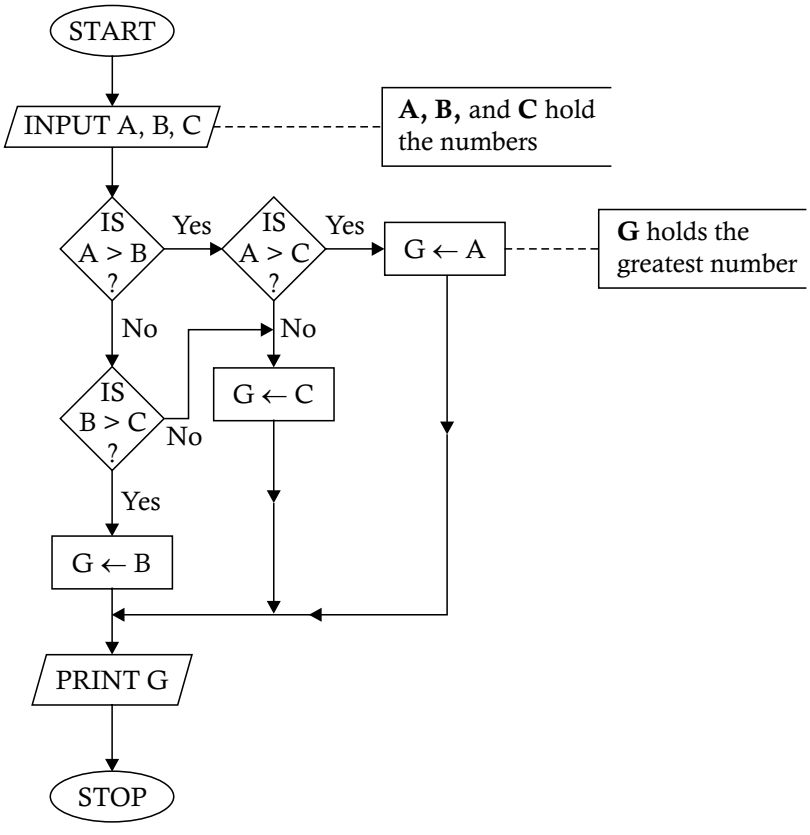

The following algorithm shows the procedure to follow for Problem 2.10:

Step 1. INPUT TO A, B, C
(Accept three numbers for A, B, and C)

Step 2. IF A > B
THEN IF A > C
THEN G ← A
(G holds the desired number)
ELSE
G ← C
END-IF
ELSE
IF B > C
THEN G ← B
ELSE
G ← C
END-IF

Copyright © 2020. Mercury Learning & Information. All rights reserved.

Chaudhuri, A.B., Flowchart and Algorithm Basics : The Art of Programming, Mercury Learning & Information, 2020. ProQuest Ebook Central, http://ebookcentral.proquest.com/lib/univ-people-ebooks/detail.action?docID=6404903.
Created from univ-people-ebooks on 2026-01-30 11:09:50.
Flowchart and Algorithm Basics_C01-02_Page 34 6/12/2020 2:37:08 PM

END-IF
Step 3. PRINT "THE GREATEST OF THE GIVEN NUMBERS IS", G
Step 4. STOP

Problem 2.11. *A bookseller offers two rates of commissions. If the price of a book is below $100, the rate of commission is 12% of the price, otherwise, it is 18% of the price. Develop a procedure to determine the discount and the net price of a book.*

Task Analysis. The outputs required are the discount and net price of a book. The only input required for this purpose is price of the book. The rates of the discount are constants (fixed). These rates can be used to develop formulas to calculate the discounts in the two different cases. The calculated discount can then be subtracted from the price of the book to obtain the net price.

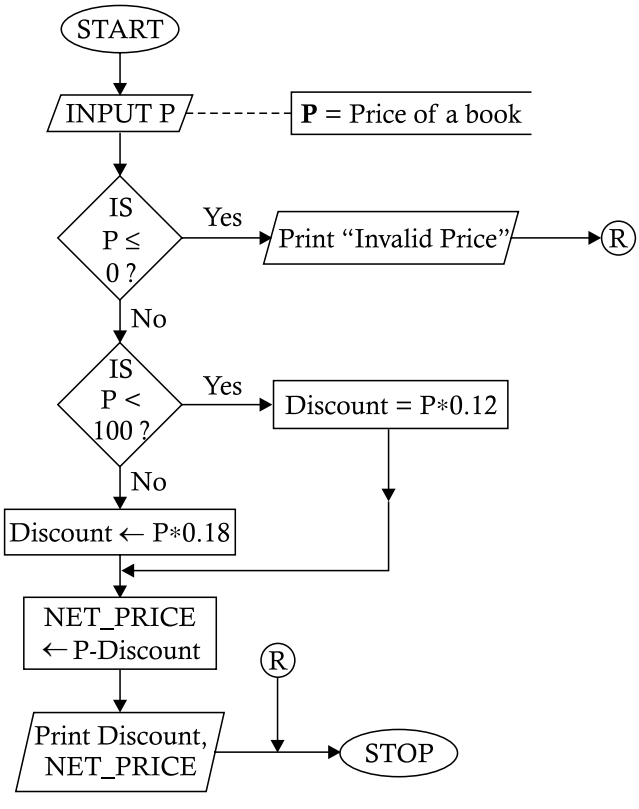

Note that the procedure suggests the printing of a message when some absurd input is provided.

Copyright © 2020. Mercury Learning & Information. All rights reserved.

Flowchart and Algorithm Basics_09-02 Index 35
Chaudhuri, A.B., Flowchart and Algorithm Basics : The Art of Programming, Mercury Learning & Information, 2020. ProQuest Ebook Central, http://ebookcentral.proquest.com/lib/univ-people-ebooks/detail.action?docID=6404903.
Created from univ-people-ebooks on 2026-01-30 11:09:50.
6/12/2020 2:37:08 PM

The algorithm corresponding to Problem 2.11 is given below:

```
Step 1.  INPUT TO P
         (Accept the price of a book in P)
Step 2.  IF P <= 0
            THEN PRINT "INVALID PRICE"
         ELSE
            IF P < 100
         COMPUTE D ← P*0.12 (Store the calculated discount in D)
            ELSE
         COMPUTE D ← P*0.18
            END-IF
         END-IF
Step 3.  COMPUTE NET_PRICE ← P – D
Step 4.  PRINT D, NET_PRICE
Step 5.  STOP
```

EXERCISES

Construct flowcharts for the following problems:

(i) Print a currency conversion table for pounds, francs, marks, and lire to dollars.

(ii) Find whether a given year is a leap year.

Hint. A year is said to be a leap year if it is either divisible by 4 but not by 100 or divisible by 400.

(iii) Validate a given year.

Hints. The year in the date must be greater than zero, the months must lie between 1 and 12, and the days must lie between 1 and 31, depending on the month numbers.

(iv) Show the time required by an advertising agency for its advertising program to run in Boston and on National Public Radio and to display the amount to be paid by the agency for its advertisement.

Copyright © 2020. Mercury Learning & Information. All rights reserved.

Chaudhuri, A.B., Flowchart and Algorithm Basics : The Art of Programming, Mercury Learning & Information, 2020. ProQuest Ebook Central, http://ebookcentral.proquest.com/lib/univ-people-ebooks/detail.action?docID=6404903.
Created from univ-people-ebooks on 2026-01-30 11:09:50.

(v) Calculate the commission of a salesman when sales and the region of the sales are given as input. The commission is calculated with the rules as follows:

(a) No commission, if sales < \$9,000 in Region A

(b) 5.5% of sales < \$7,000 in Region B and when sales < \$13,000 in Region A

(c) 7.5% of sales when sales > = \$14,000 in Region A and when sales > = \$13,000 in Region B.

(vi) Accept three integers representing the angles of a triangle in degrees to determine whether they form a valid set of angles of a triangle. If it is not a valid set, then generate a message and terminate the process. If it is a valid set, then the process determines whether it is equiangular (all three angles are the same). It also determines if the triangle is right angled (has one angle with 90 degrees), obtuse angled (one angle above 90), or acute angled (all three angles are below 90 degrees). Finally, it shows conclusion about the triangle.

(vii) Accept the lengths of the three sides of a triangle to validate whether they can be the sides of a triangle and then classify the triangle as equilateral (all three sides are equal), scalene (all three sides are different), or isosceles (exactly two sides are equal), and then to see whether it is a right angled triangle (the sum of the squares of two sides is equal to the square of the third side.)

Hint. Three numbers are valid as the sides of a triangle if each one is positive and the sum of every two numbers is greater than the third.

(viii) Allow the user to perform a simple task on a calculator on the basis of a given choice as follows:

+, −, ×, /, or % representing the arithmetic operators

A Average of two numbers

X Maximum of two numbers

M Minimum of two numbers

S Square of two numbers

Q Quit

Copyright © 2020. Mercury Learning & Information. All rights reserved.

Chaudhuri, A.B. Flowchart and Algorithm Basics : The Art of Programming, Mercury Learning & Information, 2020. ProQuest Ebook Central, http://ebookcentral.proquest.com/lib/univ-people-ebooks/detail.action?docID=6404903.
Created from univ-people-ebooks on 2026-01-30 11:09:50.
Flowchart and Algorithm Basics_C01-02_Page 37 6/12/2020 2:37:08 PM

(ix) An electricity board charges the following rates to domestic users to discourage large consumption of energy:

for the first 100 units—$.85 per unit

for the next 200 units—$1.45 per unit

Beyond 300 units—$1.85 per unit

All users are charged a minimum of $ 500.00. If the total cost is more than $ 2,500.00, then an additional surcharge of 3% of the total cost is added to the total cost to determine the final bill.

(x) To determine and print the minimum number of currency notes of the denominations: $1, $5, $10, $20, $50, $100, $500 and $1000 required to pay any given amount.

Copyright © 2020. Mercury Learning & Information. All rights reserved.

Chaudhuri, A B, Flowchart and Algorithm Basics : The Art of Programming, Mercury Learning & Information, 2020. ProQuest Ebook Central, http://ebookcentral.proquest.com/lib/univ-people-ebooks/detail.action?docID=6404903.
Created from univ-people-ebooks on 2026-01-30 11:09:50.
Flowchart and Algorithm Basics_C01-02_Page 38 6/12/2020 2:37:08 PM