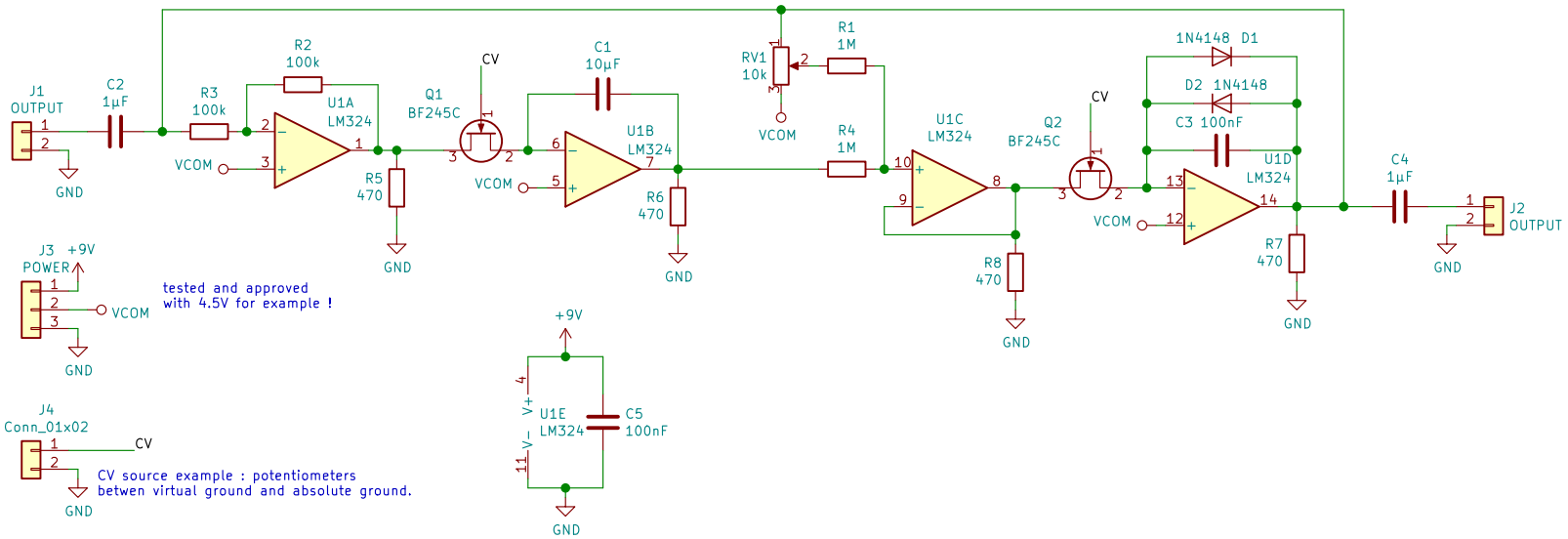

OLIVER MICHALOWSKI

Sheet: /
File: olivcf.sch

Title: OLIVCF

Size: A4	Date: 2021-09-03	**Rev:**
KiCad E.D.A. kicad (5.1.2-1)-1		Id: 1/1