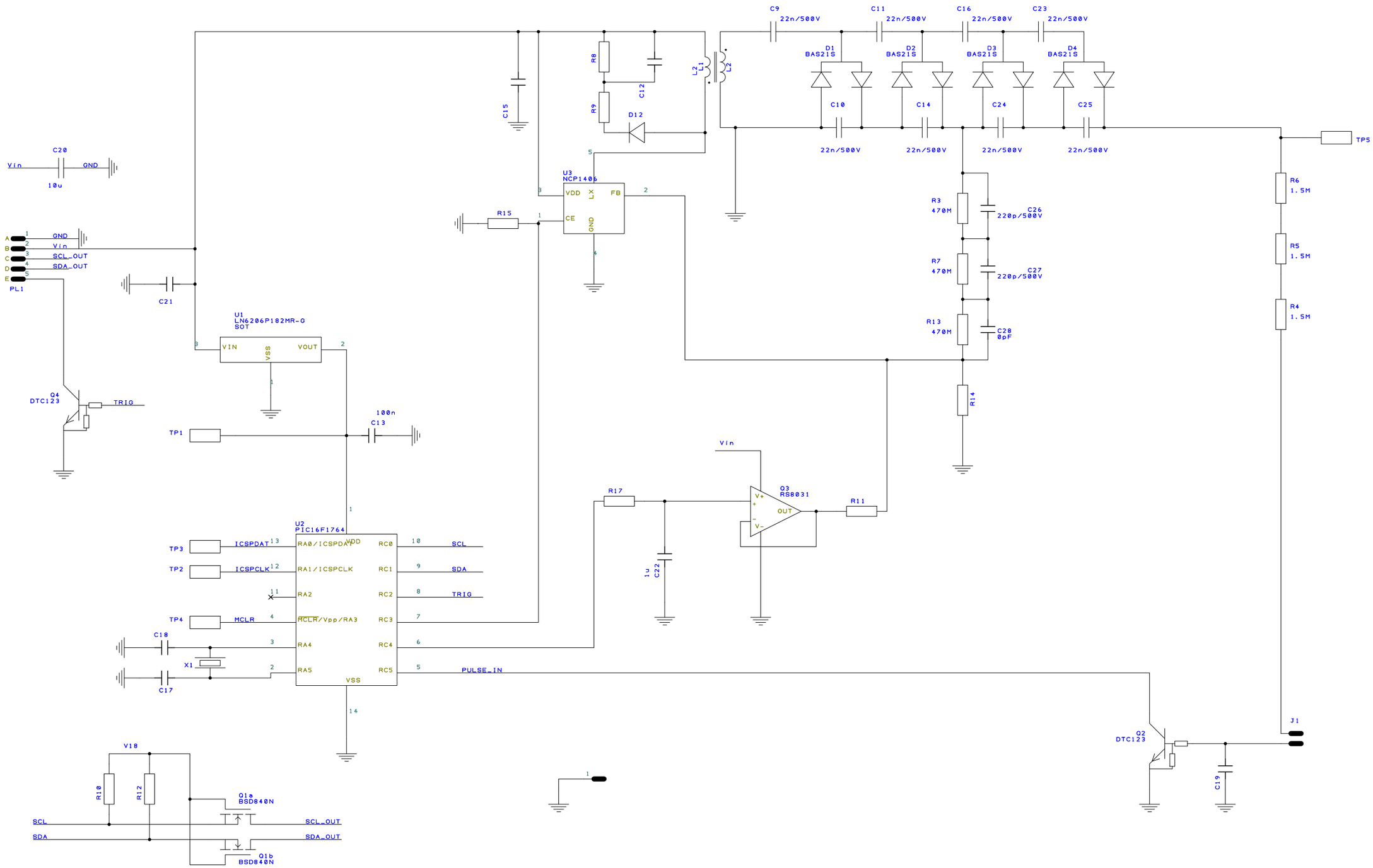

PROJECT:
DRAWING TITLE:
DRAWN BY:
REVISION:
SHEET: OF
STATUS:
DATE:
DESIGNSPARK PCB available for FREE at www.DesignSpark.com/PCB