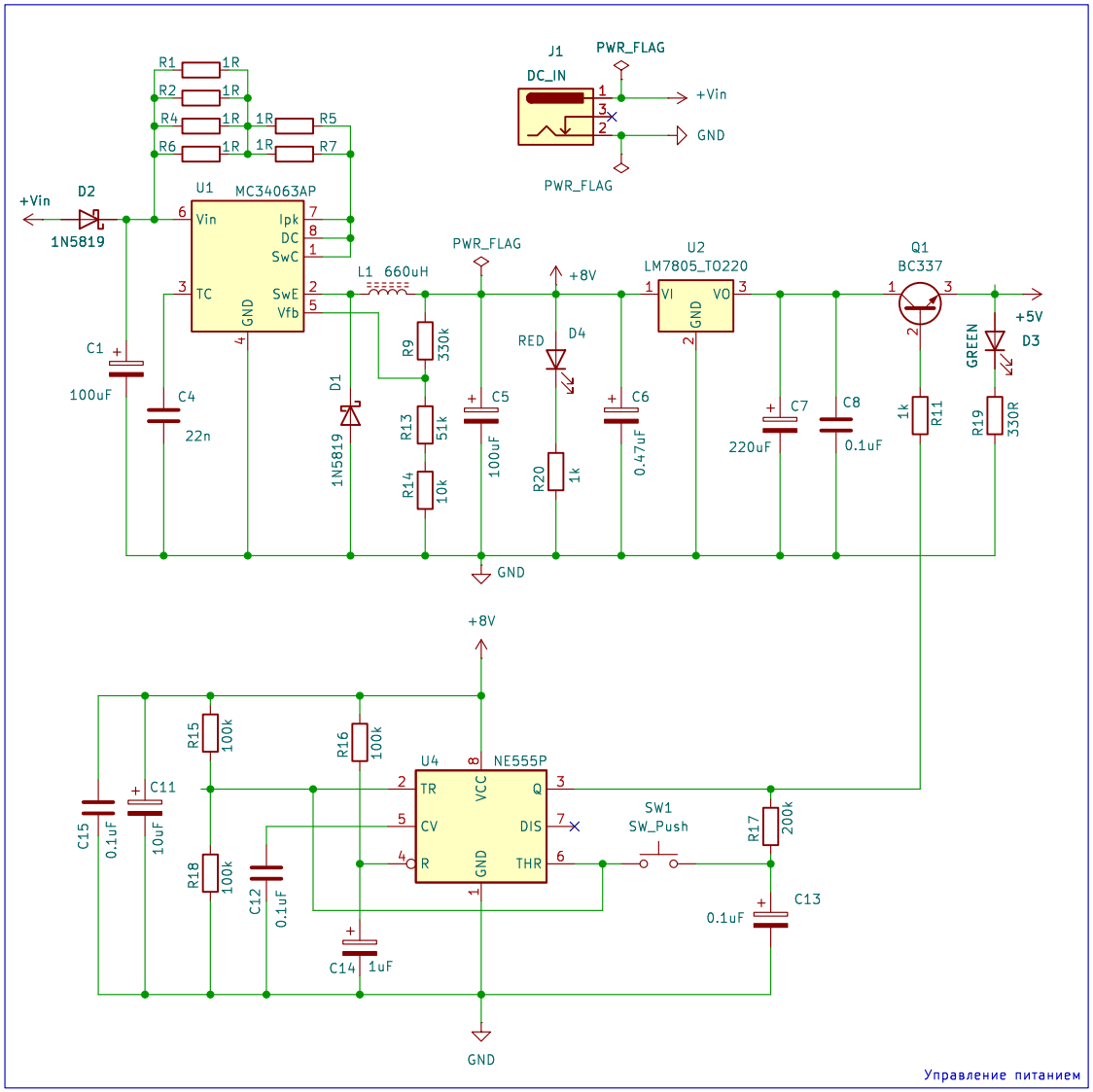

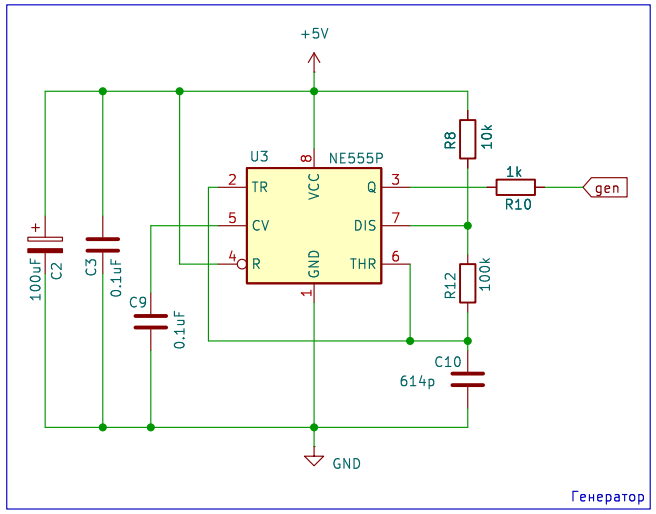

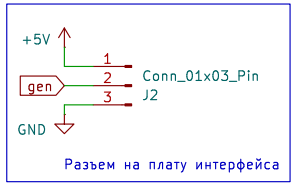

Sheet: /
File: Zelenin-CW-power-prj.kicad_sch

Title: Power Board

Size: A4	Date:	Rev:
KiCad E.D.A. 8.0.6		Id: 1/1