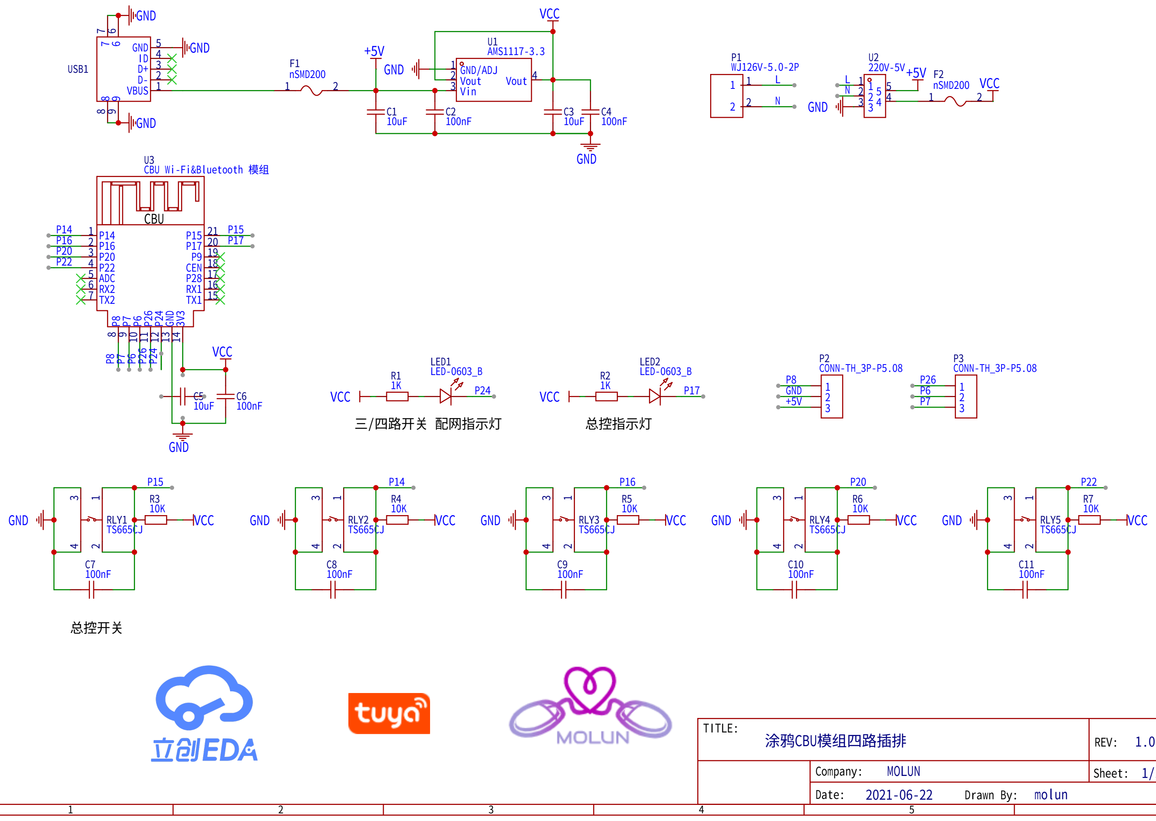

TITLE: 涂鸦CBU模组四路插排		REV: 1.0
	Company: MOLUN	Sheet: 1/1
	Date: 2021-06-22 Drawn By: molun	

立创EDA