Project Report

Student Name: Rose Alice Ekka **UID: 24MCA20228**
Branch: MCA **Section/Group: 2A**
Semester: 4th **Date of Performance: 16/03/26**
Subject Name: IOT LAB **Subject Code: 24CAP-751**

Aim: To design and implement an IoT-based fire detection system that can detect flame and gas leakage in real-time and send instant alerts to users via a mobile application.

Objectives:

- To detect fire using a flame sensor.
- To monitor gas levels using a gas sensor (MQ series).
- To provide real-time monitoring using the Blynk IoT platform.
- To trigger alerts (LED + buzzer + mobile notification) during emergency.

Components Required:

Sno	Name of Component	Qty.
1.	NodeMCU (ESP8266)	1
2.	MQ Gas Sensor	1
3.	IR Flame Sensor	1
4.	LED	1
5.	Resistor	1
6.	Breadboard	1
7.	Buzzer	1
8.	USB Cable	1

Details of Components:

1. **NodeMCU:**
   The NodeMCU board is a low-cost, open-source IoT platform widely recognized for its user-friendly approach to building Internet-connected projects. Based on the ESP8266 WiFi chip, it combines a microcontroller with WiFi capabilities, enabling developers to create connected devices with ease.

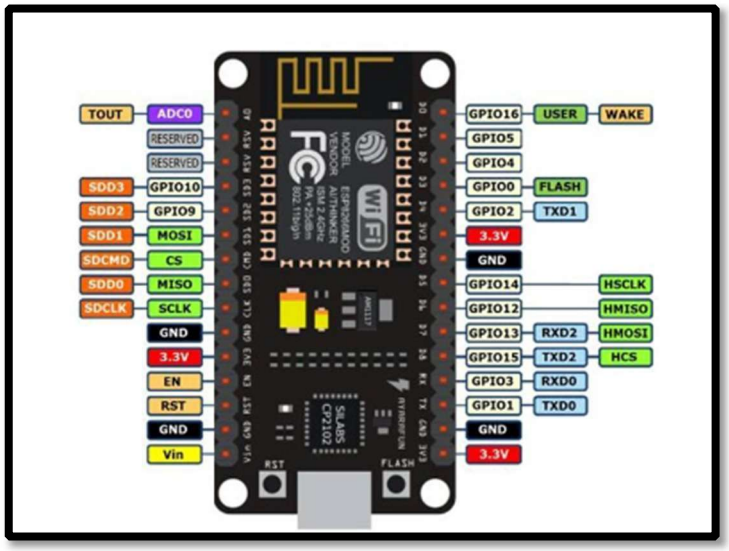

Figure 1 : NodeMCU Board

2. MQ Gas Sensor:

Gas Sensor(MQ2) module is useful for gas leakage detection (home and industry). It is suitable for detecting H2, LPG, CH4, CO, Alcohol, Smoke, or Propane. Due to its high sensitivity and fast response time, a measurement can be taken as soon as possible. The sensitivity of the sensor can be adjusted by the potentiometer

Features

- Wide detecting scope
- Stable and long lifetime
- Fast response and High sensitivity

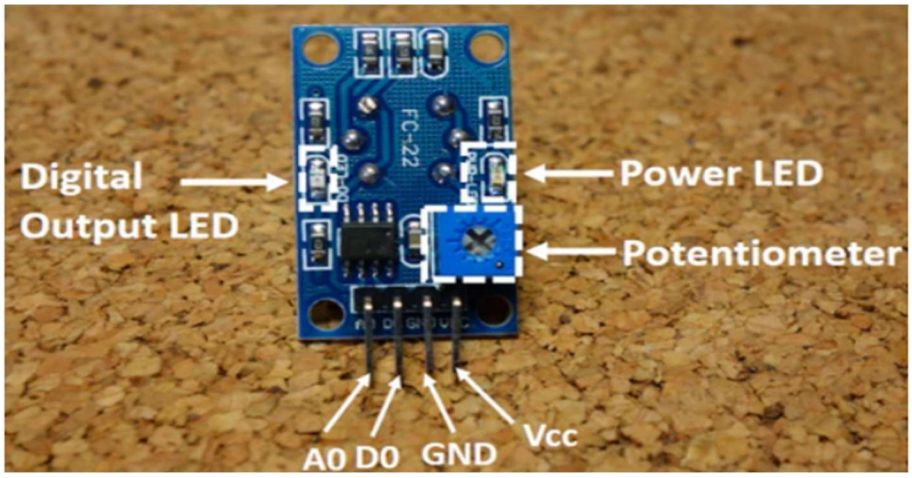

Figure 2 : MQ2 Gas Sensor

3. IR Flame Sensor:

Infrared flame sensors detect flames by sensing the infrared radiation they emit. The sensor converts this radiation into an electrical signal to indicate fire. They are effective in industrial environments because they can distinguish flame radiation from other infrared sources.

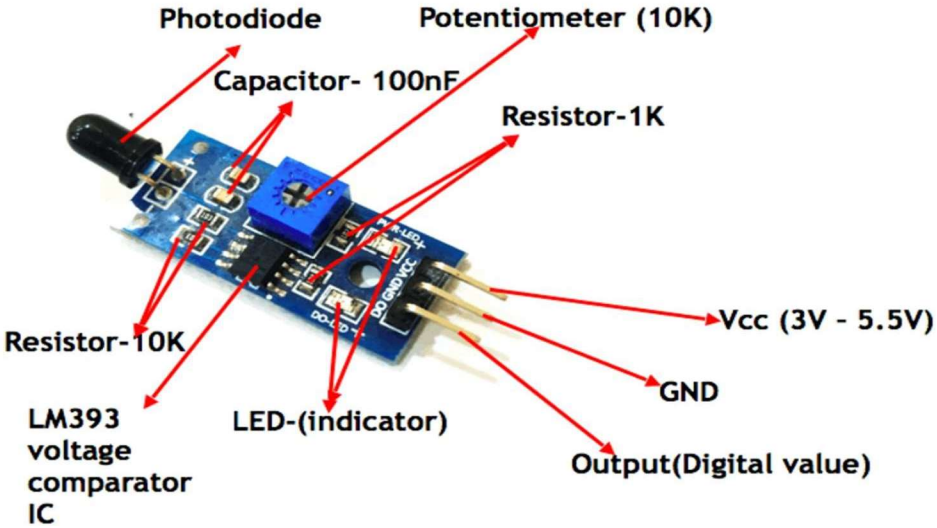

Figure 3 : Flame sensor

4. LED:

An LED is a PN junction diode that emits light when forward biased. Electrons and holes recombine at the junction, releasing energy as photons (light) through a process called electroluminescence. It uses semiconductor material and can produce visible or infrared light.

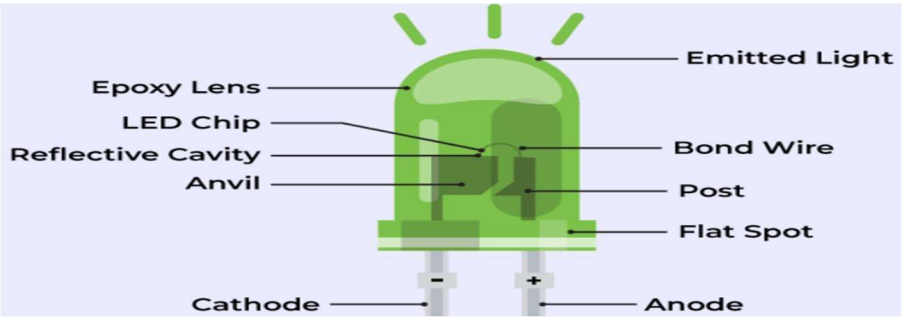

Figure 4 : LED

5. Resistor

A resistor is a passive electronic component that opposes the flow of electric current in a circuit and is measured in ohms (Ω). It is used to control, limit, or divide current. A typical resistor has four color bands: the first band represents the first digit, the second band represents the second digit, the third band indicates the multiplier, and the fourth band shows the tolerance percentage.

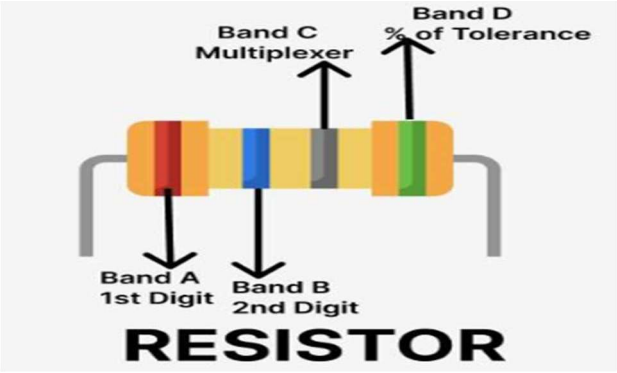

Figure 5 : Resistor

6. Breadboard

A breadboard, particularly the type discussed in this article, is a physical platform that simplifies constructing electronic circuits. It lets you create a circuit similar to a printed circuit board (PCB) without permanent soldering. This approach is perfect for experimenting with circuit designs before making them permanent

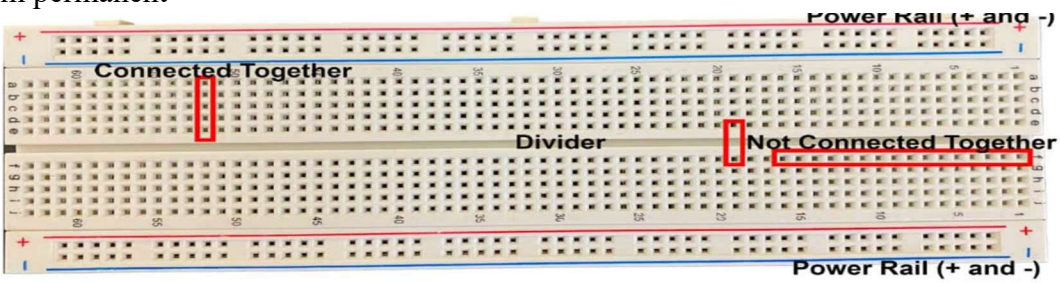

Figure 6 : Breadboard

7. Buzzer

An audio signaling device like a beeper or buzzer may be electromechanical or piezoelectric or mechanical type. The main function of this is to convert the signal from audio to sound. Generally, it is powered through DC voltage and used in timers, alarm devices, printers, alarms, computers, etc. Based on the various designs, it can generate different sounds like alarm, music, bell & siren.

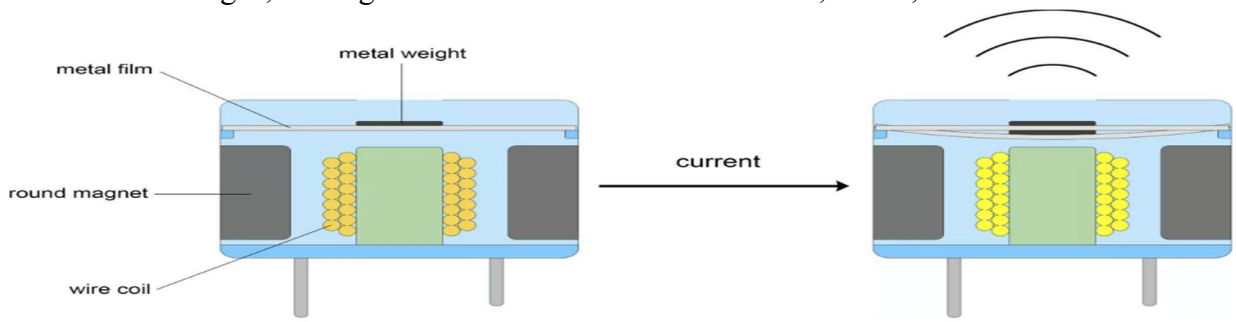

Figure 7: Buzzer

Block Diagram of Designed Model:

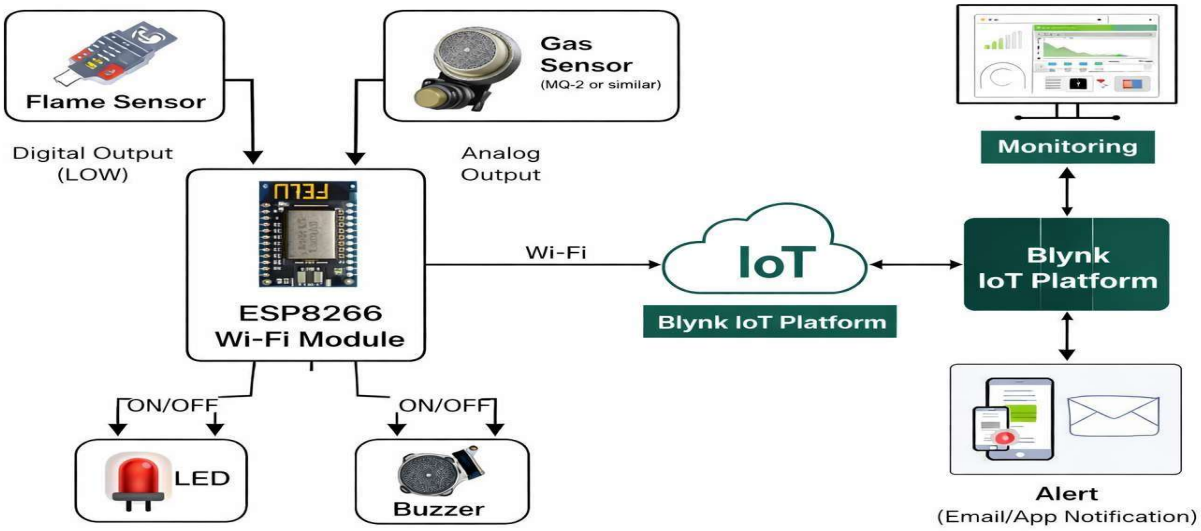

Figure 8: Block Diagram

Working of Designed Model:

- As shown in the block diagram, the system is built around the ESP8266 Wi-Fi module, which acts as the main controller. The flame sensor and gas sensor are connected to the ESP8266, where the flame sensor provides digital output and the gas sensor provides analog values for continuous monitoring of environmental conditions.

- The ESP8266 connects to the Wi-Fi network and communicates with the Blynk IoT cloud platform, enabling real-time data transmission. The gas sensor readings are continuously sent to the Blynk dashboard, where they are displayed in the form of gauges and graphs for monitoring purposes.

- When the flame sensor detects fire (LOW signal) or when the gas sensor value exceeds a predefined threshold (e.g., 400), the ESP8266 identifies it as a fire hazard condition and immediately triggers the alert mechanism.

- In response to the detected hazard, the system activates output devices such as the LED and buzzer, providing visual and audible alerts locally to warn nearby people about the danger.

- Simultaneously, the ESP8266 sends a notification to the Blynk cloud, which then triggers an alert message (email/app notification) to the user, ensuring remote awareness of the situation.

- If no fire or gas leakage is detected, the system remains in monitoring mode, continuously checking sensor values and updating the dashboard in real-time without activating any alerts.

Pictures of Prototype:

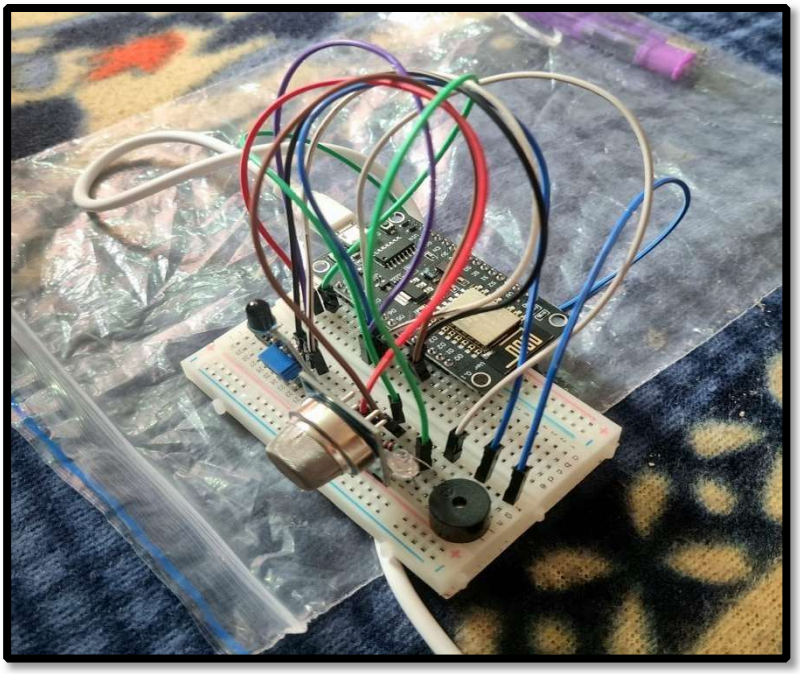

Figure 9 : Designed Model

Output of Deigned Model/Prototype

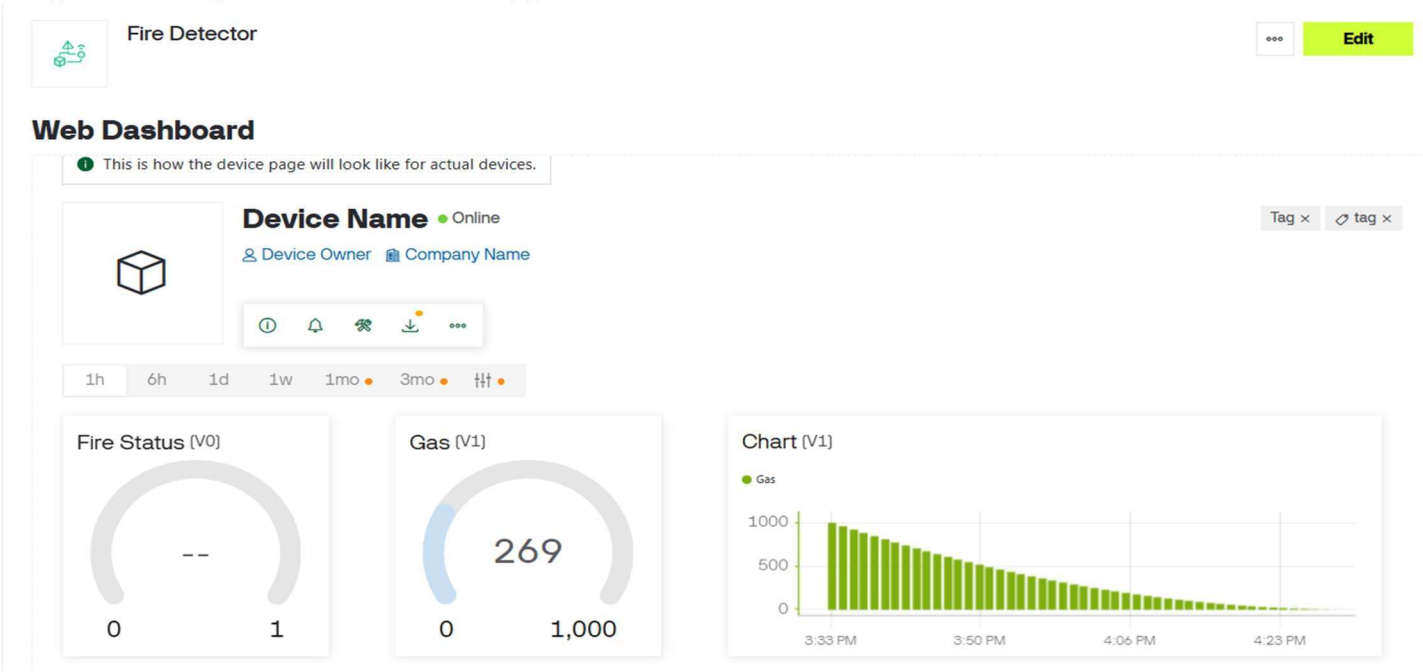

Figure 10: Output on blynk cloud

Alert on user email

Learning outcomes (What I have learnt):

- Gained practical knowledge of Internet of Things (IoT) concepts and real-time monitoring systems.
- Learned how to interface sensors such as flame sensor and gas sensor (MQ-2) with the ESP8266 microcontroller.
- Understood the working of Wi-Fi-enabled communication and data transfer between hardware and cloud platforms.
- Acquired hands-on experience with the Blynk IoT platform for creating dashboards, monitoring data, and sending alerts.
- Learned how to design and implement a real-time alert system using buzzer, LED, and mobile notifications.
- Improved problem-solving and troubleshooting skills while integrating hardware and software components.
- Gained knowledge about safety systems and smart automation, which can be applied in real-world scenarios like homes and industries.