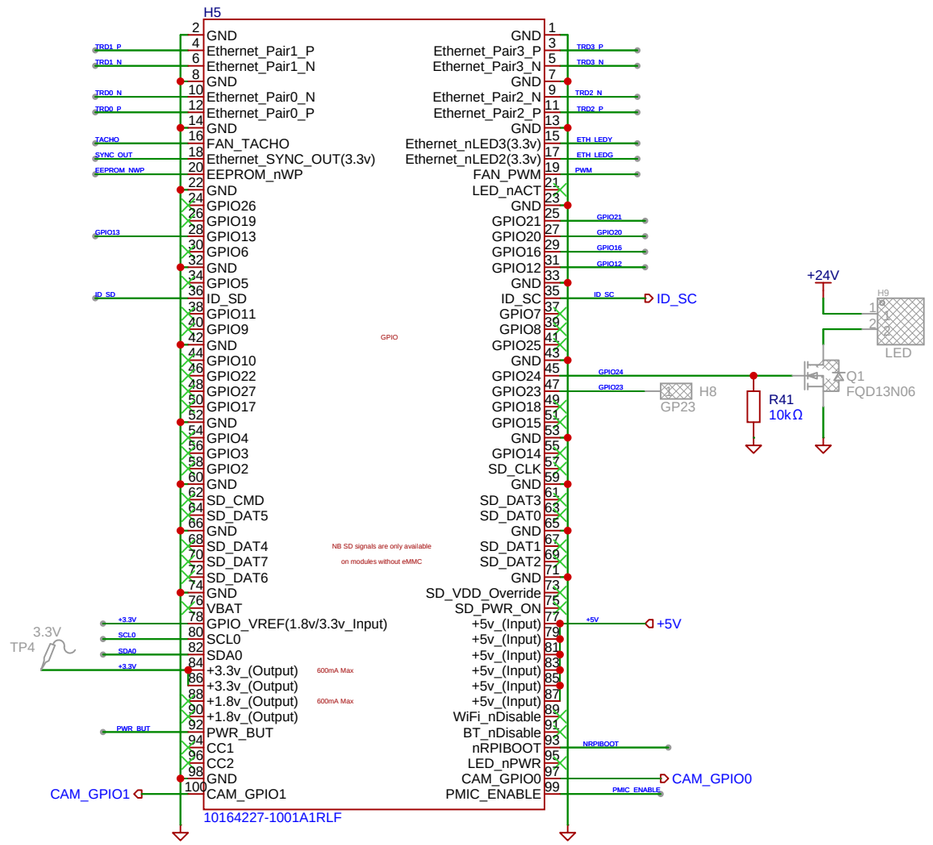

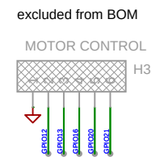

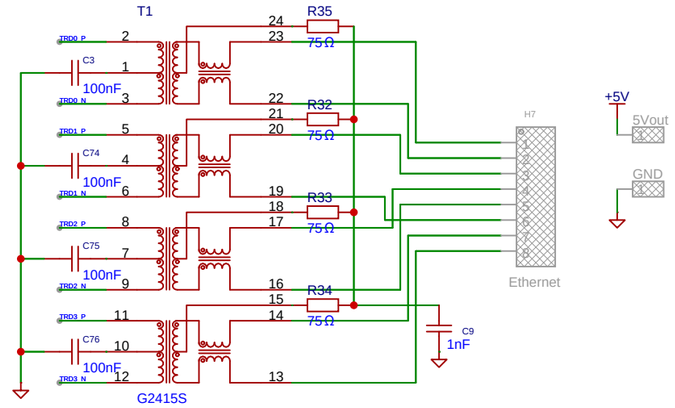

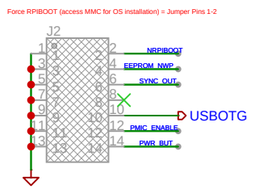

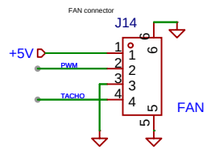

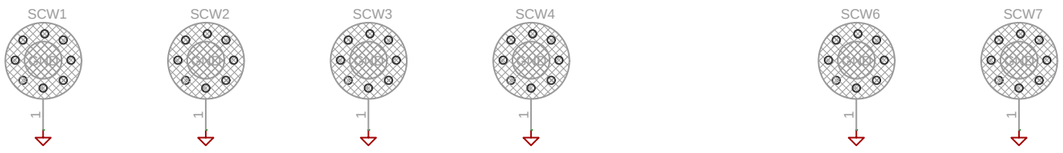

Schematic	Custom CM5 IO	Create at	2025-02-06
		Update at	2025-06-12
Board	Custom CM5 IO	Page	CM5_GPIO
Drawn		Smart IoT System Thesis	
Reviewed			
		Version	Size	Page 1 Total 2
EasyEDA		V1.0	A4	Metropolia UAS

DSI/CSI Connectors

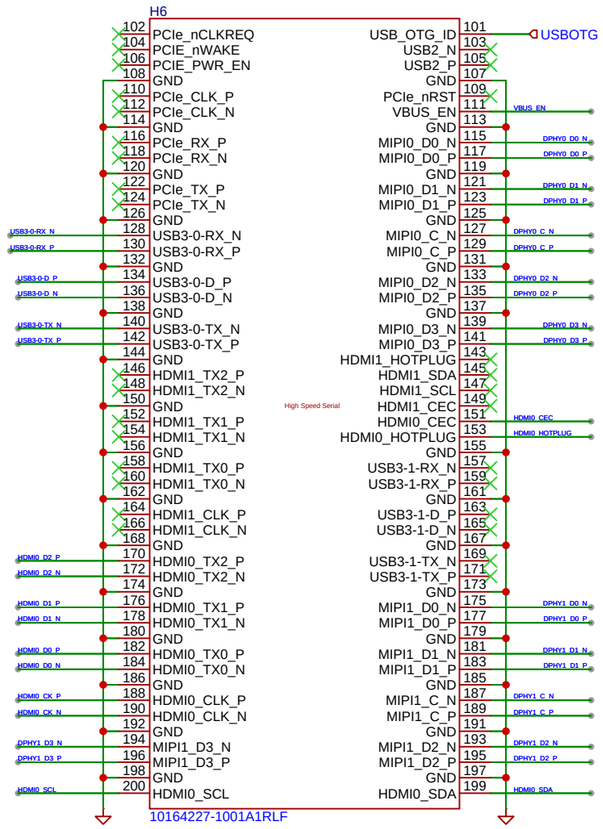

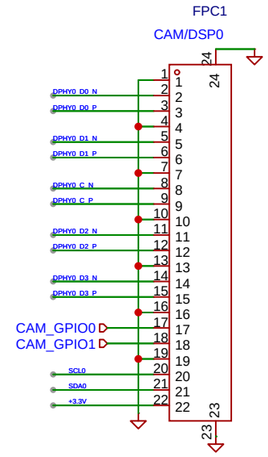

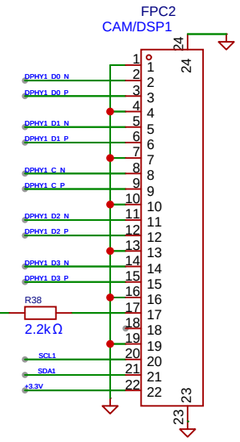

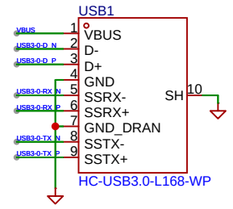

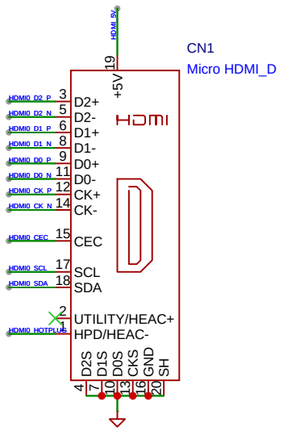

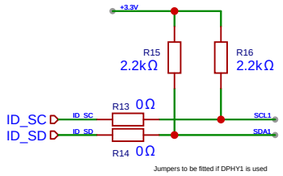

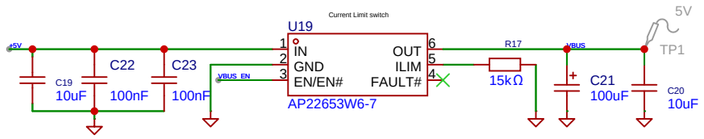

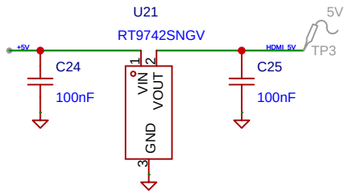

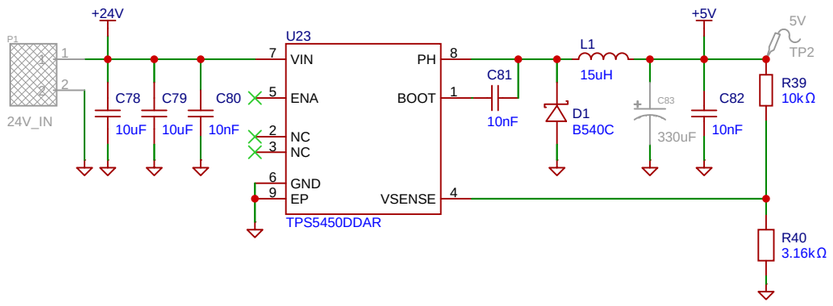

Schematic	Custom CM5 IO	Create at	2025-02-06
		Update at	2025-06-12
Board	Custom CM5 IO	Page	CM5_CSI_USB
Drawn	Smart IoT System Thesis		
Reviewed			
		Version	Size	Page 2 Total 2
EasyEDA		V1.0	A4	Metropolia UAS