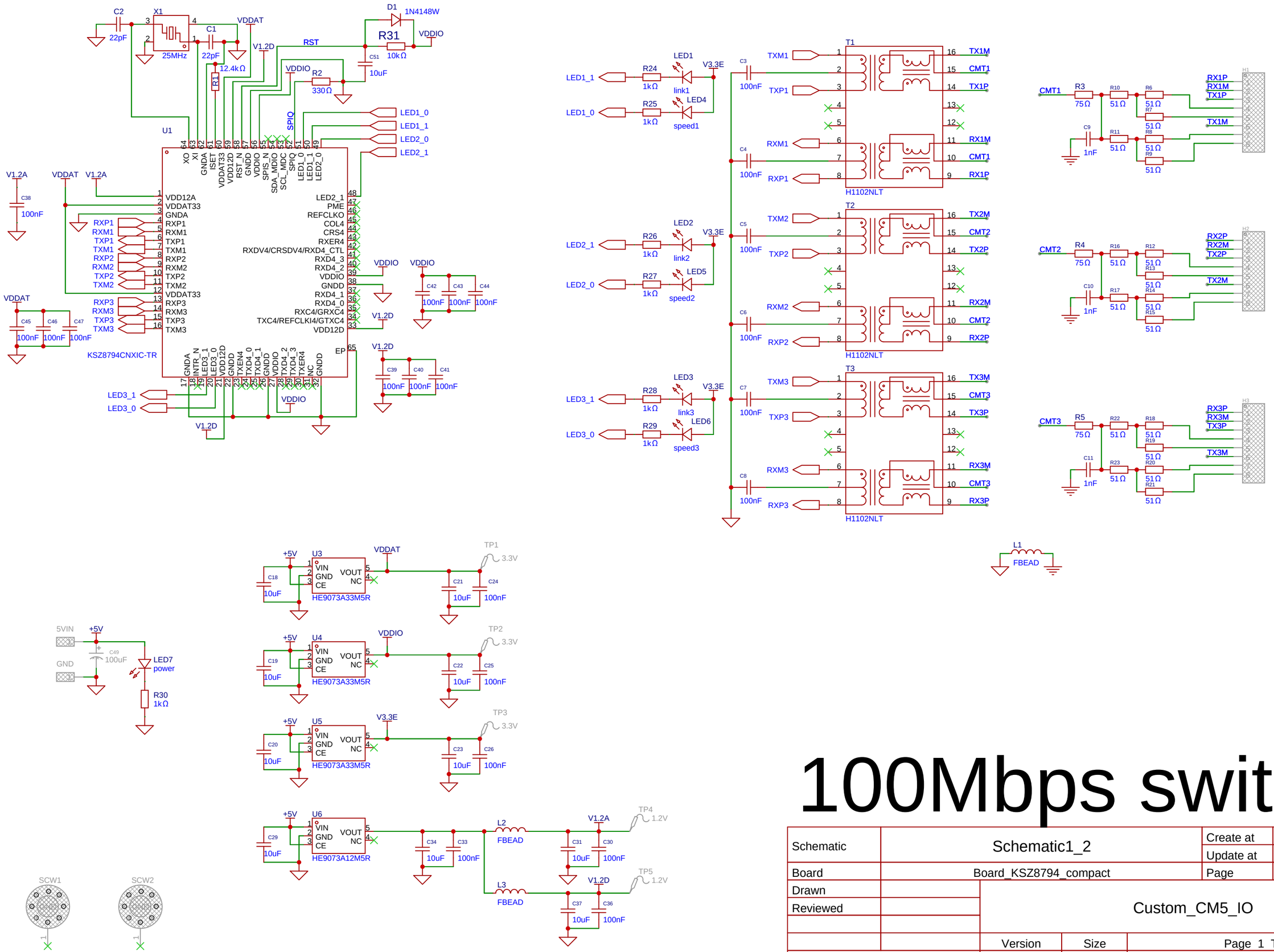

100Mbps switch

Schematic	Schematic1_2	Create at	2025-04-16
		Update at	2025-04-16
Board	Board_KSZ8794_compact	Page	P1
Drawn		Custom_CM5_IO	
Reviewed			
		Version	Size	Page 1 Total 1
EasyEDA		V1.0	A4	EasyEDA.com