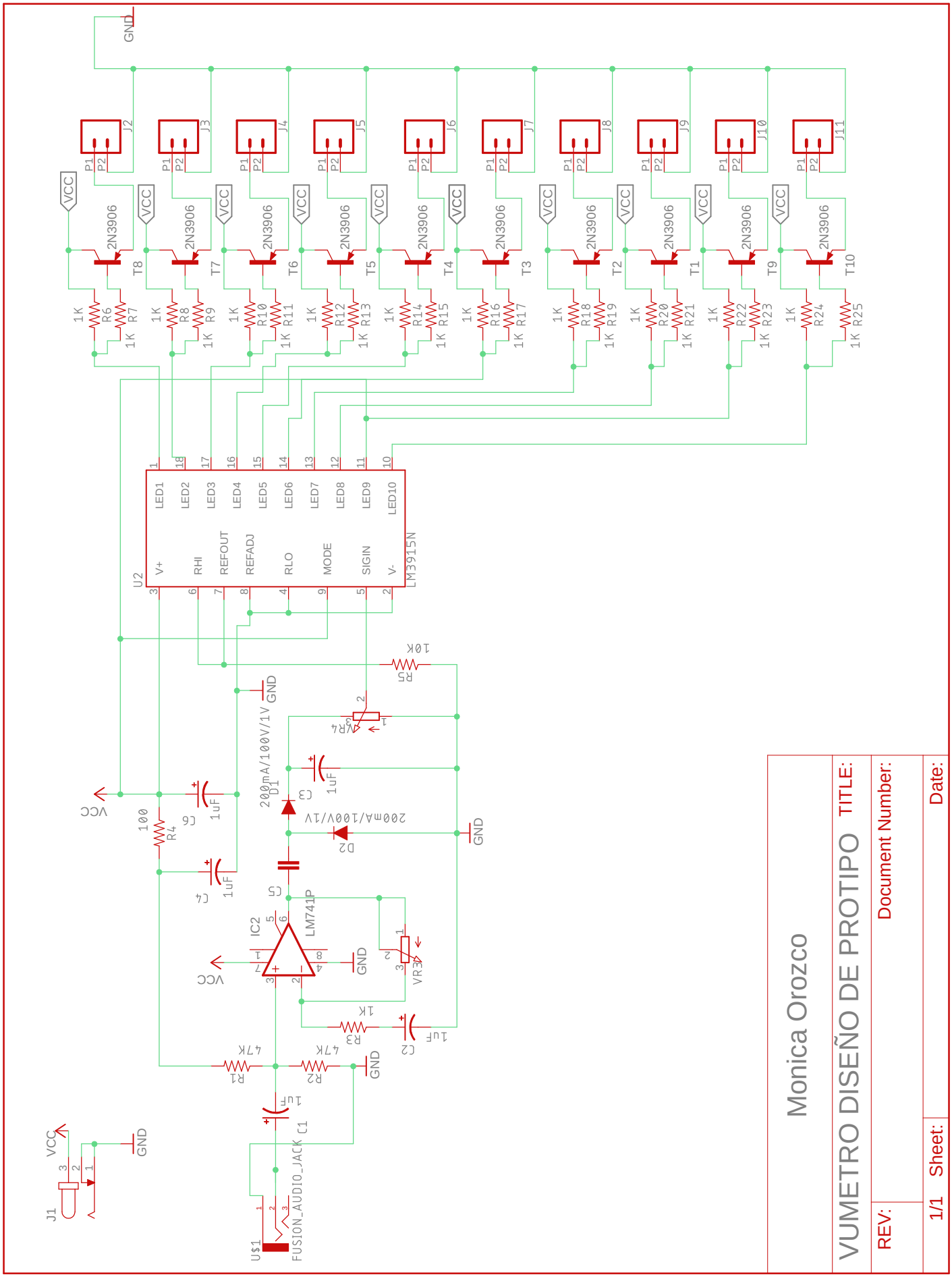
Monica Orozco
VUMETRO DISEÑO DE PROTIPO
TITLE:
Document Number:
REV:
Sheet:
1/1
Date:
U2
LM3915N
LED1
LED2
LED3
LED4
LED5
LED6
LED7
LED8
LED9
LED10
V+
RHI
REFOUT
REFADJ
RLO
MODE
SIGIN
V-
IC2
LM741P
U$1
FUSION_AUDIO_JACK
J1
VCC
GND
2N3906
T1
T2
T3
T4
T5
T6
T7
T8
T9
T10
J2
J3
J4
J5
J6
J7
J8
J9
J10
J11
R1
R2
R3
R4
R5
R6
R7
R8
R9
R10
R11
R12
R13
R14
R15
R16
R17
R18
R19
R20
R21
R22
R23
R24
R25
C1
C2
C3
C4
C5
C6
D1
D2
VR3
VR4
200mA/100V/1V
1K
10K
100
47K
1uF