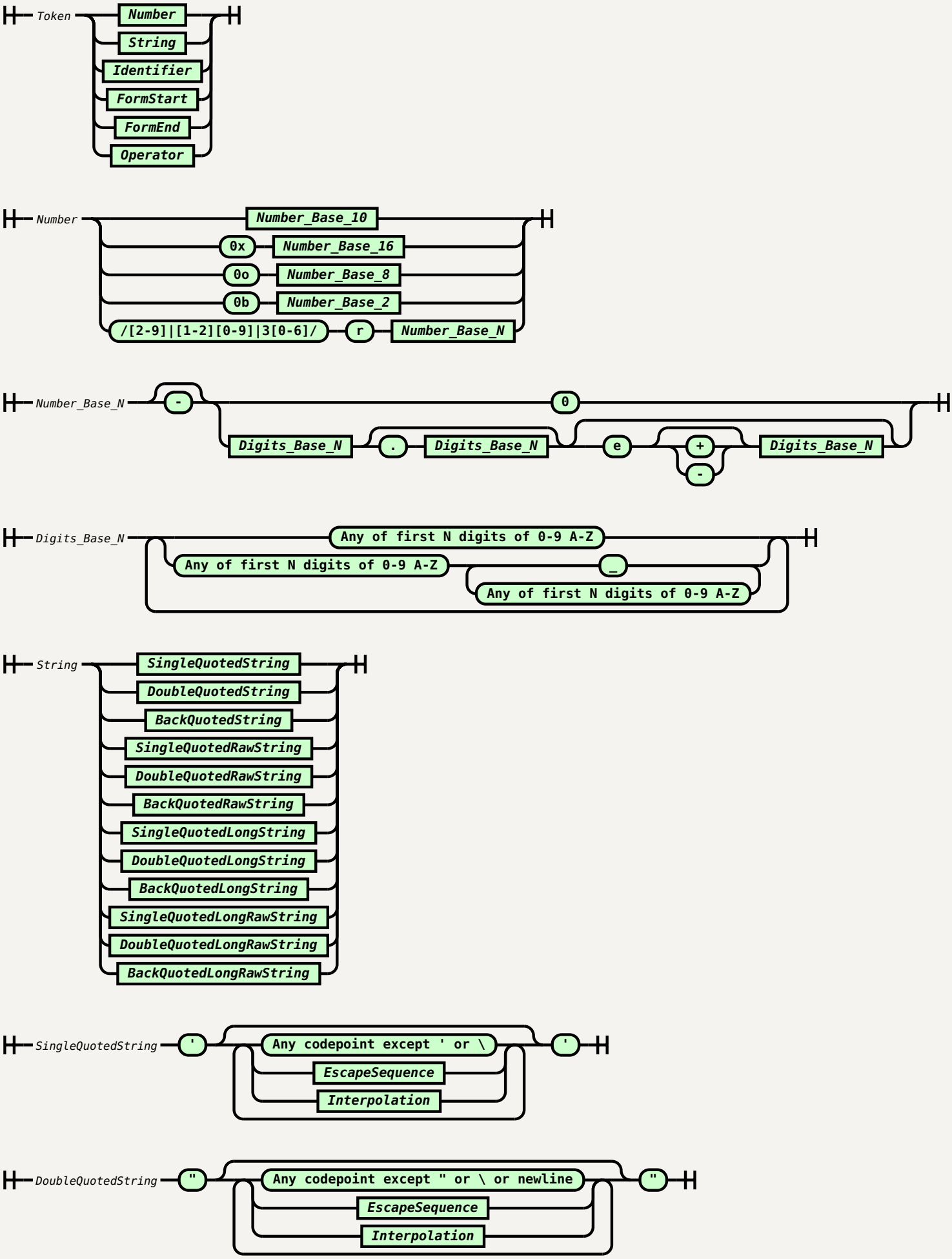
Token
Number
String
Identifier
FormStart
FormEnd
Operator
Number
Number_Base_10
0x
Number_Base_16
0o
Number_Base_8
0b
Number_Base_2
/[2-9]|[1-2][0-9]|3[0-6]/
r
Number_Base_N
Number_Base_N
-
0
Digits_Base_N
.
Digits_Base_N
e
+
-
Digits_Base_N
Digits_Base_N
Any of first N digits of 0-9 A-Z
Any of first N digits of 0-9 A-Z
_
Any of first N digits of 0-9 A-Z
String
SingleQuotedString
DoubleQuotedString
BackQuotedString
SingleQuotedRawString
DoubleQuotedRawString
BackQuotedRawString
SingleQuotedLongString
DoubleQuotedLongString
BackQuotedLongString
SingleQuotedLongRawString
DoubleQuotedLongRawString
BackQuotedLongRawString
SingleQuotedString
'
Any codepoint except ' or \
EscapeSequence
Interpolation
'
DoubleQuotedString
"
Any codepoint except " or \ or newline
EscapeSequence
Interpolation
"

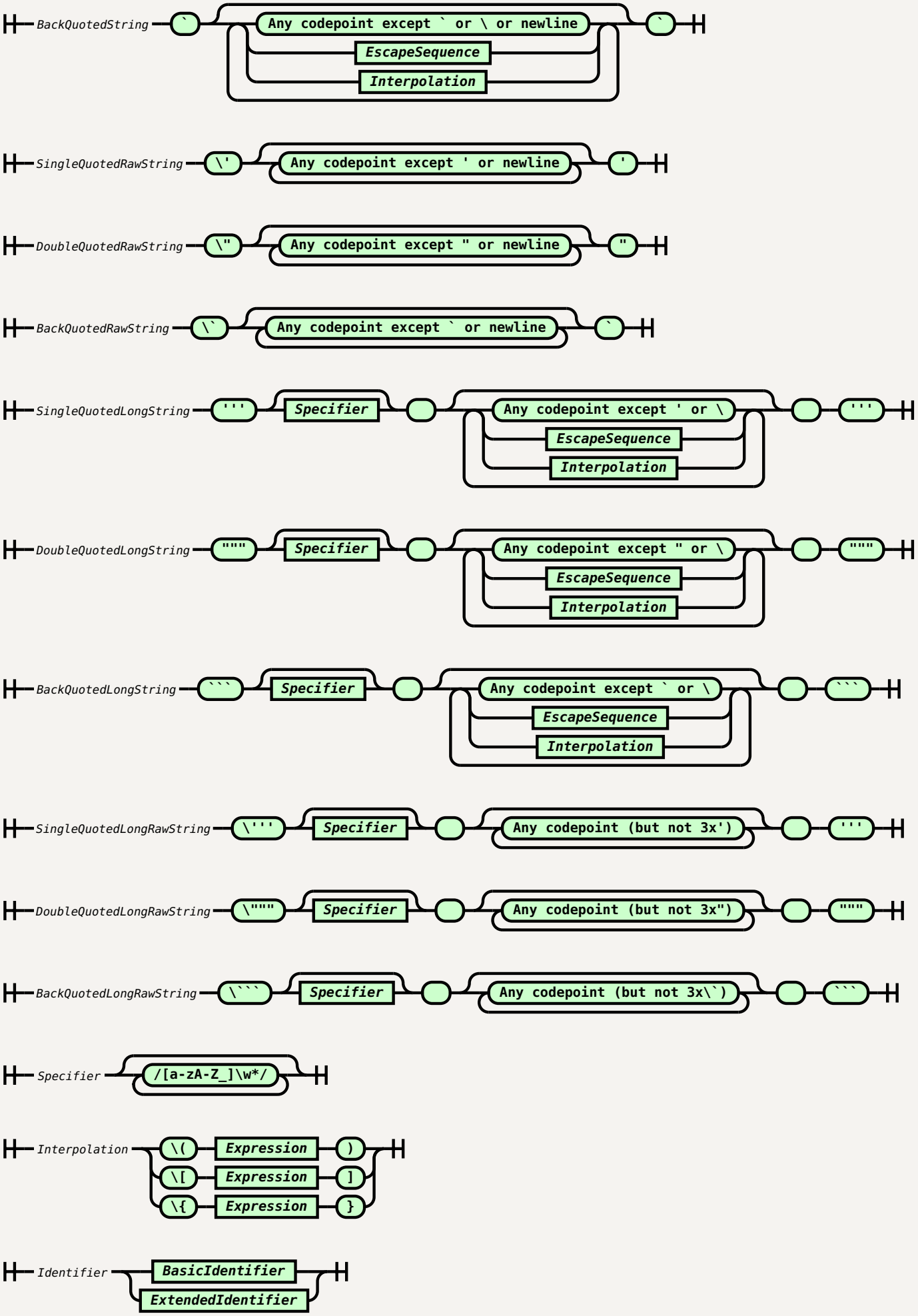
BackQuotedString
`
Any codepoint except ` or \ or newline
EscapeSequence
Interpolation
`
SingleQuotedRawString
\'
Any codepoint except ' or newline
'
DoubleQuotedRawString
\"
Any codepoint except " or newline
"
BackQuotedRawString
\`
Any codepoint except ` or newline
`
SingleQuotedLongString
'''
Specifier
Any codepoint except ' or \
EscapeSequence
Interpolation
'''
DoubleQuotedLongString
"""
Specifier
Any codepoint except " or \
EscapeSequence
Interpolation
"""
BackQuotedLongString
```
Specifier
Any codepoint except ` or \
EscapeSequence
Interpolation
```
SingleQuotedLongRawString
\'''
Specifier
Any codepoint (but not 3x')
'''
DoubleQuotedLongRawString
\"""
Specifier
Any codepoint (but not 3x")
"""
BackQuotedLongRawString
\```
Specifier
Any codepoint (but not 3x\`)
```
Specifier
/[a-zA-Z_]\w*/
Interpolation
\(
Expression
)
\[
Expression
]
\{
Expression
}
Identifier
BasicIdentifier
ExtendedIdentifier
```

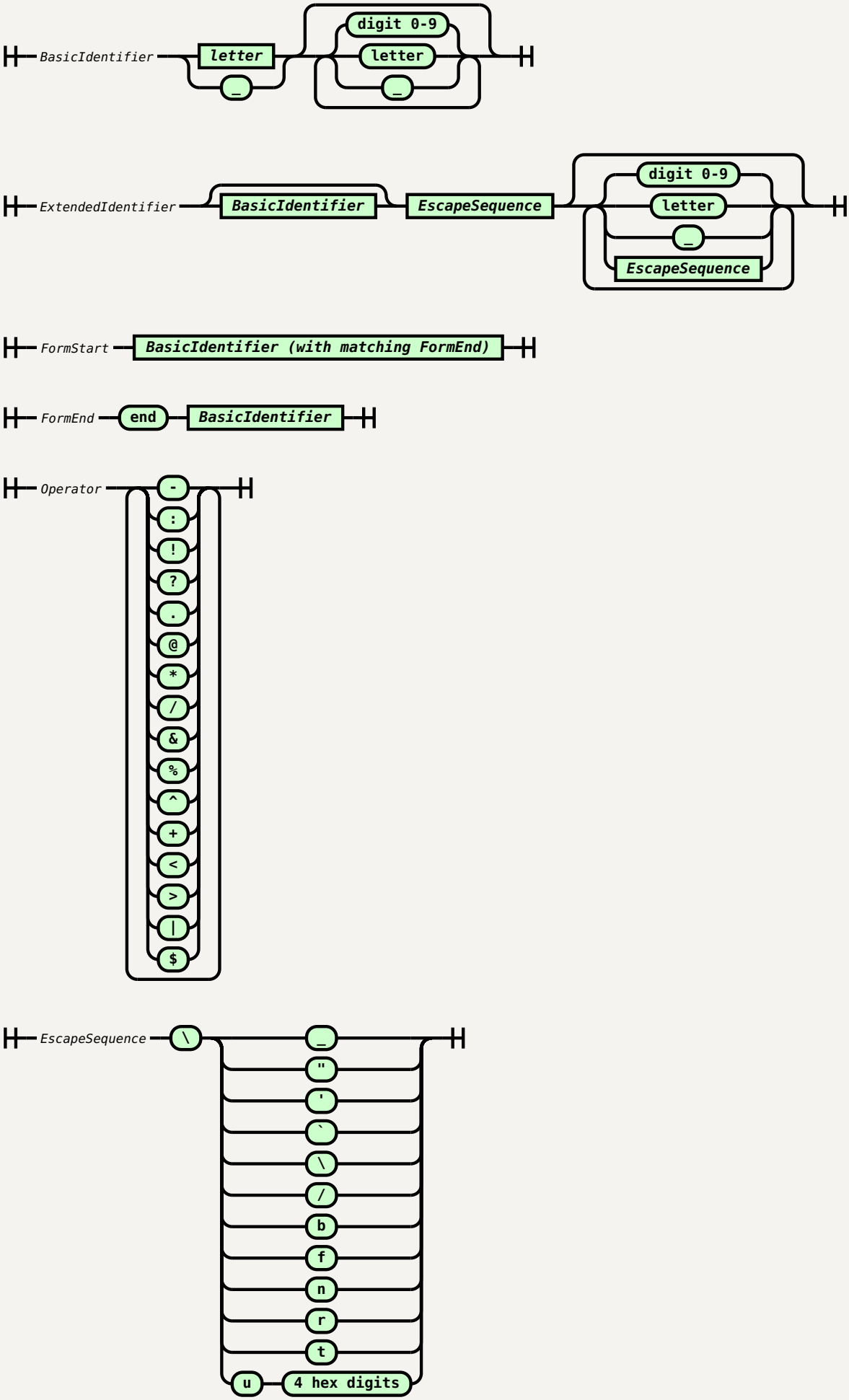
BasicIdentifier
letter
_
digit 0-9
letter
_
ExtendedIdentifier
BasicIdentifier
EscapeSequence
digit 0-9
letter
_
EscapeSequence
FormStart
BasicIdentifier (with matching FormEnd)
FormEnd
end
BasicIdentifier
Operator
- : ! ? . @ * / & % ^ + < > | $
EscapeSequence
\
_ " ' ` \ / b f n r t
u
4 hex digits