Technical Memo

Project:	**Mt Crosby East Bank WTP Filter Refurbishment**	*Project Code:*	83504178
Date:	30 October 2017	*Memo No.:*	1
To:	Bart Vervetjes, Seqwater		
From:	Steve Moore		
Subject:	**Filter Media Selection**		

Rev. No.	Date	Description	Prepared By	Checked By	Reviewed By	Approved By
1	30/10/17	Draft for Client	CP	MA	JB	SM

1. INTRODUCTION

Stantec has been engaged by Seqwater to provide engineering design services for the filter refurbishment works at the Mt Crosby East Bank WTP. This report outlines the previous work undertaken by Seqwater in the selection and pilot testing of filter media for the proposed refurbishment and provides recommendations with respect to the proposed media configuration for the filter upgrade works.

2. FILTER MEDIA

2.1 EXISTING FILTERS

The existing East Bank filters consist of a mono-media configuration, featuring 650 mm of 0.95 mm effective size (ES) filter sand. Previous studies *"East Bank Filter Refurbishment – Preliminary Design Report, QE99091 – Feb 2014"*.have identified the following issues with the performance of the current filters:

- at the plant peak production rate of 650 ML/d, the filtration rate is approximately 14 $m^3/m^2/hr$ (m/h), which exceeds the recommend rate of 8 m/h for a configuration of this type, representing a moderate process risk according to Seqwater's Unit Process Design Guideline Values (UPDGVs);
- the media depth to media size ratio (L/d) is only 632, representing another high risk according to the UPDGVs, where the UPDGV requirement is greater than 1250;
- at full flow the filters achieve only 15 hours run time, significantly less than the 24 hours nominated in the UPDGV;
- during dirty water events, the solids loading onto the filters is greatly increased and the solids capture capacity is insufficient to maintain sustainable run times, resulting in the plant production capacity needing to be reduced;
- loss of media during backwashing due to excessive backwash flow rates;
- turbidity spikes in the filtered water have been recorded that exceed the required targets for effective protozoa removal.

2.2 PRELIMINARY DESIGN FILTER MEDIA CONFIGURATION

The current filters are planned to be refurbished and the current media configuration will be replaced with a dual media (filter coal over sand).

The proposed configuration as recommended in the SKM *"East Bank Filter Refurbishment – Preliminary Design Report, QE99091 – Feb 2014"* was for a 885mm layer of 1.2mm ES filter coal overlaying a 300mm layer of 0.65mm ES sand. This provided an L/d of 1200.

2.3 PILOT TESTING

Given the strategic importance of the Mt Crosby East Bank WTP, Seqwater commissioned pilot testing to confirm the media configuration. This work was undertaken by Hunter Water Australia and reported in the *"Mt Crosby Eat Bank WTP Filtration Pilot Trial – March 2015".*

Three filter columns were used for the initial pilot testing:

- filter 1 was a replication of the existing Mt Crosby East Bank WTP filters;
- filter 2 was the recommended dual media (filter coal/sand) filter configuration taken from the *"East Bank Filter Refurbishment – Preliminary Design Report, QE99091 – Feb 2014"* but with a filter coal size of 1.3mm ES and an increase in depth from 885mm to 960mm to maintain the L/d of 1200;
- filter 3 was a deep bed mono-media sand filter using the same 0.95mm ES sand media as the existing filters increased from 650mm to 1140mm to provide a L/d of 1200

The outcome of the initial pilot testing was that:

- none of the filter configurations were able to meet the filtered water turbidity targets without pre-filter chemical dosing;
- the application of filter aid polymer and pre-filter chlorine dosing enabled improvements in both turbidity and particles such that both the ADWG and Seqwater turbidity targets were achieved;
- the dual media filter achieved significantly longer run times;
- the mono-media filters could achieve superior turbidity to the dual media filter under optimum dosing conditions, however the shorter run times were considered a significant disadvantage, especially given that the testing was undertaken under good raw water quality conditions. Under a poor raw water quality event it was considered possible that the settled water quality could deteriorate to the extent that the mono-media configurations would therefore not achieve the filter run time targets due to the high solids loading rate.

As such, the dual media filter is considered to be a more robust solution and was taken forward for further pilot testing to optimise the arrangement using three alternative configurations for a dual media filter:

- filter 1 had a 660mm layer of the filter coal over a 600mm layer of 0.65mm ES sand, providing a L/d of 1431, selected on the basis that a deeper sand layer may improve the turbidity removal;
- filter 2 remained the same as for the initial pilot testing;
- filter 3 had a 960mm layer of the 0.9mm ES filter coal over a 300mm layer of 0.55mm ES sand, providing a L/d of 1632, selected on the basis that a finer coal may perform better.

The outcome of this further pilot testing was that:

- all filters achieved the 95th percentile turbidity targets in the first run of this phase, with filters 1 and 3 achieving marginally better turbidity than filter 2;
- filter 3 achieved a significantly shorter run time than the other two filters;
- the deeper filter sand layer in filter 1 consistently enabled it to achieve better turbidity removal than filter 2;
- both filter 1 and filter 2 achieved run times in excess of 40 hours for all pilot test conditions, with filter 2 achieving the longer run times;
- maintaining filter aid polymer and free chlorine critical for filter performance;
- filtered turbidity and particle removal was improved at the higher alum doses.

From all testing undertaken and documented, the preferred media configuration for the upgrade of the Mt Crosby East Bank WTP, Hunter Water Australia concluded that:

"….a filter featuring 600 mm of 0.65 ES filter sand and approximately 660 mm of 1.2 mm filter coal achieved excellent turbidity and particle removal, along with long run times. This is the preferred media configuration for the Mt Crosby East Bank WTP filter upgrade……"

This media configuration has been proposed in Table 2.4 of the Seqwater Detailed Design Scope of Works for the project. The Uniformity Coefficients of both media is to be less than or equal to 1.35.

2.4 FILTER MODELLING

Selecting an optimal filter media configuration is important for efficient performance and operation of the rehabilitated filter. The evaluation of the media configuration is a key aspect of the design. A good media selection should strike the right balance between headloss characteristics (for good filter run time) and turbidity removal performance (for good filtered water quality), while also meeting the criteria for balance between layers.

Stantec has a proprietary dual-media filter performance model (**Figure 1**) which we use in many filter design projects to evaluate filter performance and run what-if analyses of alternative media configurations. The pilot testing conditions and data was used to calibrate the model and compare the performance of the filter 1 and filter 2 configurations used in the second round of pilot testing.

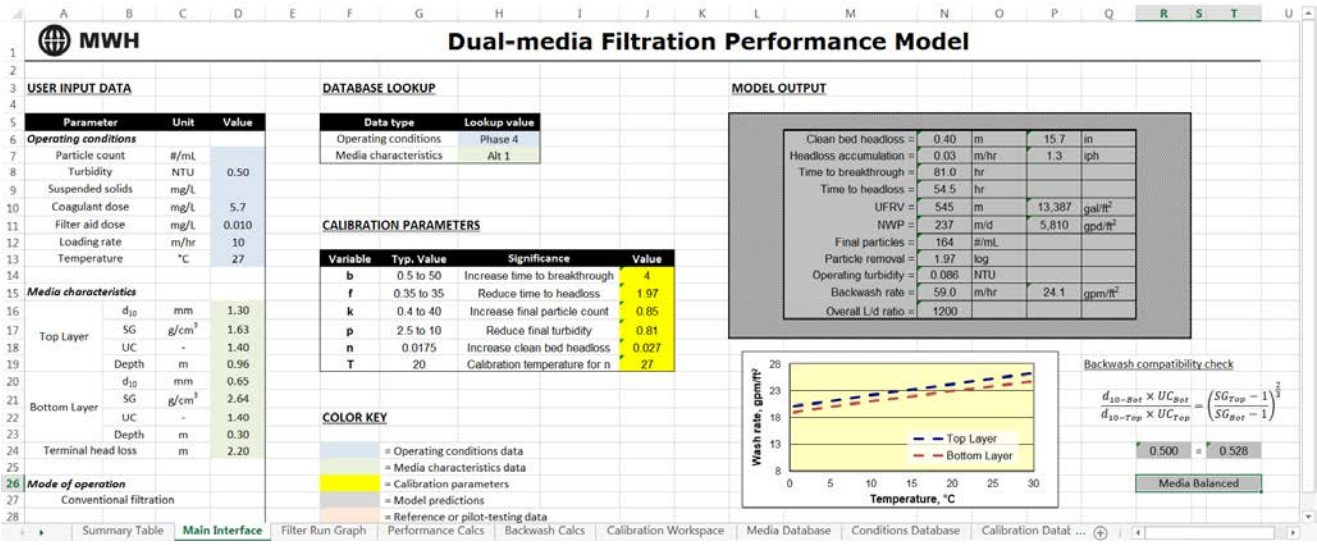

Figure 1 – MWH Dual-Media Filter Model Screenshot Filter 1

Based on a filtration rate of 10m^3/m^2/hr with a water temperature of 27degC, an alum dose rate of 5.7mg/L and a filter aid dose rate of 0.010mg/L, filter 1 and filter 2 to match the pilot testing, the model forecasts operating turbidities of 0.08NTU and 0.09NTU respectively. Filter run times for differing quality of settled water were limited by overall headloss (assumed maximum 2.2m) rather than turbidity breakthrough and are shown in Table 1.

Table 1 – Filter run times at loading rate of 10m^3/m^2/hr.

Settled water turbidity (NTU)	Filter 1 run time (hours)	Filter 2 run time (hours)
0.5	48.5	54.5
1.0	24.2	27.3
2.0	12.1	13.6

The modelling forecast that whilst both filter configurations will meet the filtered water turbidity targets, filter 1 turbidity is slightly lower (around 7% less). Also, as was observed during the pilot testing, the filter 2 configuration was forecast to have a lower clean bed headloss and lower rate of accumulation of headloss due to the greater depth of the larger filter coal media providing longer filter run times (around 12% longer).

The requirements in Appendix B of the Detailed Design Scope of Works is for a turbidity of 2NTU under normal operation for a plant production capacity up to 650ML/day.

If the filtration rate is increased to 14m^3/m^2/hr to meet the overall WTP capacity of 650Ml/day, the filter run times will be reduced and the estimated filter performance will be as shown in Table 2. The relative difference in filter run times between filter 1 and filter 2 becomes greater with the filter 2 run times being around 20% longer. Run times are also slightly less with lower temperature water.

Table 2 – Filter run times at loading rate of 14m³/m²/hr.

Settled water turbidity (NTU)	Filter 1 run time (hours)	Filter 2 run time (hours)
0.5	29.4	35.5
1.0	14.7	17.7
2.0	7.4	8.9

From our review of the pilot study work, it is considered that the amount of alum being dosed may have been too low as it would be highly unusual for media filters with L/d > 1,000 to have filtrate turbidity > 0.1 NTU with sufficient coagulation. Optimizing the alum dose will be essential regardless of the media configuration adopted.

Short filter runs and high solids loading during dirty water events has been identified by Seqwater as a key operational issue. It was noted that the raw water quality was very good during the pilot testing work, and as such the actual performance of the filter if the settled water quality deteriorates is less certain, especially in relation to filter run time. Stantec would expect that the filter 2 configuration with a deeper layer of filter coal would deliver better performance under such conditions.

The design requirement as outlined in the Preliminary Design report was for a minimum of 12 hours filter run time at a raw water turbidity of 1,000 NTU and plant production rate of 200 Ml/day. The requirements in Appendix B of the Detailed Design Scope of Works is for a turbidity of 3NTU under such a poor turbidity event. Our filter model (un-calibrated) predicts that both the filter 1 and filter 2 media configurations would achieve this requirement.

2.5 FILTER MEDIA COMPATIBILITY AND FREEBOARD

Filter media compatibility

The pilot testing and filter modelling was undertaken using specific filter media characteristics. In Australia, bituminous coal is typically used for the upper layer of dual media filters. Filter coal has a SG of around 1.45.

Compatibility between the two layers of media is one of the most important considerations in the design of a dual media filter. Balancing the media such that under backwash the two layers expand equally is a function of the physical parameters of each media. A balanced media selection will prevent intermixing, thereby preserving the layer separation and preventing excessive headloss development at the interface. Poor media balance will result in filter blinding at the interface and increased empty bed headloss.

An assessment of suitable media sizes for filter coal and to achieve a balanced condition is shown in Table 3.

Table 3 – Options for media balance – filter coal and sand

Seqwater Mt Crosby Filter Rehab

Options for Media Balance - Filter Coal

Specific Gravities			Uniformity Coefficients		Compatibility Limits:	
Sand SG =	2.64	g/mL	Sand UC =	1.35	Balance within ±	0.05
Filter Coal SG =	1.45	g/mL	Anthracite UC =	1.35		

Balance Evaluation

Sand (mm) / Filter Coal (mm)	0.60	0.61	0.62	0.63	0.64	0.65	0.66	0.67	0.68	0.69	0.70	0.71	0.72
1.40	0.01	0.01	0.02	0.03	0.03	0.04	0.05	0.06	0.06	0.07	0.08	0.08	0.09
1.41	0.00	0.01	0.02	0.02	0.03	0.04	0.05	0.05	0.06	0.07	0.07	0.08	0.09
1.42	0.00	0.01	0.01	0.02	0.03	0.04	0.04	0.05	0.06	0.06	0.07	0.08	0.08
1.43	0.00	0.00	0.01	0.02	0.03	0.03	0.04	0.05	0.05	0.06	0.07	0.07	0.08
1.44	0.01	0.00	0.01	0.02	0.02	0.03	0.04	0.04	0.05	0.06	0.06	0.07	0.08
1.45	0.01	0.00	0.01	0.01	0.02	0.03	0.03	0.04	0.05	0.05	0.06	0.07	0.07
1.46	0.01	0.00	0.00	0.01	0.02	0.02	0.03	0.04	0.04	0.05	0.06	0.06	0.07
1.47	0.01	0.01	0.00	0.01	0.01	0.02	0.03	0.03	0.04	0.05	0.05	0.06	0.07
1.48	0.02	0.01	0.00	0.00	0.01	0.02	0.02	0.03	0.04	0.04	0.05	0.06	0.06
1.49	0.02	0.01	0.01	0.00	0.01	0.01	0.02	0.03	0.03	0.04	0.05	0.05	0.06
1.50	0.02	0.02	0.01	0.00	0.00	0.01	0.02	0.02	0.03	0.04	0.04	0.05	0.06
1.51	0.02	0.02	0.01	0.01	0.00	0.01	0.01	0.02	0.03	0.03	0.04	0.05	0.05
1.52	0.03	0.02	0.01	0.01	0.00	0.01	0.01	0.02	0.03	0.03	0.04	0.04	0.05
1.53	0.03	0.02	0.02	0.01	0.00	0.00	0.01	0.02	0.02	0.03	0.04	0.04	0.05
1.54	0.03	0.03	0.02	0.01	0.01	0.00	0.01	0.01	0.02	0.03	0.03	0.04	0.05
1.55	0.04	0.03	0.02	0.02	0.01	0.00	0.00	0.01	0.02	0.02	0.03	0.04	0.04
1.56	0.04	0.03	0.02	0.02	0.01	0.01	0.00	0.01	0.01	0.02	0.03	0.03	0.04
1.57	0.04	0.03	0.03	0.02	0.01	0.01	0.00	0.00	0.01	0.02	0.02	0.03	0.04
1.58	0.04	0.04	0.03	0.02	0.02	0.01	0.00	0.00	0.01	0.01	0.02	0.03	0.03
1.59	0.04	0.04	0.03	0.03	0.02	0.01	0.01	0.00	0.01	0.01	0.02	0.02	0.03
1.60	0.05	0.04	0.03	0.03	0.02	0.02	0.01	0.00	0.00	0.01	0.02	0.02	0.03

Specified Size Range

If filter coal is used, the effective media size will need to be around 1.5mm to match the 0.65mm sand which will have an SG of around 2.64.

The use of ES 1.2mm filter coal over ES 0.65mm sand is not recommended as the backwash rates for the 20% expansion of 0.65mm sand will result in between 40% and 45% expansion of ES 1.2mm filter coal. For ES1.3mm filter coal this would be between 35% and 40%.

Using our preferred size for filter coal, we have calculated the overall L/d of the filter for a number of media depths. This is shown in Table 4.

Table 4- L/d values for a range of filter media depths

Seqwater Mt Crosby Filter Rehab

Media Configuration Alternatives

Parameter	Unit	Filter Coal				
		Alternative A	Alternative B	Alternative C	Alternative D	Alternative E
Filter coal ES	mm	1.5	1.5	1.5	1.5	1.4
Filter coal Depth	mm	660	760	830	900	980
Sand ES	mm	0.65	0.65	0.65	0.65	0.6
Sand Depth	mm	600	500	430	400	300
Total Bed Depth	mm	1260	1260	1260	1300	1280
L/d Ratio	-	1363	1276	1215	1215	1200

If 1.5mm ES filter coal is used, the L/d of the filter 1 configuration (660mm filter coal and 600mm sand) would drop to 1363 and the L/d of filter 2 configuration (960mm filter coal and 300mm sand) would drop to 1100 which is lower than the Seqwater minimum requirement of 1200. To maintain a L/d of 1200 within the total bed depth of 1260mm, the maximum depth of ES1.5mm filter coal permissible would be 830mm filter coal (over 430mm of sand) which is shown as Alternative C in Table 4.

More preferably, a 900mm filter coal depth could be provided over a sand layer of 400mm (Alternative D in Table 5).

Alternatively a 980mm layer of ES 1.4mm filter coal over a 300mm layer of ES 0.60mm sand would have an L/d of 1200 (Alternative E).

The dual media filter model was run again with a 900mm layer of the ES1.5mm filter coal over a 400mm layer of ES0.65mm sand. Whilst not fully calibrated for these conditions, the model does forecast a filter run time of 16 hours with a settled water turbidity of 2NTU and a loading rate of 10m/hr. This is substantially longer filter run time under poor settled water quality conditions than for the filter using ES1.3mm filter coal as shown in Table 1, without any increase in operating turbidity.

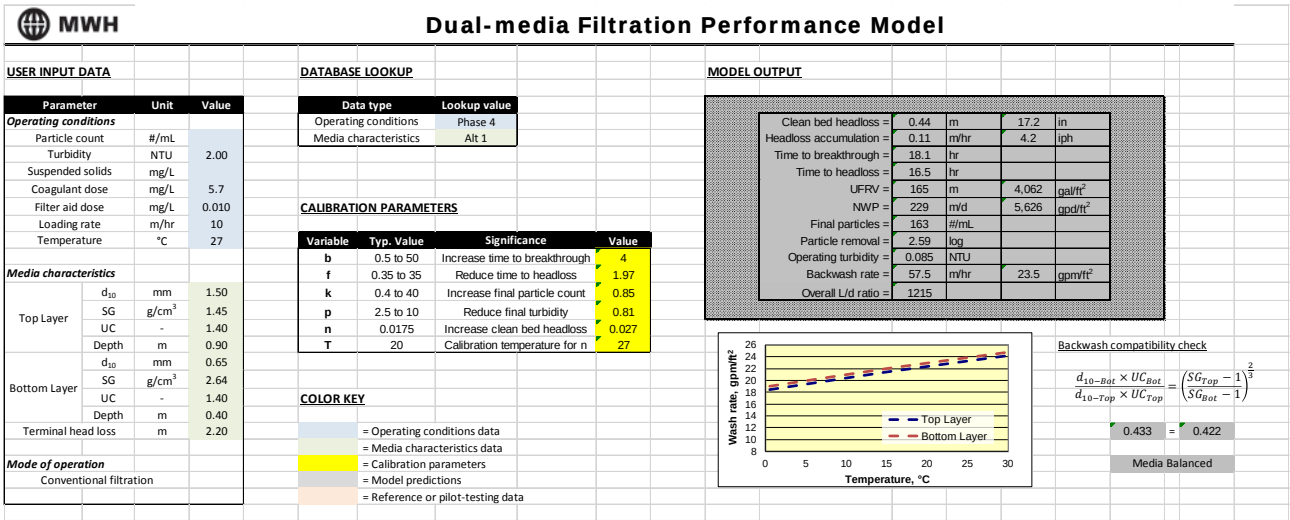

MWH

Dual-media Filtration Performance Model

USER INPUT DATA

Parameter		Unit	Value
Operating conditions			
Particle count		#/mL	
Turbidity		NTU	2.00
Suspended solids		mg/L	
Coagulant dose		mg/L	5.7
Filter aid dose		mg/L	0.010
Loading rate		m/hr	10
Temperature		°C	27
Media characteristics			
Top Layer	d_{10}	mm	1.50
	SG	g/cm^3	1.45
	UC	-	1.40
	Depth	m	0.90
Bottom Layer	d_{10}	mm	0.65
	SG	g/cm^3	2.64
	UC	-	1.40
	Depth	m	0.40
Terminal head loss		m	2.20
Mode of operation			
Conventional filtration			

DATABASE LOOKUP

Data type	Lookup value
Operating conditions	Phase 4
Media characteristics	Alt 1

CALIBRATION PARAMETERS

Variable	Typ. Value	Significance	Value
b	0.5 to 50	Increase time to breakthrough	4
f	0.35 to 35	Reduce time to headloss	1.97
k	0.4 to 40	Increase final particle count	0.85
p	2.5 to 10	Reduce final turbidity	0.81
n	0.0175	Increase clean bed headloss	0.027
T	20	Calibration temperature for n	27

COLOR KEY

= Operating conditions data
= Media characteristics data
= Calibration parameters
= Model predictions
= Reference or pilot-testing data

MODEL OUTPUT

Clean bed headloss =	0.44	m	17.2	in
Headloss accumulation =	0.11	m/hr	4.2	iph
Time to breakthrough =	18.1	hr		
Time to headloss =	16.5	hr		
UFRV =	165	m	4,062	gal/ft^2
NWP =	229	m/d	5,626	gpd/ft^2
Final particles =	163	#/mL		
Particle removal =	2.59	log		
Operating turbidity =	0.085	NTU		
Backwash rate =	57.5	m/hr	23.5	gpm/ft^2
Overall L/d ratio =	1215			

Backwash compatibility check

$$\frac{d_{10-Bot} \times UC_{Bot}}{d_{10-Top} \times UC_{Top}} = \left(\frac{SG_{Top}-1}{SG_{Bot}-1}\right)^{\frac{2}{3}}$$

0.433 = 0.422

Media Balanced

Figure 2 – MWH Dual-Media Filter Model Screenshot Filter Alternative D

It is important that the Tenderers properly match the Effective Size, Uniformity Coefficient and Specific Gravity of the filter media materials for to ensure backwash compatibility. Assuming filter coal is adopted for the upper layer, our preference would be for the Alternative G filter configuration. To allow Seqwater to have some flexibility in the selection of the final configuration for the filter media, it is considered that the elevation of the new filter launders and support wall should be developed based on an overall media depth of at least 1300mm.

Filter media freeboard

The existing filter sand expands up to 26% during backwash. We would recommend a minimum expansion for the new media of at least 20%. The media freeboard is defined as the vertical distance from the top of the media to the bottom of the backwash troughs. Because the backwash troughs occupy a significant portion of the cross-sectional area of the filters, water accelerates when it reaches this point to greater than the nominal backwash velocity. Therefore, it is important for expanded media not to reach the troughs so as to prevent media loss. To reduce media loss, Stantec would typically recommend that the media freeboard criteria should be at least 30% bed expansion space plus 30 mm from the top of the expanded media to the bottom of the trough. Based on a media depth of 1,300mm this equates to a minimum of 420mm. Where possible, more space is preferable, especially if there are large variations in backwash water temperature or the risk of higher backwash flowrates through the filter due to control malfunction.

A more detailed assessment of the filter backwash arrangements and control is being undertaken and will be provided in a separate Technical Memorandum.

3. CONCLUSIONS

From the pilot work undertaken by Seqwater and the filter modelling undertaken by Stantec we conclude:

- the filter 1 media configuration of 660mm of ES 1.3mm filter coal over 600mm of ES 0.65mm filter sand achieved the lower operating turbidity;
- the filter 2 media configurations of 960mm of ES 1.3mm filter coal over 300mm of ES 0.65mm filter sand achieved the longer filter run times;
- the use of filter aid polymer and pre-filter chlorine dosing was required to meet the filtered water turbidity targets. As the backwash water is also chlorinated, the filter underdrainage systems will need to be compatible with chlorinated water;
- filter run times are very dependent on the settled water turbidity, with total headloss driving the filter run times rather than turbidity breakthrough;
- filter modelling would suggest that the filter 2 configuration provides significantly longer (20%) filter run times at the higher flowrate of 650Ml/day;
- a filter with a L/d of 1200 is considered appropriate;
- to achieve a balanced dual filter media using filter coal and sand, a 1.5mm ES filter coal over the 0.65mm ES sand is required,
- to provide higher filtration rates/longer filter run times under poor settled water quality conditions, our recommendation would be for Seqwater to adopt the Alternative D configuration in Table 4, with a Uniformity Coefficient of 1.35 or less;
- final selection of media size to achieve backwashing compatibility between the filter coal/anthracite and filter sand may depend on the cost and availability of the materials within the local market;
- to allow for some flexibility in the configuration for the filter media, now and in the future, it is considered that the height of the new filter launders and support wall should be developed based on an overall dual media depth of at least 1300mm, excluding any support media (if required);
- a minimum freeboard allowance from the top of the filter media to the underside of the new filter launders is at least 420mm and preferably greater if the filter configuration will accommodate this. Further work on the backwash rates and control requirements will be undertaken to confirm the freeboard requirement.

STANTEC AUSTRALIA PTY LTD

Technical Memo

Project:	**Mt Crosby East Bank WTP Filter Refurbishment**	***Project Code:***	83504178
Date:	7 November 2017	***Memo No.:***	2
To:	Bart Vervetjes, Seqwater		
From:	Steve Moore		
Subject:	**Filter Backwashing**		

Rev. No.	Date	Description	Prepared By	Checked By	Reviewed By	Approved By
1	7/11/17	Draft for Client	CP	MA	JB	SM

1. INTRODUCTION

Stantec has been engaged by Seqwater to provide engineering design services for the filter refurbishment works at the Mt Crosby East Bank WTP. This technical memorandum outlines the previous work undertaken by Seqwater in the assessment of filter backwashing requirements for the proposed refurbishment and provides recommendations with respect to the proposed backwashing rates and control requirements for the filter upgrade works, considering the assessment of the filter media provided in Technical Memo No.1

2. DESIGN BACKWASH RATE

2.1 PREVIOUS REPORTS

In the *"East Bank Filter Refurbishment – Preliminary Design Report, QE99091 – Feb 2014"* the requirements for high backwash flow rates for the new media were as shown in Table 1.

Table 1 Backwash flowrates from the Preliminary Design Report

Temp (deg C)	Rise Rate (m/hr)	Flowrate (m^3/hr)	Flowrate (L/sec)
27	35.7	3,475	965
9	28.0	2,729	758

A low rate wash using combined air and water was proposed at between 12 and 20 m/hr.

These flow rates were also used for the *"Design Report Replacement Backwash Main Filter Stage 1 and 2, Cardno April 2015."* This report also included the backwash main design criteria of 4,865 m^3/hr (1,350 L/sec and a rise rate of 50 m/hr) for the maximum flow and 2,724 m^3/hr (757 L/sec and a rise rate of 28 m/hr) for the minimum flow.

Seqwater has upgraded the backwash feed to the filters, with a connection between the Stage 1&2 and Stage 3&4 backwash headers and a separate feed from each end, both fitted with a needle valve for flow control. The hydraulic analysis undertaken (refer Cardno report section 2.5.1) estimated the maximum possible flow rate to a filter would be 2,445 L/sec falling to 2,190 L/sec as filter water level rises with all valves open.

For the proposed filter refurbishment a combined air scour low rate water wash will be used followed by the high rate backwash. The low rate wash will be applied for an adjustable time period (e.g. typically 2 to 4 minutes). The high rate wash will then begin with the goal of purging all entrained air from the media prior to the water level in the filter reaching the bottom of the launders. Subsequently the filter water level will be constant during the high rate wash and the maximum rate of 2,190 L/sec would therefore apply.

It was also noted that section 3.5 of the same report suggested that the maximum flow could be as high as 2,700 L/sec if the flow control valves and filter backwash inlet valve were fully open, which appeared to contradict the earlier figures. Subsequent work to be completed as part of this project on the plant hydraulics will review the capacity of the backwash system.

2.2 DETAILED DESIGN SCOPE

Table 2.2 of The Mt Crosby East Bank WTP Filter Upgrade Detailed Design Scope of Works prescribes a design backwash temperature range between 14 and 32 degC. Table 2.3 requires a minimum media expansion of 20% during backwash at 20degC and Table 14.9 (Appendix A) provides a guide of a low rate backwash with air scour rate of 50-60m/hr and wash rate of 12-20 m/hr and a high rate backwash between 28 and 36m/hr (which are the same as the rates stated in Table 1 for a temperature range of 9 to 27degC). This table also states that the maximum available backwash rate with both control valves open is 1650L/sec. This value is not consistent with the capacity determined by Cardno, and it is unclear whether this is based on an alternative hydraulic operating scenario, or some other flow limiting control. This Table also prescribes a media expansion of 20% plus or minus 1% at 32 degC.

2.3 ESTIMATED BACKWASH RATES REQUIRED

Filter coal supplier James Cummings and Sons provided Figure 1 which shows the expansion of their filter coal media under backwash at 20degC, and Figure 2 which provides the correction factors to be applied to the bed expansion rate for temperatures between 5 and 35 degC. For the 1.5mm ES filter coal assessed in Technical Memorandum Number 1 – Filter Media Selection, a 20% bed expansion would represent a target backwash flowrate of approximately 46 m/hr at 20degC and a range of 41 to 55 m/hr over the design backwash temperature range.

These backwash rates are approximately 50% higher than the rate noted in Section 2.2.

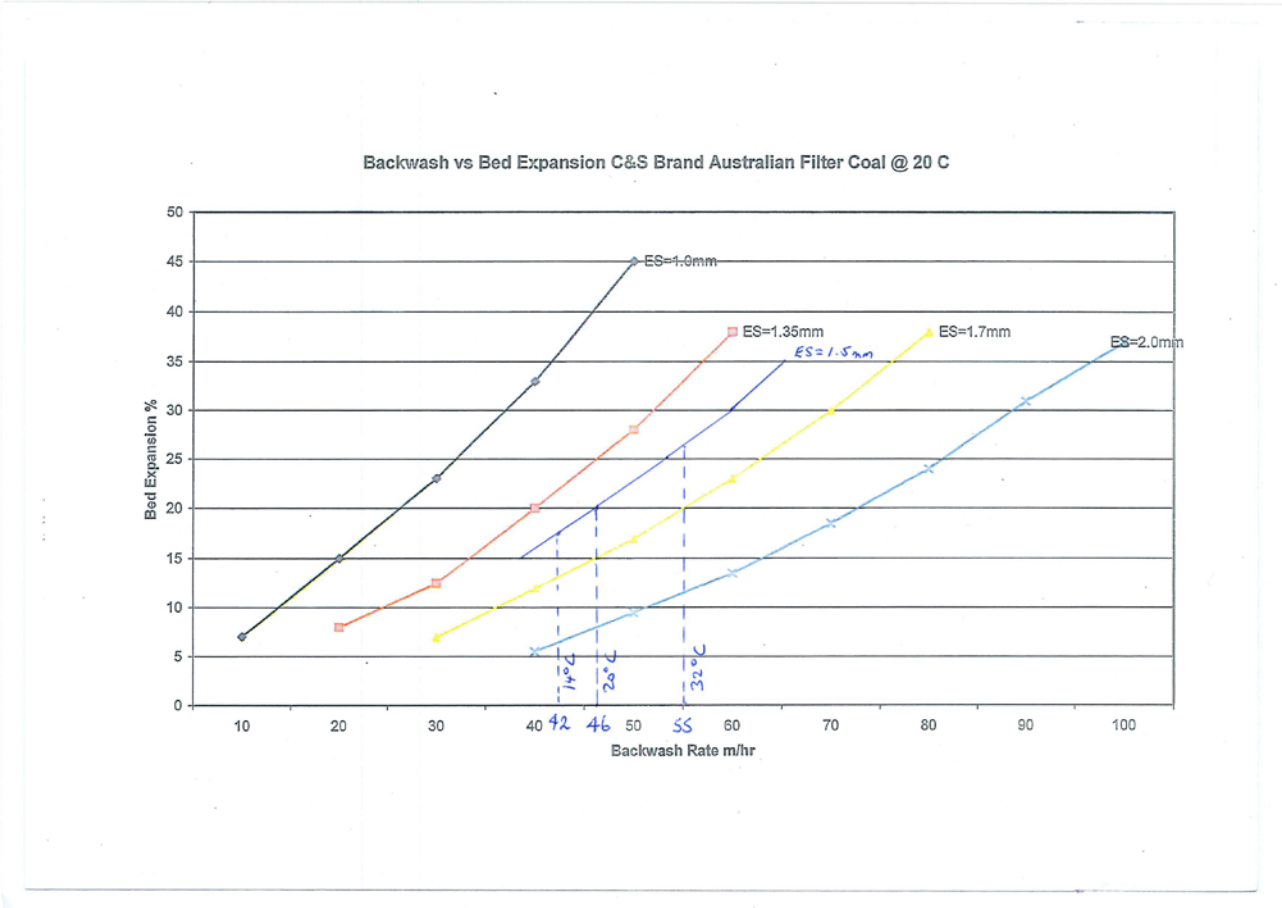

Figure 1 – Filter Coal Bed Expansion Curves at 20degC

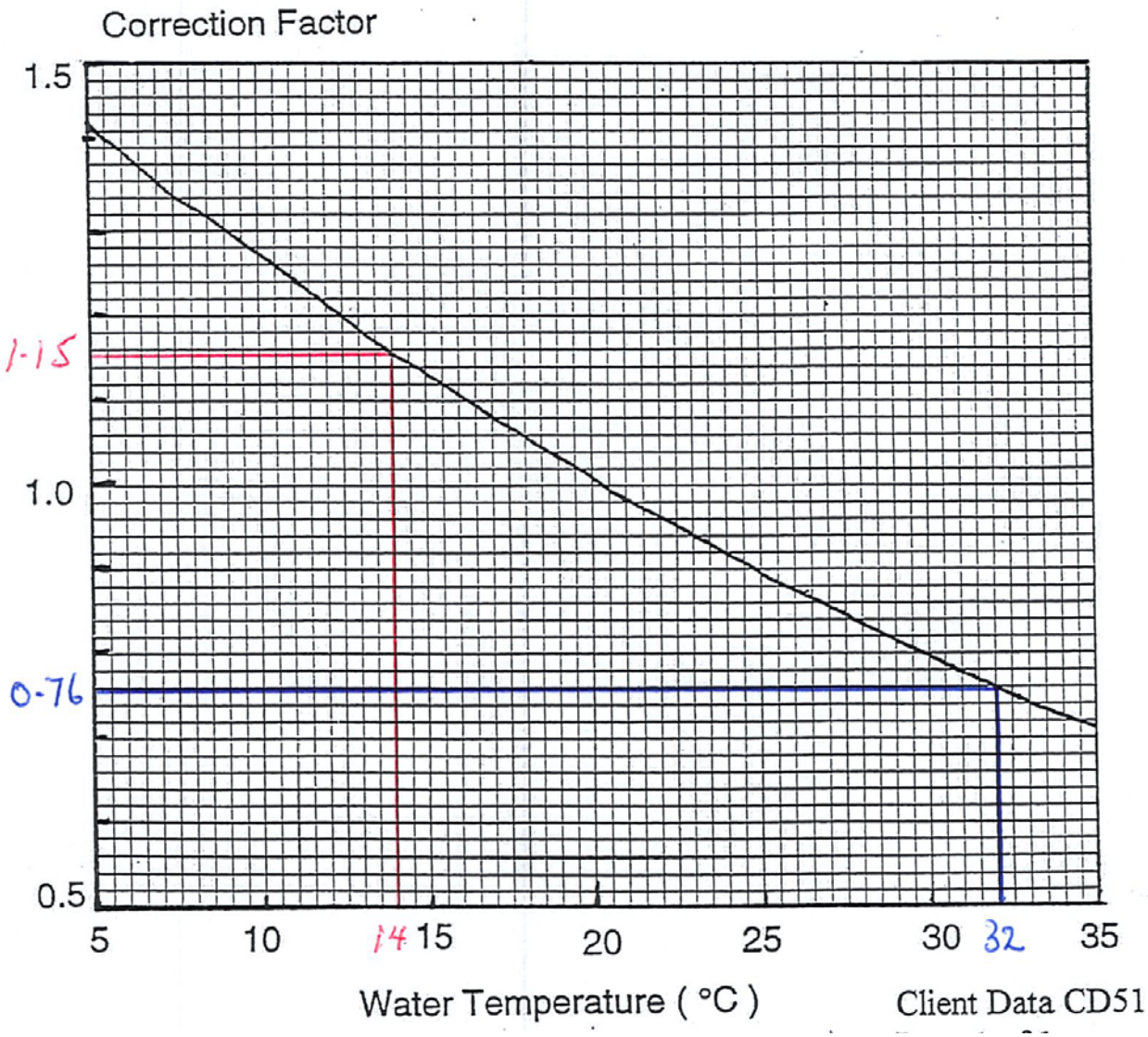

Figure 2 – Filter coal bed expansion temperature correction curve

Filter sand supplier River Sands provided the bed expansion curves shown in Figure 3 for ES0.65mm sand with a Uniformity Coefficient of 1.35. This indicates a backwash rate ranging between about 52 and 59m/hr.

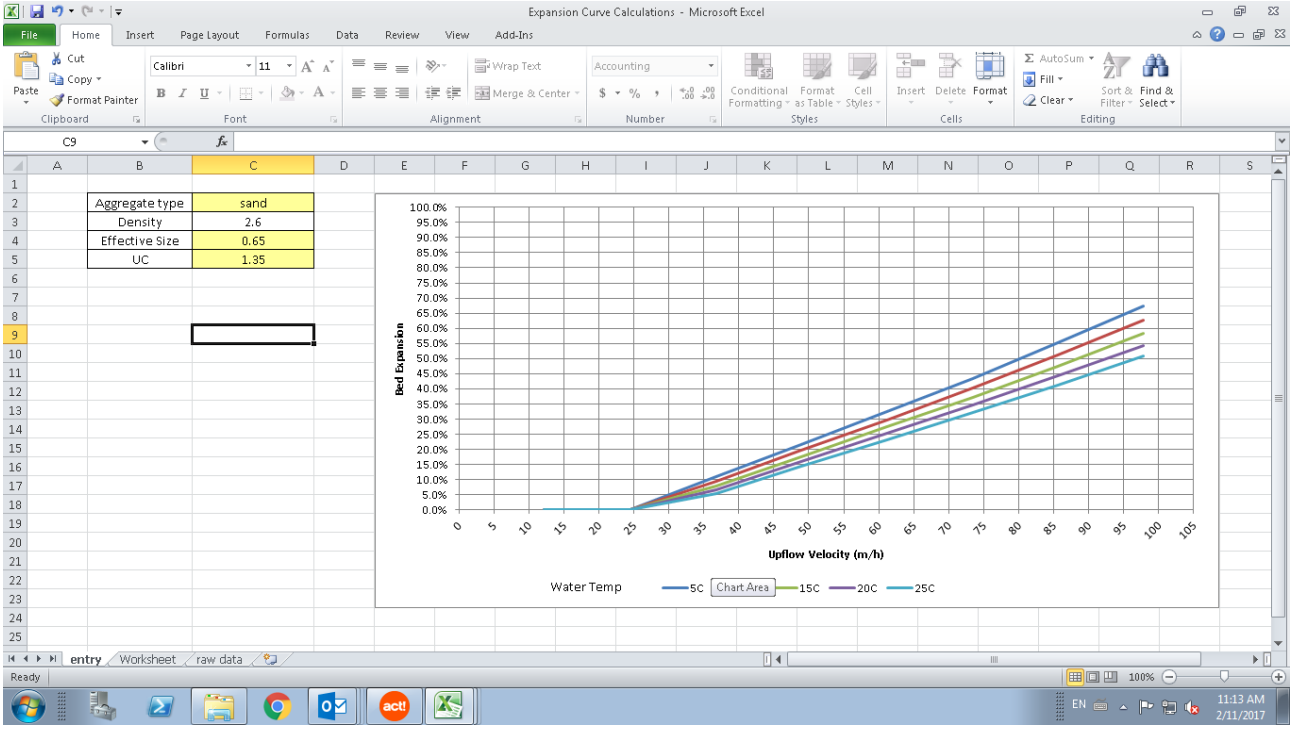

Figure 3 – Bed expansion curve ES 0.65mm sand

For high rate filters, Stantec generally uses the following formula to determine the backwash rates of the sand and filter coal for media compatability. This is taken from Kawamura, S., "Design and Operation of High-Rate Filters - Part I," J. AWWA, 10/75:

$$V_{Backwash} = \kappa \left(\frac{\rho_{Media} - \rho_{Water}}{\rho_{Water}} g \right)^{\frac{2}{3}} \nu_{Water}^{-\frac{1}{3}} d_{60}$$

It should be noted that this formula uses the d_{60} value for the media whilst the Effective Size of the media which is used for the general selection is specified as the d_{10} value. Hence for an ES 0.65mm sand media with a Uniformity Coefficient of 1.35, we have a d_{60} of 0.88m for initial modelling purposes (i.e. 0.65mm x 1.35).

Using the above formula for the proposed filter media, we obtain the backwash rates shown in Table 2 for the high rate wash. Using the bed expansion curves provided, these rates will provide a media expansion of approximately 25% at 20degC for the ES1.5mm filter coal and an expansion of 20% for the ES 0.65mm filter sand.

The rate for the combined air and water low rate wash between 12 and 20 m/hr as proposed in sections 2.1 and 2.2 above is considered appropriate.

Table 2 Calculated backwash rates for filter coal and sand media using Kawamura formula

Filter Coal d_{60} =	2.025	mm							
Temperature	**°C**	**9**	**10**	**14**	**15**	**20**	**25**	**30**	**32**
Backwash velocity	m/hr	47.7	48.1	50.0	50.5	52.8	55.0	57.1	58.0
	L/sec	1278	1291	1341	1354	1415	1474	1531	1554
Sand d_{60} =	0.88	mm							
Temperature	**°C**	**9**	**10**	**14**	**15**	**20**	**25**	**30**	**32**
Backwash velocity	m/hr	48.9	49.4	51.3	51.8	54.1	56.2	58.3	59.2
	L/sec	1311	1324	1376	1388	1450	1508	1564	1586

At 32 deg. C this gives a design maximum backwash rise rate of 58 m/hr which is approximately 60% higher than the rate noted in section 2.2.

Due to the variability in required backwash flow rate as a result of the large temperature variation in the backwash water over the year, a temperature adjusted backwash flow rate should be adopted.

The high flow rate (>2200L/s, >82m/hr) that can occur if both control valves are fully opened is likely to result in significant loss of media and potentially damage the filter underdrains. This should be addressed with the backwash flow control arrangements and the provision of an emergency relief in the event of valve failure. This could be achieved with a relief vent on the backwash header. Such failure modes and precautionary design measures will be assessed in the design process

2.4 BACKWASH VOLUMES

The expected waste backwash volume will be in the order of 525 m^3 based on 2 to 4 minutes at low rate and a 5 minute wash cycle at high rate. This represents around 4.2 bed volumes. The volume of dirty backwash water to be treated will be around 430m^3 per backwash. Final requirements will be confirmed once the overall filter cross section is confirmed. Actual durations should be optimised after installation. Should the higher backwash rates be adopted, Seqwater needs to assess the capacity of the backwash balancing and treatment facility to manage the increased backwash volumes.

The waste backwash water turbidity can be a useful measure to control the duration of backwash cycle.

3. BACKWASH FLOW RATE CONTROL

The maximum uncontrolled flow rate into a filter during backwash could result in extensive media loss and possibly damage the new filter underdrains. Operating the backwash at the higher summer flow rate during the winter period would likely result in some of the filter coal media being washed out. The existing backwash flow rates will therefore need to be controlled using the two needle valves on the backwash pipeline feeding into the Stage 1 and Stage 4 filter backwash headers.

We understand that there is significant variability in the uncontrolled backwash flow rate between filters due to the effects of friction losses along the backwash header and the fact that the two control valves are different sizes. This will therefore result in differing backwash rates if a one setting suits all control principle is applied to the control valve positions

For the low rate wash, opening a single control valve to a pre-determined setting is likely to be suitable as the amount of headloss through the backwash header will be small at the low flow rates. Some reduction in the backwash upflow rate as the level in the filter rises would be acceptable as it would reduce the risk of media loss whilst the combined air and water wash was being undertaken.

Three alternative operational control options for the high rate wash have been identified which could be incorporated to manage flow rates and reduce risk of media loss or damage to the filter floors. The actual control philosophy to be adopted is dependent on the criticality of the variations in backwash rates and the level of complexity Seqwater is comfortable with in the backwash control system.

1. Under the current operating mode, the high level reservoir remains nearly full at all times. Given the relative size of the reservoir, this provides a virtually constant head supply feeding the backwash pipeline. Both flow control valves should have a standard set of operating characteristics. Hydraulic modelling (or site trial) of the system would provide the target settings for each control valve to achieve the individually required backwash flow rate for each filter. The PLC would automatically drive the valves to the specific target settings for the particular filter under backwash. There would be seasonal specific settings to account for water temperature variance over the year

2. Using hydraulic modelling the percentage opening of the control valves could be determined such that the minimum required backwash flow rate is achieved for all filters under all operating conditions. As this will result in the available backwash flow rate being higher than required for most of the filters, the requirements for each specific filter could then achieved by throttling the filter backwash inlet valve. Under this arrangement the control valves would always drive open to a prescribed setting and the individual filter backwash inlet valves would have a range of settings to allow for temperature variations. This provides a course control at the needle valves with a fine trim on the filter backwash inlet valve.

3. Using feedback control from a flow meter on the backwash pipeline would enable the control valve to be trimmed to match the target flow. This would remove the variability of flow between

individual filters and avoid the fall off in flow rate as the filter level rises. Under this operation the larger control valve would be driven to a maximum opening setting (this being less than the fully open position) and the smaller valve opens to a pre-set position before switching into modulating mode to trim the flow. The smaller valve would have a maximum percentage trim set in case the modulating control goes astray.

For each of the options, the backwash flow rate can be adjusted to match the temperature of the backwash water. This could be achieved by installing a temperature sensor at the high level reservoir and having a range of target flow settings depending on the water temperature. A likely approach would be to potentially have four seasonal settings applied to the control valves. The change of setting based on temperature would be a manual change by the operator, such that the system is not subject to automatic temperature adjustment and therefore vulnerable to sensor malfunction.

An overflow stack should also be installed on the new backwash header at the end of the Stage 2 filters to prevent excessive backwash flow rate/pressure that might wash out media or damage the filter floors. The functionality of this concept will be explored as part of the design and fail safe measures of the control system.

If a section of the backwash header pipework is isolated, as will be the case during the refurbishment works, or if one of the control valves is out of service, the control arrangements as outlined above would not be suitable as the maximum flow rate would be restricted. The previous hydraulic modelling undertaken by Cardno indicated that the backwash flow rate to the various filters would vary between 1,125 and 1,585 L/sec if the control valve to Stage 1 is closed; and between 975 and 1,165 L/sec if the control valve to Stage 4 is closed. The same rates would apply if a section of the backwash header was isolated. Although backwash rates greater than 1300L/s and up to 1600L/s are required for optimum backwash, a backwash rate of the order of 1000L/s will still provide a level of effectiveness (38m/hr) for short term operation, while the backwash main isolation is in place.

Backwash control option 3 is likely to provide the most accurate flowrate to all filters and would allow manual operation if the PLC is out. Backwash control option 1 above is considered as the most straightforward if the modelling shows that backwash flow rates can be maintained within an acceptable range for all filters.

Further assessment of the backwash header capacity and flow rate control will be undertaken once the hydraulic modelling work is undertaken. The operating speed of the control valves will also need to be ascertained.

4. CONCLUSIONS

It is concluded that:

- the required backwash upflow rate for a 1.5mm ES coal over 0.65ES sand filter media ranges from 50 to 58 m/hr over the temperature range of 14 to 32 deg.C respectively. These rates are considerably higher than the concept design backwash rates;
- due to the variability in required backwash flow rate as a result of the large temperature variation in the backwash water over the year, a temperature adjusted backwash flow rate should be adopted;
- the expected waste backwash volume will be in the order of 525 m3 based on 2 to 4 minutes at low rate and a 5 minute wash cycle at high rate. This represents around 4.2 bed volumes. The volume of dirty backwash water to be treated will be around 430m3 per backwash. Final requirements will be confirmed once the overall filter cross section is confirmed. This backwash volume could have implications in the capacity of the backwash treatment system;
- the maximum flow rate that can occur if both control valves are fully opened is likely to result in significant loss of media and potentially damage the filter underdrains. This should be addressed with the backwash flow control arrangements and the design should consider the provision of a relief vent on the backwash header;
- a number of alternative options are available to control the backwash flow rate with varying degrees of complexity. This will be further considered once the hydraulic modelling of the backwash system is undertaken.

Technical Memo

Project:	**Mt Crosby East Bank WTP Filter Refurbishment**	***Project Code:***	83504178
Date:	23 November 2017	***Memo No.:***	3
To:	Bart Vervetjes, Seqwater		
From:	Steve Moore		
Subject:	**Filter Underdrain Market Assessment**		

Rev. No.	Date	Description	Prepared By	Checked By	Reviewed By	Approved By
1		Draft for Client	MA	CP	SM	SM

1. INTRODUCTION

Stantec has been engaged by Seqwater to provide engineering design services for the filter refurbishment works at the Mt Crosby East Bank WTP. Seqwater is considering the use of an integrated underdrain system, which offers the possibility of both improved performance and easier installation compared to underdrains that are custom-designed and built in the field. This report outlines the various options for filter underdrain systems and provides recommendations for the approach to underdrain procurement.

2. FILTER CELL GEOMETRY LIMITATIONS

As a basis for the evaluation of underdrain systems, geometric constraints were identified and preliminary vertical profiles for the filter cells were developed, so as to identify the available depth of underdrain (and media support if required). The underlying logic is illustrated in **Figure 1.**

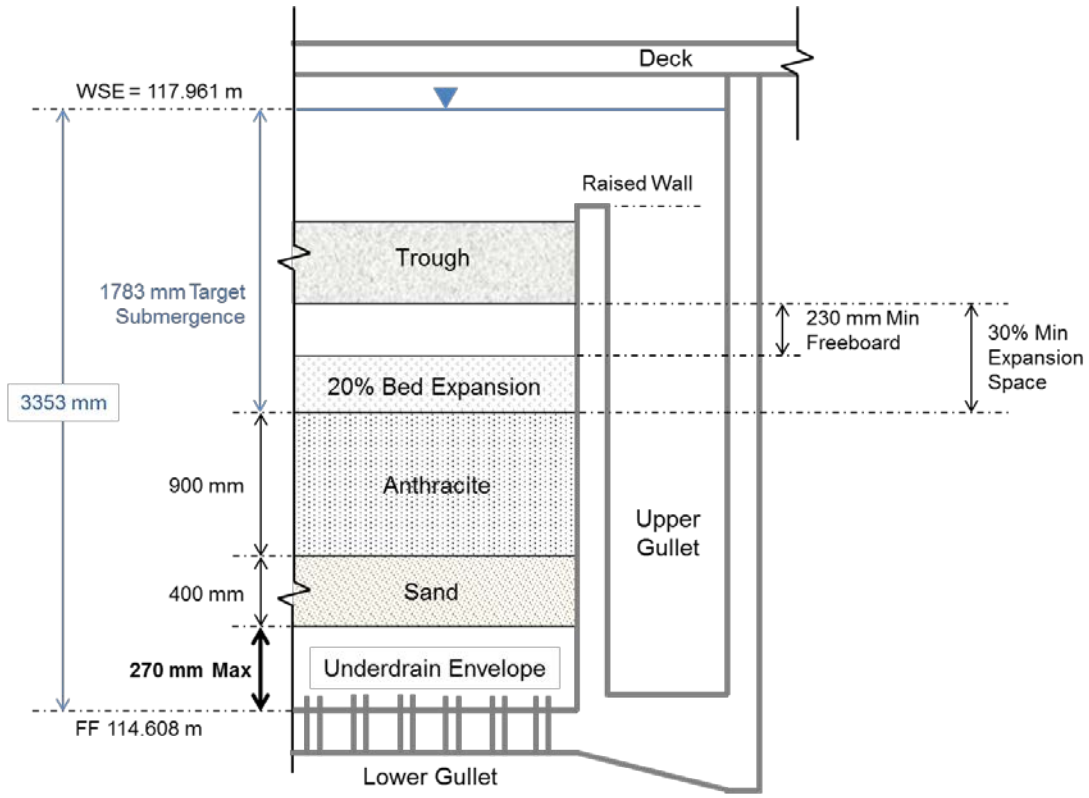

Figure 1 – Basis for Geometric Constraints and Vertical Profile.

The analysis consisted of two parts:

- **Submergence.** A minimum submergence was defined based on the desire to achieve filter runs to a terminal headloss of at least 2.5 m. An analysis was done to determine the submergence required to achieve this without leading to negative pressure within the filter bed, as shown in **Appendix A**. The 270 mm maximum envelope for the underdrain was determined to be a reasonable choice so that negative pressure is prevented under conservative conditions: even if 80% of the headloss accumulation takes place in the top 100 mm of the filter coal, the submergence of 1783 mm was sufficient across the range of filtration rates. The critical condition is for a low filtration rated adopted as 5m/hr

- **Vertical Placement of Components.** Given the underdrain envelope based on the required submergence, vertical profiles were developed as shown in **Appendix B.** For these profiles, the preferred media arrangement (see Tech Memo 1) and the existing features of the filter boxes were used, and backwash troughs were placed to meet two criteria for expansion and freeboard. A minimum of 230 mm freeboard above the expanded bed was required, along with a minimum of 30% total bed expansion height. This represents the minimum level of the underside of the backwash troughs. The upper level of the backwash troughs is as required to allow for filter inflow to be distributed via the troughs. The alternative filter profiles of Appendix B are based on:

    - **Alternative 1**: Limiting underdrain height to 270mm max. This allows for both stainless steel and HDPE underdrain options

    - **Alternative 2**: Limiting underdrain height to 150mm max. This allows for only the stainless steel underdrain options

A key constraint on the underdrain system follows from this analysis: namely, it must fit within a vertical envelope up to 270 mm. This would allow the desired media depth and terminal headloss to be achieved. This affects the choice of appropriate underdrain products. It also excludes the use of support media, which would require at least three layers approximately 100 mm each for a robust installation.

In addition to the vertical profile limitation, another key constraint on the underdrain system is the nominated 0.65 mm sand media. The underdrain openings must be appropriately sized for this sand.

3. UNDERDRAIN SYSTEM AND MATERIAL OPTIONS

3.1 OVERVIEW

The design and rehabilitation of granular media filters now commonly uses integrated underdrain systems. There are a variety of underdrain system products on the market today, as summarized in **Table 1** and described in more detail below. Even though any given underdrain system is a proprietary product designed and fabricated by a single supplier, the presence of multiple suppliers in the market makes it possible for underdrain systems to be competitively procured.

Table 1 – Summary of Underdrain System Alternatives.

SYSTEM TYPE	UNDERDRAIN SYSTEM SUPPLIER						
	Aqseptence	AWI	De Nora	Ovivo	Roberts	WesTech	Xylem
Stainless Steel							
Perforated		X		X			
Welded Wire	X						
Plastic							
HDPE Block			X		X	X	X
PVC Block					X		
Low Profile			X		X		X

The systems considered here consist of laterals which cover the filter floor to distribute flow during backwash and collect flow during filtration. The major categories of lateral-based underdrain systems include stainless steel and plastic (HDPE or PVC), as described in further detail in the sections below.

There are other underdrain systems on the market that are not considered here. These include concrete block underdrains (as provided by De Nora), which are more applicable to tertiary wastewater filtration; as well as nozzle underdrain systems. The materials for nozzle-style underdrains can be furnished by an underdrain system supplier such as Infilco-Degremont, Orthos, or Ovivo, but installation of these systems requires significant cast-in-place concrete work and field assembly. These nozzle-style systems are unlike the proprietary lateral-style systems in this regard.

3.2 STAINLESS STEEL UNDERDRAIN SYSTEMS

Some lateral-style underdrain systems are fabricated from stainless steel. These include triangular-shaped laterals formed from perforated stainless steel sheets; and semicircular laterals made from induction-welded stainless steel wire. These laterals are generally attached directly to the filter box floor with anchor rods. Suppliers of stainless steel underdrain systems include:

- **Aqseptence Triton System,** a screen-style underdrain product that consists of a grid of induction-welded Type 304 or Type 316 stainless steel wire (**Figure 2**).

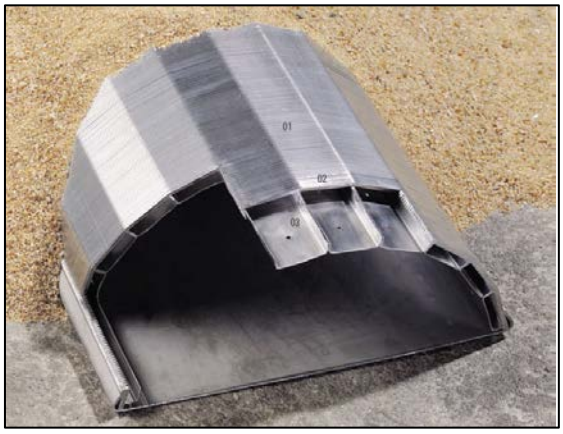

Figure 2 – Aqseptence Triton® stainless steel welded-wire underdrain system.

- **Anthratech Western Inc. (AWI) Phoenix System,** a perforated underdrain product fabricated from Type 316 stainless steel (**Figure 3**).

Figure 3 – AWI Phoenix® stainless steel perforated underdrain system.

- **Ovivo Stainless Underdrain System,** a perforated underdrain product fabricated from Type 304 stainless steel (**Figure 4**).

Figure 4 – Ovivo stainless steel perforated underdrain system.

3.3 PLASTIC UNDERDRAIN SYSTEMS

Plastic is the other major material option for lateral-style underdrain systems. These underdrain systems are made up from plastic blocks, which come in various sizes and material configurations. They are typically adhered to the filter floor with grout, and they be attached with anchor rods as well. There are a variety of brands of plastic underdrains:

- **De Nora – Tetra.** Tetra brand underdrains include the standard-height U-Block and the low-profile LP-Block (**Figure 5**), both of which are made from high-density polyethylene (HDPE).

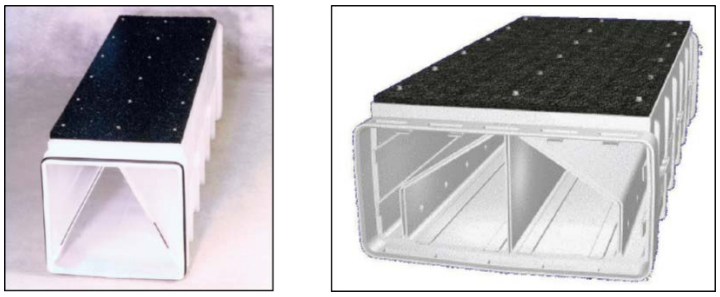

Figure 5 – Tetra U-Block® (left) and LP-Block® (right) underdrain systems.

- **Roberts.** Roberts brand underdrains (**Figure 6**) include Trilateral system, a standard-height HDPE block, and the Infinity system, a low-profile poly-vinyl chloride (PVC) block.

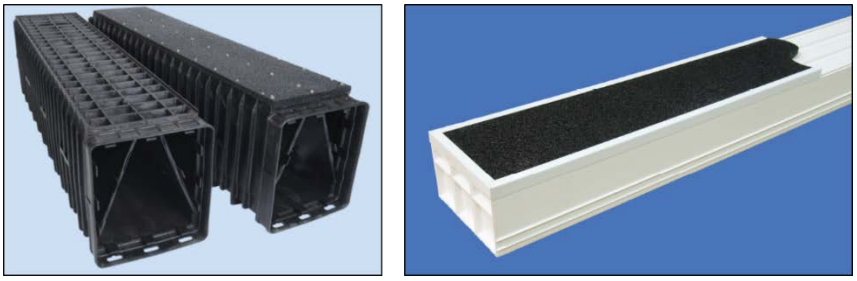

Figure 6 – Roberts Trilateral® (left) and Infinity® (right) underdrain systems.

- **WesTech.** WesTech furnishes the MultiBlock standard-height HDPE block (**Figure 7**).

Figure 7 – WesTech MultiBlock® underdrain system.

- **Xylem – Leopold.** The Leopold line includes the Type S standard-height and low-profile blocks, along with the newer Type XA low-profile block (**Figure 8**). These systems are all HDPE.

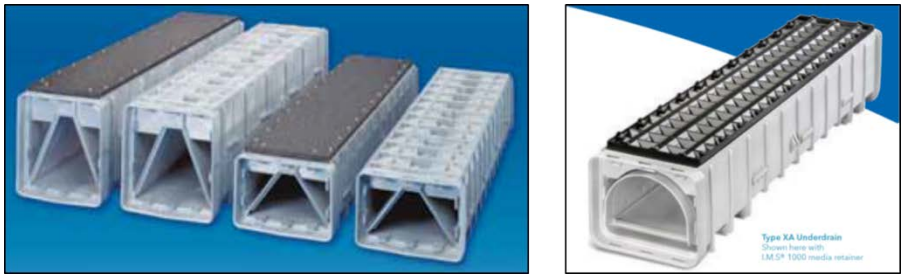

Figure 8 – Leopold Type S® (left) and Type XA® (right) underdrain systems.

3.4 MATERIAL QUALITY CONSIDERATIONS

For metal underdrain systems, stainless steel is generally selected for corrosion resistance. Nevertheless, corrosion of stainless steel underdrains may still occur (**Figure 9**). One common reason for this relates to field installation: even though the underdrain blocks themselves may be properly shop-treated by pickling and passivation, field-installed hardware and field welds are harder to treat and often subject to corrosion. A specification for a stainless steel underdrain system should require the underdrain supplier to furnish all installation hardware, field welding only on approval of the Superintendent, and supervise installation to ensure proper handling and installation. Another reason for corrosion is the use of lower-quality alloys. Type 316 stainless steel is considered the minimum appropriate stainless steel grade for long-term use in water and should be specified for a stainless steel underdrain system.

Figure 9 – Corrosion of stainless steel underdrains.

Plastic underdrain systems generally have excellent corrosion resistance because they are chemically inert in the water treatment plant environment. However, between the two types of plastic used in underdrain blocks, HDPE is the more durable material and appears in practice to retain its strength over time, whereas PVC may become brittle after many years in service. HDPE is preferred when specifying a plastic underdrain system and recommended for this project. HDPE is subject to thermal expansion, and the underdrain suppliers will be required to:

- Demonstrate how the system resists or accounts for any thermal effects
- Provide methods to mitigate thermal effects during installation and during any subsequent maintenance activities, e.g. providing insulating boards that attach to each block before media is placed.

4. MEDIA SUPPORT SYSTEM OPTIONS

4.1 OVERVIEW

The design of any underdrain must consider support of the layers of filter media, to prevent media from leaking out of the filter and into the lower gullet. Depending on media selection and underdrain opening size, it may be necessary to provide a media retention interface between the underdrain and the media. Any underdrain system considered here could be used with support media or with a media retaining system (MRS), as summarized in **Table 2**. Media retaining systems may be slotted or sintered, as described in more detail below.

Table 2 – Summary of Media Support System Alternatives.

ALTERNATIVE	UNDERDRAIN SYSTEM SUPPLIER						
	Aqseptence	AWI	De Nora	Ovivo	Roberts	WesTech	Xylem
Support Media	X	X	X	X	X	X	X
Slotted MRS	X	X		X	X	X	X
Sintered MRS			X		X	X	

The conventional method of supporting filter media employs support media (graded gravel and coarse sand or garnet) between the underdrain openings and the filter media. The slotted or sintered MRS are more recent alternatives, which can eliminate support media and thereby increase the vertical space available for filter media or freeboard. Given both the desired depth of new media in the East Bank WTP filters and the limited height in the existing filter boxes, support media is not acceptable for this project. This is based on the limited available envelope for the underdrain, as discussed Section 1 and in **Appendices A-B**. Using an MRS would increase the available vertical profile and help prevent media loss.

4.2 SLOTTED MEDIA RETAINING SYSTEMS

One way of preventing media from escaping into the underdrain is for water to exit the underdrain through small slots or perforations, which are too small for the media grains to pass through. In stainless steel systems, these slots or perforations are integral to the underdrain lateral itself; in plastic systems, a slotted plate is attached to the top of the underdrain blocks. Typical slotted products are shown in **Figure 10**.

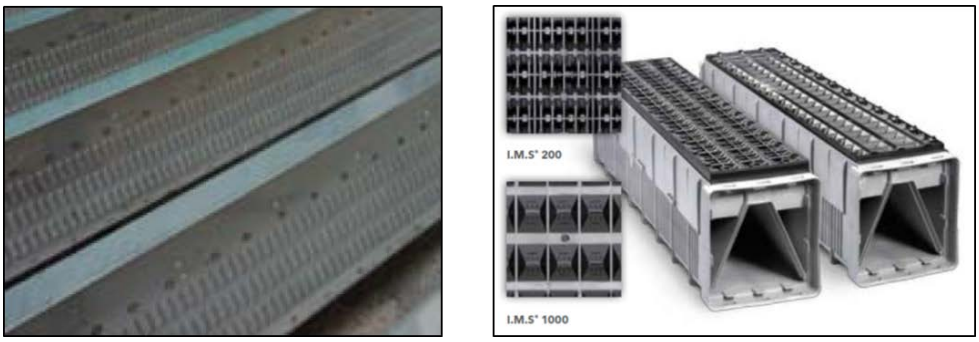

Figure 10 – Slotted media retaining systems in stainless steel and plastic.

The slots must be sized appropriately for the finest filter media that is to be used, and there is some flexibility in their sizing. Typically, the slots should be about half the effective size of the media or smaller, and 0.2 mm to 0.3 mm slots are standard for drinking water filters. The 0.65 mm sand media proposed in the design would work well with a slotted MRS that had 0.2-0.3 mm slots based on underdrain suppliers' experience.

4.3 SINTERED BEAD MEDIA RETAINING SYSTEMS

Another way to retain media is with a plate made from small plastic beads, which are sintered together to form a layer that is permeable to water but that does not allow media grains to enter. This style of plate is more or less exclusively used with plastic underdrain systems, and they are attached to the top of the blocks. A typical sintered bead MRS is shown in **Figure 11**.

Figure 11 – Sintered media retaining system.

Typically these plates are between 2 and 3 cm thick, and the beads are sized such that small enough openings are formed to retain filter media down to 0.45 mm effective size. A sintered bead MRS could be selected that would be well suited to the 0.65 mm sand to be used in this project. Air flow testing is

recommended for quality control of sintered MRSs to ensure consistent opening size distribution, and would be required in a specification.

4.4 CLOGGING PREVENTION FOR MEDIA RETAINING SYSTEMS

Biological fouling or physiochemical clogging must be prevented for MRSs. Seqwater has experienced clogging of 0.2 mm nozzle slots in the past, which appears to have been caused by fine slivers of media and made worse by the limited total slot area provided by nozzle systems. One method to mitigate this problem in the current design is to use coarser and more uniform sand that meets stronger requirements for gradation and shape. The larger total slot area for MRSs compared to nozzles also helps to reduce clogging. Finally, it is recommended to install pressure transmitters to trend backwash pressure over time and identify when clogging has occurred, after which a chlorinated or low-pH backwash could be used to clean the slotted or sintered MRSs. If monitored appropriately, either option can be suitable for long term performance.

5. UNDERDRAIN PERFORMANCE REQUIREMENTS

5.1 BACKWASH FLOW DISTRIBUTION

One of the most fundamental purposes of the underdrain is to achieve uniform distribution of backwash flow throughout the filter. This ensures that all of the filter media will fluidise during backwash, and prevents mud-balls from forming where media does not effectively fluidise.

The laterals in underdrain systems represent different ways of solving the problem of pressure recovery, as velocity head is converted to pressure head when water exits a lateral and variations in pressure head then drive variations in flow. Each underdrain system considered here has some form of parallel channel along the length of each lateral to compensate for pressure recovery and produce relatively uniform flow coming out of the lateral and into the filter. In addition, for laterals that are triangular or semi-circular with space in between, the underdrain design must avoid allowing areas of low local velocity to form in between laterals. This would lead to areas at the bottom of the filter bed that do not fluidise (**Figure 12**).

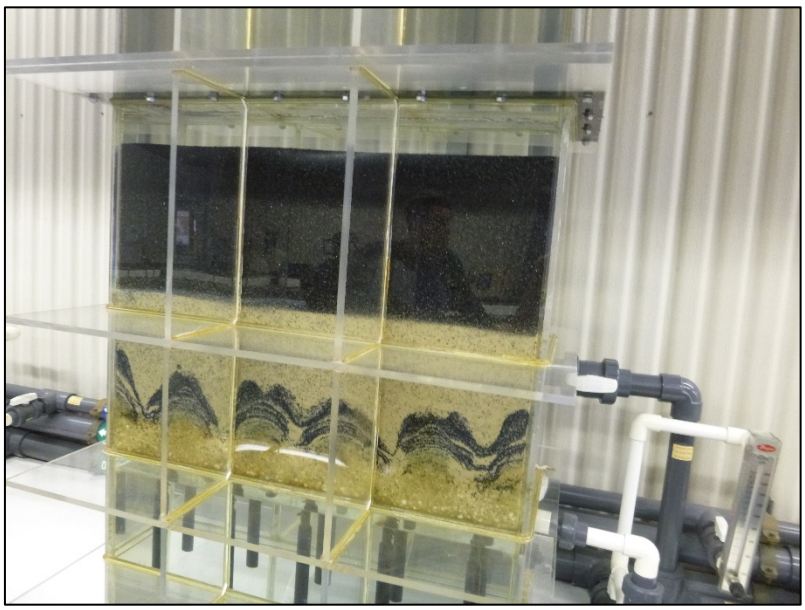

Figure 12 – Uneven fluidisation due to low local velocity in a pilot-scale system.

In addition to distribution *along* a lateral, distribution *among* the laterals must also be considered. The specification should require the underdrain suppliers responsible to design a system of orifices that controls flow into each lateral from the lower gullet, and they generally employ computational fluid dynamics (CFD) modelling to achieve this.

The tender for underdrain procurement must include a performance requirement for flow distribution during backwash. Recommended design practice is to require uniform flow to within ±5% across the entire filter box, to be validated by manometer testing during installation. The underdrain supplier will be required to use CFD modelling to confirm flow distribution along and among laterals, and to prevent low localised velocities.

5.2 UPLIFT STRENGTH

The underdrain system is also required to provide sufficient strength against uplift failure. Uplift failure of an underdrain may be either an "acute" or "chronic" condition. In an acute case, a failure of the backwash system may lead to a hydraulic surge or an air embolism that generates a sudden large force on the underdrain system. If the strength is insufficient, the underdrain may fail (**Figure 13**), after which the filter is inoperable without significant repair. In a chronic case, clogging of the underdrain or MRP may lead to backwash pressure that rises over time, eventually reaching a point where the net uplift force on the underdrain exceeds its strength.

Figure 13 – Damage to a filter due to underdrain failure after a hydraulic surge.

To prevent acute failure cases, some underdrain systems can be furnished with supplemental hold-down to provide a maximum uplift strength. Systems may include anchor rods sized for a given uplift pressure or pockets keyed into the grout, as summarized in **Table 3.** Generally, uplift strength can be specified up to 200 kPa, and such a requirement may be appropriate for the Mt Crosby East Bank WTP as the backwash supply is fed from an elevated tank and hydraulic surges could occur. Achieving the design strength also requires proper installation of the underdrain. In practice, improper adhesion of anchor rods or improper placement of grout may lead the underdrain to be significantly weaker than its design strength, and field quality control by the underdrain supplier is therefore considered mandatory.

Table 3 – Supplemental hold-downs for each underdrain system.

Supplier	System	Supplemental Hold-Down
Aqseptence	Triton	Anchor rods in side lugs, sized for uplift force
AWI	Phoenix	Anchor rods in side lugs, sized for uplift force
De Nora	Tetra U-Block	(Not available)
De Nora	Tetra LP-Block	Anchor rods integral to block, sized for uplift force
Ovivo	SST System	Anchor rods in side lugs, sized for uplift force
Roberts	Trilateral	(Not available)
Roberts	Infinity	Anchor rods between laterals, sized for uplift force
WesTech	MultiBlock	(Not available)
Xylem	Leopold Type S	(Not available)
Xylem	Leopold Type XA	Grout pockets integral to block, keyed into grout

For chronic underdrain failure, the best mitigation strategy is to monitor backwash pressure and trend it over time. This is the Stantec design practice and will be part of the filter rehabilitation design for this project. Lack of pressure transmitters to make backwash pressure visible to plant operators has been a common feature in underdrain failure cases caused by the build-up of clogging over time.

6. UNDERDRAIN GEOMETRY REQUIREMENTS

6.1 INTEGRATION WITH FILTER MANIFOLD AND AIR SYSTEM

The underdrain system must include some means to supply both washwater and scour air to the laterals from the lower gullet and the air header, respectively. The different underdrain systems generally achieve this in different ways, and the underdrain supplier will be responsible to customise their system for the existing conditions at the East Bank WTP. Examples are shown in **Figure 14** and **Figure 15**.

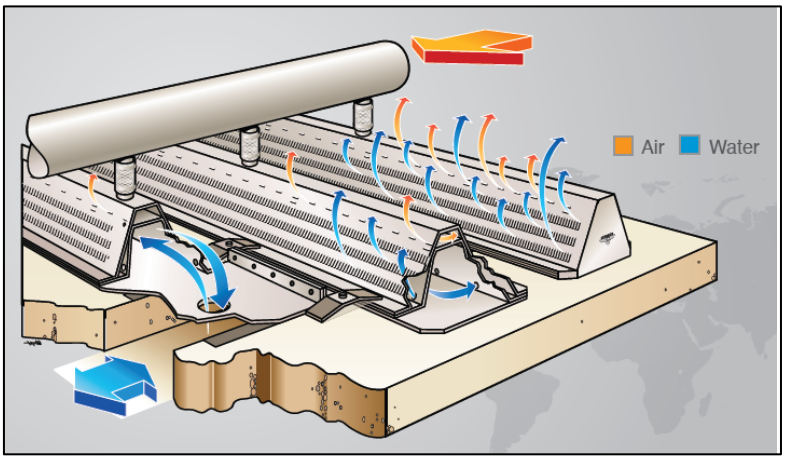

Figure 14 – Air and water supply to laterals spanning an open flume.

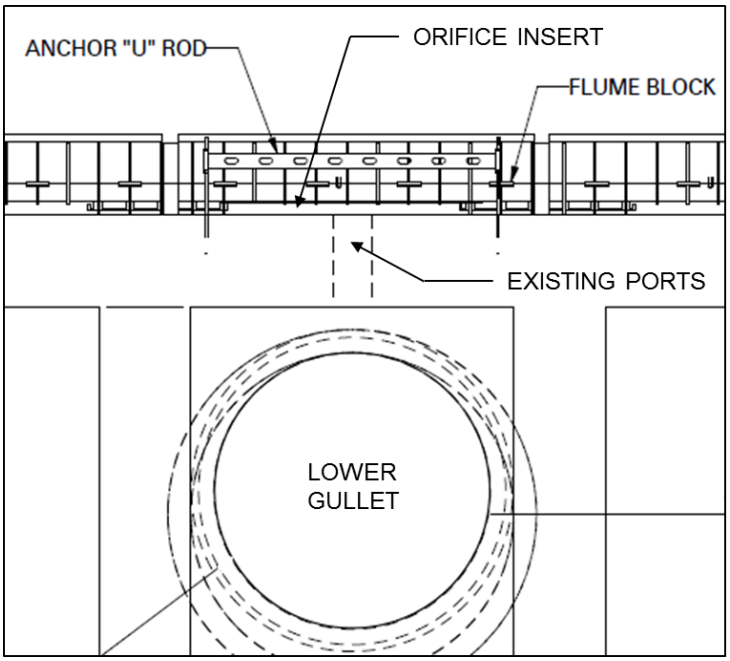

Figure 15 – Orifices on flume blocks to create a secondary channel over existing ports.

The existence of existing ports in the existing filters from the lower gullet through the filter floor creates a challenge for the underdrain suppliers. Some suppliers may prefer a system that places a new plate and new penetrations on different spacing over the lower gullet, which would require demolition of some or all of the existing concrete. The ability to remove the concrete floor over the lower gullet is still subject to structural assessment. Other suppliers may be able to use orifice inserts and open-bottomed flume blocks to create a "secondary channel" along the length of the gullet, so that flow could be distributed among the laterals even if their spacing does not match the spacing of the existing ports. This would require hydraulic design of the orifices.

There is also the challenge of integrating a new air scour system. Some underdrain suppliers will recommend an air header along the length of the filter with drop pipes to each lateral, as shown in **Figure 13.** Others may be able to feed air directly into the lower gullet with two-phase air/water flow directly into the laterals from here. For the specification, it is recommended to define a termination point of the new air supply piping, beyond which the design of the routing and connection to the underdrains would be the supplier's responsibility.

6.2 VERTICAL PROFILE

Different underdrain systems have different vertical space requirements. Higher underdrain blocks have greater area for flow to reduce velocities, which makes the hydraulic design less critical. However, these higher underdrain blocks reduce the space available for media and freeboard. Some suppliers (**Table 4**) therefore offer "low-profile" systems that meet the hydraulic performance requirements in a shorter underdrain block, so that more space is available in the filter box. These low-profile underdrains vary in height up to about 270 mm.

Table 4 – Low profile options for each underdrain system.

Supplier	System	Low-Profile Option?
Aqseptence	Triton	Standard
AWI	Phoenix	Standard
De Nora	Tetra U-Block	(Not available)
De Nora	Tetra LP-Block	Standard
Ovivo	SST System	Standard
Roberts	Trilateral	(Not available)
Roberts	Infinity	Standard
WesTech	MultiBlock	(Not available)
Xylem	Leopold Type S	Available Option
Xylem	Leopold Type XA	Standard

It is recommended that a low profile system be specified for this application. This would meet the design limitation of 270mm available depth for the underdrain for additional media depth to improve filtration performance, as well as additional media freeboard. The elevation calculations in **Appendix A** show that a low-profile system, in conjunction with eliminating support media, makes it possible to meet the media freeboard goals.

7. UNDERDRAIN SUPPLIER REQUIREMENTS

Beyond the technical requirements of the underdrain system, there are several requirements that may be relevant for a suitable underdrain supplier:

- **Relevant experience.** The underdrain supplier should have a track record of installations at large water treatment plants and large filter floor areas, with some experience in Australia. This would ensure that their production capabilities and design expertise are sufficient, and understanding of Australian standard requirements.

- **Local capacity.** The underdrain supplier should have an office and staff, either in Australia or available to travel to Australia, to support installation. The services provided by the underdrain supplier during installation are very important to prevent issues discussed above, such as improper handling and installation of the underdrains.

The degree to which the various underdrain suppliers could meet these requirements is summarised in **Table 5.**

Table 5 –Underdrain system supplier capabilities.

Supplier	Relevant Experience?	Australia Presence?
Aqseptence	Yes	Local facility – manufacturing, sales, service

AWI	Yes	Staff would be provided during installation
De Nora	Yes	Local representative for sales, service
Ovivo	Yes	Local facility – sales, service
Roberts	Unknown	Unknown
WesTech	Unknown	Unknown
Xylem	Yes	Local facility – sales, service

8. CONCLUSIONS

From the evaluation of underdrain system options for the Mt Crosby East Bank WTP, it is concluded that:

- A competitive tender process is possible, to include stainless steel underdrain systems, plastic underdrain systems. It is recommended that the specification require Type 316 stainless steel in the former category, and HDPE plastic in the latter category, to ensure a quality product. This provision would exclude the Ovivo Type 304 stainless steel system and the Roberts Infinity PVC block system. The specification for a stainless steel system must also include requirements on the supplier to prevent issues with installation hardware and field welds. The specification for an HDPE system must stipulate methods to prevent issues with thermal expansion.
- Support media cannot be accommodated in this application due to geometric limitations of the filter cells. Media retention will be dependent on either the underdrain slots/perforations or the equivalent provision provided by either a slotted MRS or sintered-bead MRS. Based on the selected sand media (E_s 0.65), the opening size would be selected to match the media design, in this case of the order of 0.3mm.
- The media quality requirements, increased opening area for lateral underdrains (compared to nozzles), and the installation of backwash pressure sensors will all mitigate issues with clogging.
- The specification should require flow uniformity to within ±5% across the area of the filter, to be verified by manometer testing during installation. This will require CFD modelling on the part of the underdrain supplier.
- It is recommended that the specification require a supplemental hold-down system to meet a minimum uplift strength. This provision would exclude several plastic systems including the De Nora Tetra U-Block, the Roberts Trilateral block, the WesTech MultiBlock, and the Xylem Leopold Type S block. The specific strength target can be selected based on an analysis of possible failure cases in the backwash system.
- The underdrain suppliers have different ways of integrating their system with the supply of washwater and scour air. Each supplier will have to customise their system for the East Bank WTP, and it appears that several of the suppliers have practical ways to do so.
- A low-profile underdrain product should be specified to conform to the available vertical space in the filter boxes. This provision would exclude standard-height plastic blocks including the De Nora Tetra U-Block, the Roberts Trilateral block, and the WesTech MultiBlock, and the Xylem Leopold Type S block.
- The specification should require the underdrain supplier to have relevant experience and local capacity to play the important role of supporting installation. Several of the key suppliers have local facilities or local representatives.
- A tender meeting all of the above criteria would allow for competition among four possible systems.
    - Two stainless steel underdrains – the AWI Phoenix system and the Aqseptence Triton system
    - Two HDPE underdrains – the De Nora Tetra LP block system and the Xylem Leopold Type XA system.
- Invited tenders from the above four suppliers would provide cross competition with 2 suppliers for each material option to test the comparison of the same material. Seqwater would not be beholden to only one tender of a selected material, should there be some impediment to selecting one of the material options

Appendix A
Terminal Headloss Profile

Seqwater - Mt Crosby East Bank Filter Upgrades
Pressure Profile and Terminal Headloss

Design Condition: **Low Rate 5m/hr**

Elevations

Water Surface	117.961	m AMSL
Submergence	1.783	m
Top of Anthracite	116.178	m AMSL
Top of Sand	115.278	m AMSL
Underdrain	114.878	m AMSL

Operating Condition

Filtration Rate	5	m/hr	
Terminal Headloss	2.5	m	Excluding losses in underdrain and effluent piping
Percent in Sand	20	%	

Media

	Thickness (mm)	*Media ES (mm)*	*$HL_{CleanBed}$ (m)*	*Solids Entrainment Zone (mm)*
Anthracite Layer	900	1.5	0.054	100
Sand Layer	400	0.65	0.165	75

Pressure Profile

LAYER	HEAD (m) Elevation	HEAD (m) Pressure	LENGTH THRU LAYER (mm)	HEADLOSS (m) Clean-bed	HEADLOSS (m) Accumulation
Water Column	117.961	0.000			
	117.000	0.961			
Anthracite	116.178	1.783	100.00	0.006	1.825
	116.078	0.052	400.00	0.024	
	115.678	0.428	400.00	0.024	
	115.278	0.804			
Sand	115.278	0.804	75.00	0.031	0.456
	115.203	0.392	162.50	0.067	
	115.041	0.487	162.50	0.067	
	114.878	0.583			
TOTAL				**0.219**	**2.281**

Appendix B
Filter Profile Options

Stantec

Seqwater - Mt. Crosby East Bank Filter Upgrades

Filter Elevation Tabulation

Abbreviations

BOD	Bottom of Deck	TOEW	Top of Existing Gullet Wall
BOT	Bottom of Trough	TOM	Top of media
MF	Media Freeboard	TORW	Top of Raised Wall
MRP	Media Retention Plate	TOT	Top of Trough
TOD	Top of Deck	TOW	Top of Weir/Gullet Wall
TOEM	Top of Expanded Media	WSE	Water Surface Elevation

Media Properties		*Existing*	*Prelim*	*Alternative*
Anthracite ES	mm		1.20	1.50
Sand ES	mm	0.95	0.65	0.65
Bed Expansion	%	26%	20%	20%

Assumptions

Media Freeboard (MF) is defined as the distance between the expanded media and the bottom of the trough.
Elevations based on record drawings provided by Seqwater.
The deck is filter deck is 300 mm thick.
Assume the top of the troughs will be 150 mm below the top of the gullet wall.
The goal between TOM and BOT is to enable 30% media expansion without hitting the bottom of the trough.
The HDPE underdrain option, including the media retention plate (MRP), is less than 270mm

Summary of Components

Component	Existing	Preliminary Design	Alternative 1	Alternative 2
Backwash Troughs	750 mm deep	650 mm deep, raised	650 mm deep, raised	650 mm deep, raised
Gullet Wall	Elev = 116.793 m	Raised 525 mm	Raised 675 mm	Raised 555 mm
Anthracite Media Layer	None	660 mm thick	900 mm thick	900 mm thick
Sand Media Layer	600 mm thick	600 mm thick	400 mm thick	400 mm thick
Gravel / Support Layers	509 mm thick	350 mm over drains	None	None
Underdrain	Pipe system	Stainless steel teepee	Max height envelope	Min possible height

Elevation Table

	Seqwater Design				Media Options			
	Existing		Preliminary Design		Alternative 1		Alternative 2	
Component	Value (mm)	Elevation (m)	Value (mm)	Elevation (m)	Value (mm)	Elevation (m)	Value (mm)	Elevation (m)
Deck and Gullet Wall								
Top of Deck		118.342		118.342		118.342		118.342
Deck Thickness	305		305		305		305	
Bottom of Deck		118.037		118.037		118.037		118.037
Top of Existing Gullet Wall		116.793		116.793		116.793		116.793
TORW		116.793		**117.293**		**117.445**		**117.325**
Water Surface Elevation		117.961		117.961		117.961		117.961
Dist from Top of Wall to BOD	1244		744		592		712	
Dist from TOT to BOD	1396		896		744		864	
Troughs and Freeboard								
Dist from Top of Wall to TOT	152		152		152		152	
Dist from WSE to TOT	1320		820		668		788	
Dist from Floor to TOT	2033		2533		2685		2565	
TOT		116.641		**117.141**		**117.293**		**117.173**
Trough Depth	750		625		625		625	
Raise Trough / Gullet Wall			500		652		532	
BOT		115.891		116.516		116.668		116.548
TOM to BOT	174		198		490		490	
% Exp Space (30% goal)	29%		16%		38%		38%	
TOM		115.717		116.318		116.178		116.058
BOT		115.891		116.516		116.668		116.548
TOEM to BOT (230 mm goal)	18.0		-54.0		230.0		230.0	
TOEM		115.873		116.570		116.438		116.318
Media and Underdrain								
Media Submergence	2244		1643		1783		1903	
Anthractite	0	115.717	660	116.318	900	116.178	900	116.058
Sand	600	115.717	600	115.658	400	115.278	400	115.158
Gravel / Support Layers	509	115.117	300	115.058	0	114.878	0	114.758
Underdrain		114.608	150	114.758	270	114.878	150	114.758
Filter Floor		114.608		114.608		114.608		114.608
L/d Ratio, Anthracite			550		600		600	
L/d Ratio, Sand	632		923		615		615	
L/d Ratio, Total	632		1473		1215		1215	

Technical Memo

Project:	**Mt Crosby East Bank WTP Filter Refurbishment**	*Project Code:*	83504178
Date:	19 December 2017	*Memo No.:*	4
To:	Bart Vervetjes, Seqwater		
From:	Steve Moore		
Subject:	**Filter Design Summary**		

Rev. No.	Date	Description	Prepared By	Checked By	Reviewed By	Approved By
1		Draft for Client	CP	MA	JB	SM

1. INTRODUCTION

Stantec has been engaged by Seqwater to provide engineering design services for the filter refurbishment works at the Mt Crosby East Bank WTP. This technical memorandum provides commentary on the overall design of the filters for the WTP taking into consideration the assessment and conclusions provided in Technical Memo Nos.1, 2 and 3.

Stantec is providing comment and advice with respect to the media design provided by Seqwater, Stantec has not been requested to undertake a full design, nor take the current design through a full design review. Stantec does not accept liability for the final design which will be the sole responsibility of the Client.

2. DESIGN CAPACITY

The required performance of the filters is defined in various sections – Project Success Factors, Design Basis and Criteria and Concept Design Targets of the Scope of Works. A range of project success factors and design requirements for the filters are included in the Detailed Design Scope of Works. These are summarized in the sub-sections below.

PROJECT SUCCESS FACTORS

Detailed Design Scope of Works Table 1-1 - Project Success Factors:

- 200ML/day with raw water 1000NTU
- 3.5log reduction across the filters for cryptosporidium measured as individual filter turbidity maxima of 0.2NTU and 95%ile of <0.1NTU at maximum load rate of 12m/hr and maximum settled water turbidity of 2NTU (ie at the 500ML/day sustainable filtered water flow rate)
- Filter backwashing requires approximately 50% lower volume compared to current requirements
- Filter backwashing occurs a maximum of once per 24hours with inlet turbidity of 2NTU (ie filter run time>23hrs at the 500ML/day sustainable filtered water flow rate)

DESIGN BASIS AND CRITERIA

Detailed Design Scope of Works Table 2-1 - Design Flow:

- Maximum 650ML/day with 20 filters in operation
- Sustainable filtered water flow 500ML/day with 20 filters in operation, 2NTU settled water quality, filter run time >23hrs

Detailed Design Scope of Works Table 2-2 - Design Water Temperature:

- Summer 32deg C
- Winter 14deg C

Detailed Design Scope of Works Table 2-3 - Refurbished Filters Design Criteria:

- Filter run time >23 hrs
- Design filtration load rate <12m/hr

- Backwash media expansion >20% at 20deg C

Detailed Design Scope of Works Table 2-4 - Filter Media Design

- Filter coal - 660mm layer 1.2mmEffective Size, <1.35Uniformity Coefficient
- Sand - 600mm layer, 0.65mm Effective Size, <1.35Uniformity Coefficient
- L/d (filter coal and sand media) of 1200
- Sand and garnet support media layers
- Overall media depth 1460mm

APPENDIX A – DESIGN TARGETS

Additional design parameters are also included in the Appendix A to the Detailed Design Scope of Works. These are seen as either second order requirements or objectives or are details used for the development of the Seqwater conceptual design.

Detailed Design Scope of Works Table 14-8 – Filtration Unit Water Quality and Quantity Goal:

- Protozoa log reduction – 3.5
- Turbidity of settled water @ up to 650ML/day – 2NTU
- Turbidity of settled water @ up to 200MLday – 3NTU (poor raw water quality event, raw water 1000NTU)
- Maxima filtered water turbidity – 0.2NTU
- 95% treated water turbidity 0.1NTU
- Filter availability 23 hrs/day (96%)
- Production rate at medium process risk – 540ML/day (12m/hr filtration rate)
- Production rate at low process risk – 495Ml/day (11m/hr filtration rate)

Detailed Design Scope of Works Tables 14-9, 1410, 14-11, 14-12 Concept Design Parameters:

- Design filtration Load rate 12m/hr
- Overall media depth – 1460mm
- L/d (filter coal and sand media) – 1200
- Air scour rate – 50 to 60m/hr
- Low rate wash – 12 to 20m/hr
- High rate backwash 28-36 m/hr
- Bed expansion 20%
- Minimum launder height above expanded media – 200mm
- Launder grade - >1:1000
- Manufactured lateral floor depth – 150mm
- Nozzle slot width 1.0 to 1.2mm
- Lateral materials 316SS
- Number of launders per filter – 8
- Launder size - 500mm wide, 625mm deep

3. FILTER MEDIA

Stantec undertook a review of the filter media design in Technical Memorandum No. 1, mainly focused on its suitablility under backwash conditions.

The pilot plant assessment work undertaken by Hunter Water for Seqwater determined that:

- the ES 0.65mm filter sand is considered suitable
- the provision of a filter aid polymer and pre-chlorination was required to achieve the filtered water turbidity targets
- the pilot trials using:
    - 660mm of 1.3mm filter coal over 600mm of 0.65mm sand
    - 860mm of 1.3mm filter coal over 300mm 0.65mm sand

both achieved good filtered water quality

- the deeper layer of sand provides a slight improvement (reduction) in filtered water turbidity
- the deeper layer of filter coal increases the filter run time
- a filter with a L/d of 1200 is considered appropriate

The subsequent filter modelling work undertaken by Stantec confirmed the above outcomes, but also indicated that:

- a filter with a Uniformity Coefficient of 1.35 or lower is considered appropriate
- the ES 1.2mm filter coal proposed in the design criteria and the ES 1.3mm filter coal used in the pilot testing work were both considered sub-optimal. They are not well matched to the ES 0.65mm filter sand media and should be replaced with ES 1.5mm filter coal which will have similar expansion rates to the ES0.65mm sand during backwash. The larger size filter coal will also increase the filter run times during poor settled water quality events.
- the required filter run time of >23hrs for the sustainable filtered water flow condition of 500ML/day with a settled water quality of 2 NTU <u>cannot</u> be achieved under any filter configuration

A filter with a 900mm layer of 1.5mm ES filter coal over a 400mm layer of ES 0.65mm sand is considered to provide an appropriate balance to achieve the filtered water turbidity and filter run times. This provides a sand layer thickness in-between that which was used for the two best performing pilot testing configurations. At on overall bed depth of 1300mm it is marginally deeper than the 1260mm bed depths used for the pilot testing. The additional depth is required to maintain a L/d of at least 1200.

Filter modelling estimates that this media configuration can provide the following capacities:

- 500ML/day with 2NTU settled water and filter run time of 12.9hrs
- 310ML/day with 2NTU settled water and filter run time of 23hrs
- 545ML/day with 1NTU settled water and filter run time of 23hrs
- 215ML/day with 3NTU settled water and a filter run time of 23 hrs.

The filter model output for the 500ML/day at 2NTU condition is shown in Figure 1.

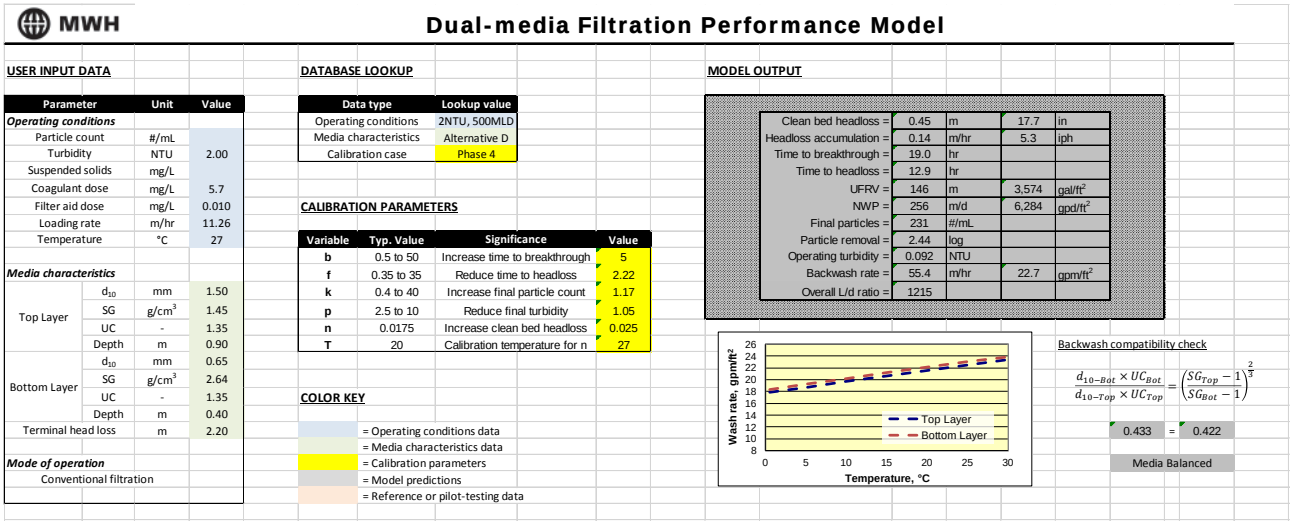

MWH

Dual-media Filtration Performance Model

USER INPUT DATA

Parameter		Unit	Value
Operating conditions			
Particle count		#/mL	
Turbidity		NTU	2.00
Suspended solids		mg/L	
Coagulant dose		mg/L	5.7
Filter aid dose		mg/L	0.010
Loading rate		m/hr	11.26
Temperature		°C	27
Media characteristics			
Top Layer	d_{10}	mm	1.50
	SG	g/cm^3	1.45
	UC	-	1.35
	Depth	m	0.90
Bottom Layer	d_{10}	mm	0.65
	SG	g/cm^3	2.64
	UC	-	1.35
	Depth	m	0.40
Terminal head loss		m	2.20
Mode of operation			
Conventional filtration			

DATABASE LOOKUP

Data type	Lookup value
Operating conditions	2NTU, 500MLD
Media characteristics	Alternative D
Calibration case	Phase 4

CALIBRATION PARAMETERS

Variable	Typ. Value	Significance	Value
b	0.5 to 50	Increase time to breakthrough	5
f	0.35 to 35	Reduce time to headloss	2.22
k	0.4 to 40	Increase final particle count	1.17
p	2.5 to 10	Reduce final turbidity	1.05
n	0.0175	Increase clean bed headloss	0.025
T	20	Calibration temperature for n	27

COLOR KEY

= Operating conditions data
= Media characteristics data
= Calibration parameters
= Model predictions
= Reference or pilot-testing data

MODEL OUTPUT

Clean bed headloss =	0.45	m	17.7	in
Headloss accumulation =	0.14	m/hr	5.3	iph
Time to breakthrough =	19.0	hr		
Time to headloss =	12.9	hr		
UFRV =	146	m	3,574	gal/ft^2
NWP =	256	m/d	6,284	gpd/ft^2
Final particles =	231	#/mL		
Particle removal =	2.44	log		
Operating turbidity =	0.092	NTU		
Backwash rate =	55.4	m/hr	22.7	gpm/ft^2
Overall L/d ratio =	1215			

Backwash compatibility check

$$\frac{d_{10-Bot} \times UC_{Bot}}{d_{10-Top} \times UC_{Top}} = \left(\frac{SG_{Top}-1}{SG_{Bot}-1}\right)^{\frac{2}{3}}$$

0.433 = 0.422

Media Balanced

Figure 1 – Filter model output for 500ML/day @ 2NTU

Conclusion –The dual media filter media comprised of 900mm layer of 1.5mm ES filter coal over a 400mm layer of ES 0.65mm sand with a UC of 1.35 is considered suitable to address the project performance objectives.

4. BACKWASHING

The requirements for backwashing of filters was discussed in Technical Memorandum Nos. 1 and 2.

For the recommended filter media above, the following performance observations are made based on the backwashing regime proposed by Seqwater:

- the proposed air scour rate of 50-60m/hr is considered suitable
- the proposed combined air water wash and low rate backwash rate of 12-20m/hr is considered suitable
- the design requirements for a minimum 20% filer bed expansion during high rate backwash is considered suitable
- the proposed high rate backwash between 28 and 36 m/hr is <u>not</u> sufficient to achieve the minimum required bed expansion of 20%

Using the Stantec filter design tool and the performance data provided by filter coal and filter sand suppliers shown in Figures 2 and 3 below, a high rate backwash ranging between 50 and 58 m/hr will be required based on the required water temperature design range of 14 to 32 degrees C to achieve the minimum 20% bed expansion.

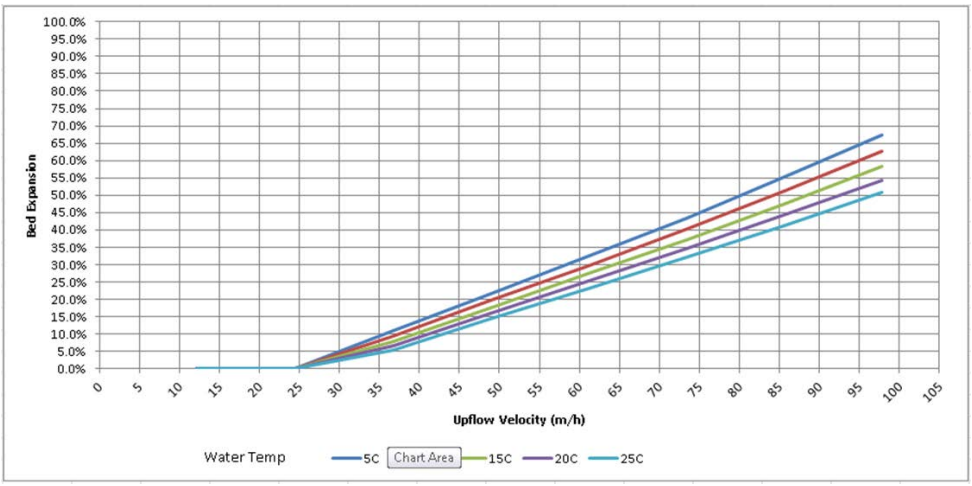

Figure 2 ES 0.65mm Filter Sand Bed Expansion Curves (data courtesy of River Sands Pty Ltd)

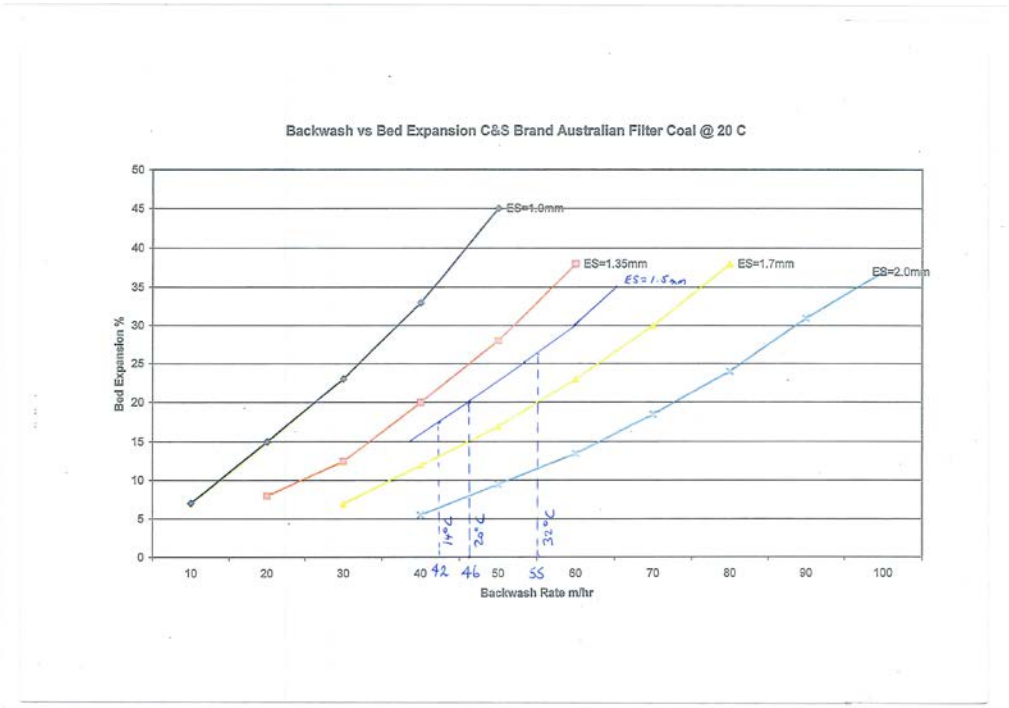

Figure 3 ES1.5mm Filter Coal Bed Expansion Curves (data courtesy of James Cumming and Sons Pty Ltd)

The concept design included 8 backwash collection launders in each filter. These launders were 500mm wide and 625mm deep. With the centre walkway arrangement in filters 1 to 12, an even number of launders is preferred so that there is not a launder directly under the walkway. For steel or FRP launders, a six or eight launder configuration is considered suitable. If launders are constructed in reinforced concrete

a six launder configuration would be preferred due to overall space constraints. The size of launder adopted in the concept design has been checked for the proposed increased backwash flow rates and is considered to be too small. A launder 525mm wide and 700mm deep is required for an eight launder configuration. A nominal grade of 1:1000 was proposed for the launders in the concept design. As the launders are submerged during normal operation there is no need for a grade. The launder design shall include sufficient internal freeboard to provide the necessary hydraulic grade for the design flow.

The expected volume of water required for a filter backwash cycle will be in the order of 530 m^3 based on 3 minutes at a low rate of 20m/hr and a 5 minute wash cycle at high rate of 55m/hr. This represents around 4.2 bed volumes. As this volume includes filling the filter cell back up to the launder level, the estimated volume of waste backwash water to be treated will be around 425m^3 per backwash, or 3.4 bed volumes.

The current volume of treated water used during a backwash is approximately 390m^3. The volume of waste backwash water being produced per backwash is therefore approximately 300m^3 after refilling of the filter cell following the surface wash. Assuming that the filter run times for the refurbished filters is double that of the existing filters, the overall reduction in waste backwash water volume will be around 30%, which is slightly less than the target set in the Project Success Factors of 50%.

Recommendation – The backwash cycle shall comprise an air scour rate of between 50 and 60 m/hr followed by a combined air scour with introduced low rate water wash at 12 to 20m/hr (operator adjustable) and finally a high rate wash at a rate between 50 and 58m/hr depending on the backwash water temperature.

Recommendation - Assuming steel or FRP material will be structurally suitable for the backwash launders (to be confirmed), eight backwash launders 525mm wide and 700mm deep shall be provided. The launders should have a minimum freeboard of 230mm from the expanded filter media during backwash and preferably greater to prevent media loss or localized mounding of the media between launders.

5. FILTER PROFILE AND UNDERDRAINAGE

The requirements for the overall filter profile are detailed in Technical Memorandum No. 3. The key criteria affecting the profile is the amount of submergence available over the filter media.

With a design terminal filter headloss of 2.5, a preferred depth of water over the media of 1.78m should be provided to ensure sufficient driving head is available and air binding does not occur in the media. This leaves around 270mm of space for the filter underdrainage as shown in the Figure 4 below.

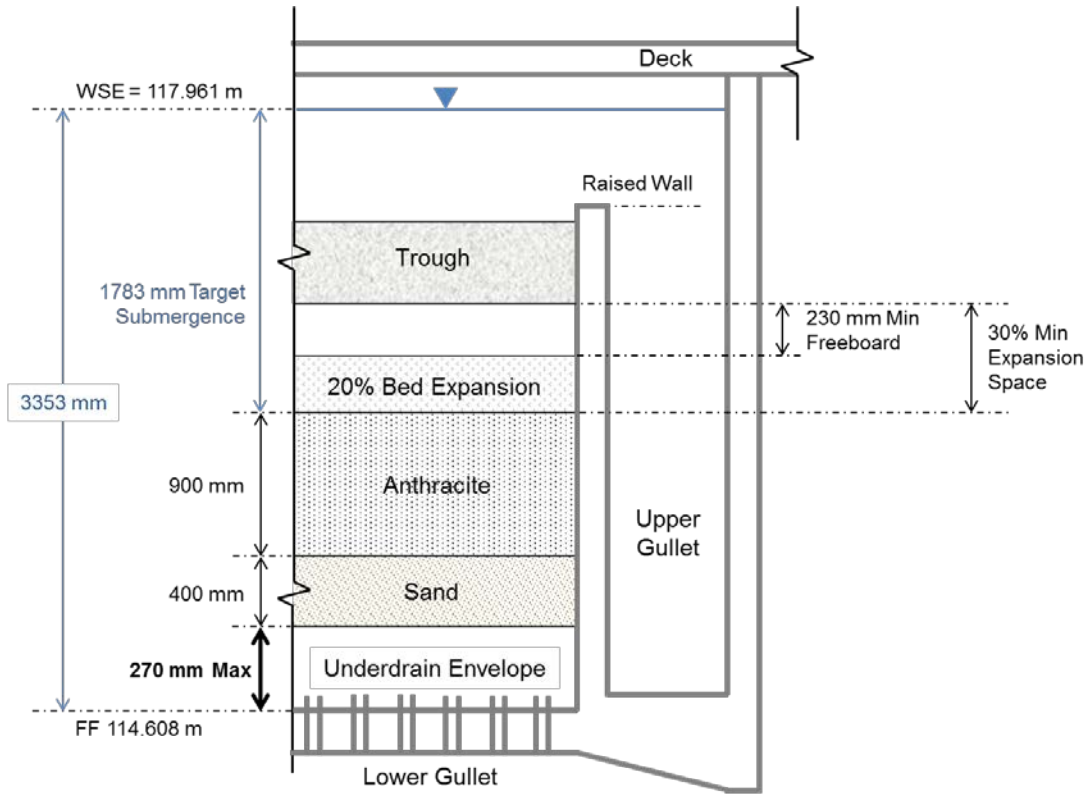

Figure 4 – Filter Design geometry

A range of proprietary lateral systems were identified together with an assessment of the effect on the filter profile. The main conclusions from this assessment were:

- a low profile underdrain lateral system in 316SS or HDPE with uplift prevention was preferred. Two preferred suppliers for each were identified.
- the design targets in Appendix A of the Detailed Design Scope of Works included a slot width of between 1 and 1.2mm for the filter laterals and a media support layer which will significantly increase the overall depth of the underdrainage envelope below the filter media. The available filter cell depth therefore precludes provision of a media support layer, and the underdrains will require slots or media retention plates to retain the filter sand
- a lateral slot width of 0.2 to 0.3mm is considered suitable for retaining the ES 0.65mm sand. This can be achieved using narrow slots in the underdrains or a media retention plate added to the top of the lateral. No media support layer is then required.
- an uplift prevention system should be provided.
- pressure monitoring of the backwash should be provided for the early detection of underdrain blockage from scaling or fouling.

Recommendation – The filter underdrainage system should comprise proprietary lateral system that is low profile, fabricated from 316SS or HDPE with uplift prevention, with an effective opening size between 0.2 and 0.3mm and no support media. The system should be fitted with a backwash pressure monitoring system.

6. OVERALL SUMMARY OF PROPOSED FILTER DESIGN

A filter design considered suitable for the Mt Crosby East Bank WTP is summarised in the following table.

Parameter	Unit	Data
Filter Cells		
Existing cell dimensions (base)	m	12.7 x 7.6

Filter area (1 cell)	m2	96.52
No of filter cells	No	20
Design Flow		
Design filtration load rate – maximum 650ML/day	m/hr	14.64
Design filtration load rate – sustainable flow 500Ml/day	m/hr	11.26
Estimated production capacity assuming minimum filter run time of 23hrs with settled water turbidity levels of: • 0.5NTU • 1NTU • 2NTU • 3NTU (Assumes water temperature of 27deg C)	ML/day	 >650 545 310 215
Filter Media		
L/d		1215
Upper Layer		900mm ES 1.5mm Filter Coal UC 1.35, SG 1.44
Lower Layer		400mm ES 0.65mm Sand UC 1.35, SG 2.64
Media support layer		Not Used
Filter Underdrains		
Type		Proprietary
Material		316SS or HDPE
Effective slot width	mm	0.2 – 0.3
Maximum overall depth		270mm
Backwashing		
Type		Concurrent air – water wash Temperature adjusted
Air scour rate	m/hr	50 - 60
Low rate water	m/hr	12 - 20
High rate water	m/hr L/sec	50 – 58 1340 - 1550
Minimum filer bed expansion during backwash	%	20
Maximum water temperature	deg C	32
Minimum water temperature	deg C	14
Launder Nos	No.	8 (assuming steel or FRP)
Launder Size	mm	525 wide 700 deep Semicircular base
Launder grade		Nil

7. COMPARISON AGAINST DETAILED DESIGN SCOPE OF WORKS

A comparison of the proposed filter design and profile against the various criteria listed in section 2 above is provided in the following table.

Item	Design Parameter	Detailed Design Scope Reference	Design requirement	Proposed design	Comment

1	Success Factor	Table 1-1 Appendix A Table 14-8	200ML/day with raw water 1000NTU, settled water 3NTU, filter backwash >23hours	Filter performance modelling indicates a flow of 215ML/day can be achieved with a filter run time of 23hrs for settled water turbidity of 3NTU	
2	Success Factor	Table 1-1	3.5 log reduction across filters measured as individual filter turbidity maxima 0.2NTU and 95%ile 0.1NTU under Sustainable filtered water flow of 500ML/day	Filter performance modelling indicates filtered water turbidity requirements can be met during filter operation	The 3.5 log reduction is an inferred outcome based on turbidity criteria, and no comment is made as to actual log reduction achieved
3	Success Factor	Table 1-1	Filter backwashing requires 50% lower volume compared to current requirements	Filter backwash estimated to use 530kL of upwash water and produce 425kL of waste backwash water per backwash	Estimated reduction of around 30% based on average filter run times
4	Success Factor	Table 1-1	Filter backwashing occurs a maximum of once per 24hours with settled water turbidity of 2NTU (ie filter run time>23hrs at the 500ML/day sustainable filtered water flow rate)	Filter performance modelling indicates a flow of 500ML/day can be achieved with a filter run time of >23hrs for settled water turbidity of up to 1.1 NTU Alternatively at 500ML/d and 2 NTU indicates run time per filter is 12,9hrs	Filter backwashing will need to occur more frequently during poor settled water quality events or the plant flow rate will need to be reduced. **The specified performance requirement cannot be achieved**
5	Design Flow	Table 2-1	Maximum 650ML/day with 20 filters in operation	Filter performance modelling indicates a flow of 650ML/day can be achieved with a filter run time of >23hrs for settled water turbidity of up to 0.8 NTU	Filter run time is primarily a function of settled water solids loading
6	Design Flow	Table 2-1	Sustainable filtered water flow of 500ML/day with 20 filters in operation, 2NTU settled water quality, filter run time >23hrs	Filter performance modelling indicates a flow of 500ML/day can be achieved with a filter run time of >23hrs for settled water turbidity of up to 1.1 NTU	Filter run time is primarily a function of settled water solids loading . **The specified performance requirement cannot be achieved**
7	Design Water Temperature	Table 2-2	Summer 32degC Winter 14degC	Temperature monitoring proposed for seasonal backwash rate adjustment	
8	Refurbished Filters Design Criteria	Table 2-3	Filter run time >23 hrs Design filtration load rate <12m/hr	Filter performance modelling indicates a filter run time of >23hrs for design filtration rate of 12m/hr and a settled water turbidity of up to 1.05 NTU	Filter run time is primarily a function of settled water solids loading
9	Refurbished Filters Design Criteria	Table 2-3	Backwash media expansion >20% at 20deg C	Max backwash rate of 58m3/m2/hr will provide required bed expansion	
10	Filter Media Design	Table 2-4	Filter Coal 660mm ES 1.2mm UC<1.35 Sand 600mm ES 0.65mm UC<1.35	Filter Coal 900mm ES 1.5mm UC<1.35 Sand 400mm ES 0.65mm UC<1.35	A deeper and larger size filter coal layer proposed to match media backwash rates and provide increased solids holding capacity (filter run times)
11	Filter Media Design	Table 2-4	L/d of 1200	L/d of 1215	
12	Filter Media Design	Table 2-4	Support media: Sand – Garnet 200mm overall depth	No support media proposed	Fine slot opening underdrain system proposed due to limitation in overall filter box depth
13	Filtration Unit Water Quality and Quantity Goal	Appendix A Table 14-8	Protozoa log reduction – 3.5 Turbidity of settled water @ up to 650ML/day – 2NTU Turbidity of settled water @ up to 200MLday – 3NTU (poor raw	Refer Item 2 above Refer Item 5 above Refer Item 1 above	USEPA Enhanced Surface Water Treatment rule only provides a 3 log credit for conventional treatment process. Protozoa log reduction inferred based on turbity criteria of Item 2

			water quality event, raw water 1000NTU) Maxima filtered water turbidity – 0.2NTU 95% treated water turbidity 0.1NTU Filter availability 23 hrs/day (96%) Production rate at medium process risk – 540ML/day (12m/hr filtration rate) Production rate at low process risk – 495Ml/day (11m/hr filtration rate)	Refer Item 2 above Refer Item 2 above Refer Item 2 above – function of settled water turbidity Filter performance modelling indicates a flow of 540ML/day can be achieved with a filter run time of >23hrs for settled water turbidity of up to 1..05 NTU Filter performance modelling indicates a flow of 495ML/day can be achieved with a filter run time of >23hrs for settled water turbidity of up to 1.16 NTU	
14	Backwash Launder Concept Design Parameters	Appendix A Table 14-9	Launder dimensions 500mm wide 625mm deep Free surface from launder lip – 1100mm Launder height above expanded media – 200mm Launder grade >1:1000	Launder dimensions 525mm wide 700mm deep for 8 launders Free surface from launder lip – 533mm Minimum 230mm, target 340mm subject to hydraulics and structural constraints No grade required as launder is always submerged	Size increased due to higher backwash rate Increased allowance for media expansion
15	Air scour backwash Design Targe	Appendix A Table 14-10	Flow balance across filters within 5% New common blowers – duty standby Air scour grid combined with underdrain	Specification requirement for underdrain supplier New common blowers – duty standby to be provided Single underdrain lateral system required.	Industry standard, Underdrain supply specifcation to mandate this as performance requirement Include in underdrain specification
16	Filters Concept Design Parameters	Appendix A Table 14-11	Air scour range – 50-60m/hr Nozzle slot width 1.0 to 1.2mm Lateral materials – 316SS Launder Nos. per filter - 8	Air scour range – 50-60m/hr Nozzle slot width 0.2 to 0.3mm Lateral materials 316SS or HDPE Launder Nos. per filter – 8 for steel or FRP, 6 for concrete	Typical for dual media Narrow slot to avoid the need for a media support layer within the filter HDPE also considered Launder material to be determined following structural check of launder support wall and additional support requirements for steel or FRP launders

STANTEC AUSTRALIA PTY LTD

Technical Memo

Project:	**Mt Crosby East Bank WTP Filter Refurbishment**	*Project Code:*	83504178
Date:	6 December 2017	*Memo No.:*	5
To:	Bart Vervetjes, Seqwater		
From:	Steve Moore		
Subject:	**Underdrains Tender and Specification Structure**		

Rev. No.	Date	Description	Prepared By	Checked By	Reviewed By	Approved By
1		Draft for Client	SM	CP	MA	SM

• INTRODUCTION

Seqwater has confirmed a project procurement strategy to procure underdrains in advance of finalised designs, and documentation of the specifications for the General Contractor works for the project. The underdrains are to be provided free issue to the General Contractor. This Technical Memo identifies the approach to be taken for the procurement of the Underdrains System

• TENDER DOCUMENTATION RESPONSIBILITIES

The responsibilities for the compilation of the overall Underdrains tender document are:

Document Element	Responsible Party
Conditions of Tendering	Seqwater
Conditions of Contract	Seqwater
Tender Response Requirements and Schedule - Commercial	Seqwater
Tender Response Requirements and Schedule – Technical + Draft Pricing Schedule	Stantec
Technical Specification	Stantec

- ## PROPOSED TENDER AND SPECIFCATION STRUCTURE

The following provides a proposed outline structure for the Tender response and Specification components to be prepared by Stantec.

The specification will require some inputs form Seqwater highlighted yellow:

In addition based on the procurement strategy there are some potential conflicts in the overall performance responsibilities between the Supplier and the General Contractor. The proposed approach for the Suppliers limit of liability is:

- The Supplier to provide full oversight of the installation of 2 filter cells
- Those filter cells to be Manometer tested prior to installation of media, to demonstrate flow and headloss across the laterals. These tests will have performance limits and be checked against CFD modelling predictions
- **Successful tests will discharge the Supplier for hydraulic performance purposes**
- Once media is installed the filters will be subject to further tests which will be the liability of the General Contractor

Mt Crosby Underdrains Supply Tender Structure

1 TENDER REQUIREMENTS

1.1 COMPANY DETAILS

H&S
Financial

1.2 ALTERNATIVE OFFERS

1. Installation using existing filter cell outlets
2. Installation requiring filter cell structural modifications

1.3 SYSTEM TECHNICAL DESCRIPTION

- Technical Details
- Installation concept drawings
- Country of Manufacture
- Storage Requirements (eg undercover)
- Ancillary specifications for installation

1.4 REFERENCE PROJECTS

1.5 MANUFACTURE AND DELIVERY PROGRAM

2 SPECIFICATION

2.1 GENERAL

Contract Overview

Contract Documentation

- Specification
- Drawings
- Schedules

Legislative Requirements

- Customs Clearance
- Principle Contractor
- OH&S Legislation
- Fees – import duties, port fees etc

Warranties

2.2 SCOPE OF WORKS

Scope of Works

- Design inc CFD modelling
  - Design limit to be at Filter Cell air supply control valve
  - Include hold down design
- Delivery to site and off loading
  - Deliver to West Bank
  - Provide all Cranage
  - Packaging requirements
  - SEQWATER to advise if under cover storage area available
  - Deliver as batches
    - Batch #1 Qty for 8 filters
    - Batch #2 Qty for 12 filters
- Fixings and supports, gaskets, specialty grouts etc
- O&M Manuals as applicable
- Technical Support during installation and testing

Limits of Contract

- Design – reference drawings, technical specifications
- Supply
- Interface points
- Supply by others (laydown hardstand area, site shed etc)

Performance Requirements

- Design life
- Flows – design flowrates for air, water, air and water, uniformity of flow distribution
- Head Loss max/min during normal operation and backwashing
- Media Retention – media spec

2.3 TECHNICAL SPECIFICATIONS

2.3.1 Stainless Steel Systems

2.3.2 HDPE Systems

2.4 TECHNICAL SUPPORT ATTENDANCE ON SITE

- Contractor and Superintendent installation training

    - Seqwater inspector to be trained in critical installation requirements
- Contractor installation oversight
    - Propose full time on site for two filter cells
    - Thereafter 2 quality audit visits of further cell refurbishment
- Contractor performance proving
    - First 2 filter cell installations to have manometer testing of the underdrains prior to placing media to validate actual performance against CFD outputs.
    - Performance acceptance of the underdrains (Supply Contract) based on the manomometer testing
    - Underdrains supplier will not have any ongoing obligations of performance testing once media is in place, that performance will rest with the general Contractor
- Review of as-built drawings prepared by general contractor
- Inputs to O&M manuals

2.5 TESTING AND INSPECTION

- CFD validation
- Factory Inspections
- Factory performance test on full length lateral
- Pre-shipping inspection
- Post Installation testing
    - Manometer testing
    - General Contractor works will be subject to other installation testing eg pull out test of hold down bolts

3 SCHEDULES

- Materials of construction
- Hydraulic performance characteristics
- Pricing

STANTEC AUSTRALIA PTY LTD

Technical Memo

Project:	**Mt Crosby East Bank WTP Filter Refurbishment**	*Project Code:*	83504178
Date:	9 January 2018	*Memo No.:*	4
To:	Bart Vervetjes, Seqwater		
From:	Steve Moore		
Subject:	**Filter Inlet Gate Replacement**		

Rev. No.	Date	Description	Prepared By	Checked By	Reviewed By	Approved By
1	9/1/18	Draft for Client	IH	LC	SM	SM

• INTRODUCTION

Stantec has been engaged by Seqwater to provide engineering design services for the filter refurbishment works at the Mt Crosby East Bank Water Treatment Plant (WTP). Part of the detailed design scope of works for this project includes replacement of the existing hydraulic filter inlet gates in filter stages 1 and 2 with new electrically actuated gates. This technical memorandum details the constructability issues and alternatives to replace these gates.

• EXISTING GATES

The existing inlet gates were installed as early as 1956 and have reached the end of their useful life, and a design for the replacement of the gates is required as part of the Contract for the filter refurbishment project.

BASIS OF DESIGN AND CONSTRUCTABILITY CONSIDERATIONS

Table 1, below, lists general information about the existing filter inlet gates. Figure 1 shows an elevation view of the existing inlet gate.

Table 1. Existing Filter Inlet Gates Details

Parameter	Value
Flow Service	Settled Water
Gate Type	Downwards Closing
Gate Size(mm)	750 x 750
Gate Material	Cast Iron
Actuator Type	Hydraulic

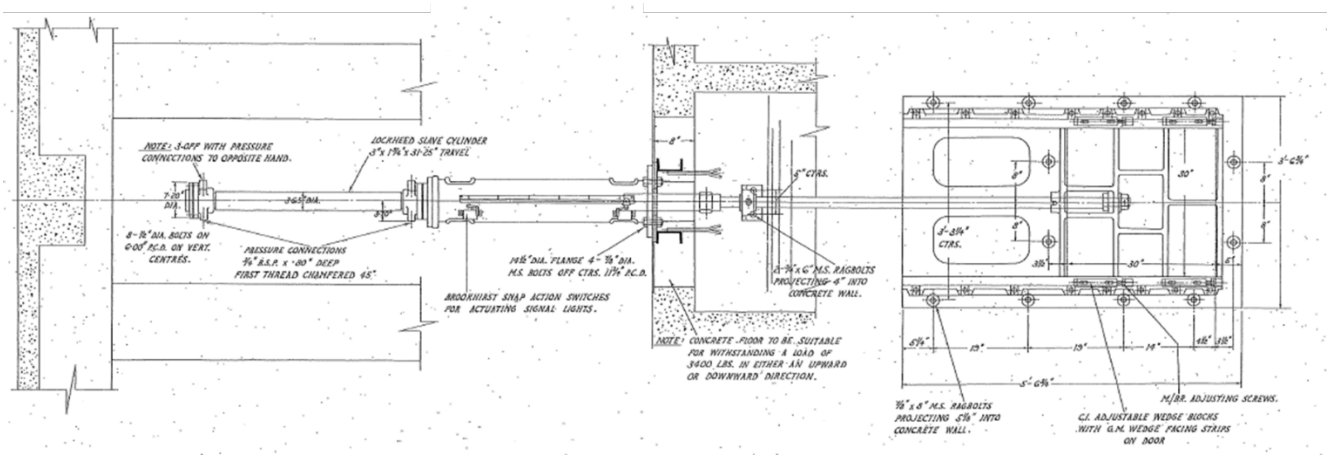

Figure 1. Elevation View of Existing Inlet Gate

The existing gates are located within a narrow concrete chamber connecting the settled water channel to the filter cell. The chamber is approximately 700mm high before reaching the inlet opening on the outside face of the filter cell, where the gate is mounted. The layout of the filter inlet channels is shown on the 3D view in Figure 2. The location of these gates makes it difficult to access the gate and frame (actuators are accessible from the gallery above), and any work associated with their replacement requires the settled water channel to be isolated. The process to isolate the settled water channel takes 12 filters offline (60% reduction in plant capacity). The design of the replacement gates needs to consider and minimise the duration of the isolation of the settled water channel.

To access the existing gates, once the settled water channel is isolated and drained, personnel need to enter the settled water channel through an access hatch—a task that will require specific provisions for working in a confined space. Personnel would need to crawl through the concrete duct (700x600) to access the gate on the wall of the filter cell. Due to the restricted height in this channel, it may be difficult to gain access or manouvre equipment to remove the existing gate and install a new gate in the same location.

Details of the existing gate indicate part of the frame may be cast into the concrete structure. Notwithstanding this, considering the corroded condition of the gate (ref Figure 3) and the age of the structure, removal of the gate may cause damage to the concrete which would require rectification. It is considered that the following risks associated with removal of the existing gates and installation of new gates in the same location require an alternative approach to the replacement of the filter isolation gates.

- Restricted work space has significant OH&S risks as well as risks of prolonged construction process, due to restricted working arrangements increasing the period of isolation of the settled water channel.

- Removal of the existing gates may damage the concrete structure requiring remediation or require alternative fixing arrangements of the new gates to avoid damaged concrete areas, which may increase the period of isolation of the settled water channel.

It is considered that a design solution avoiding replacement in place of the existing gate assemblies be adopted. Alternative arrangements provide options as to whether the existing gates are left in place and permanently open or removed. The existing gates can be lifted out of their frames through the access hatches in the gallery above. The gate frames can be left in place, as they are currently cast into the existing concrete. This decommissioning option is recommended in lieu of leaving the existing gates in place in an open position as it will prevent either inadvertent closure or failure of the existing gates.

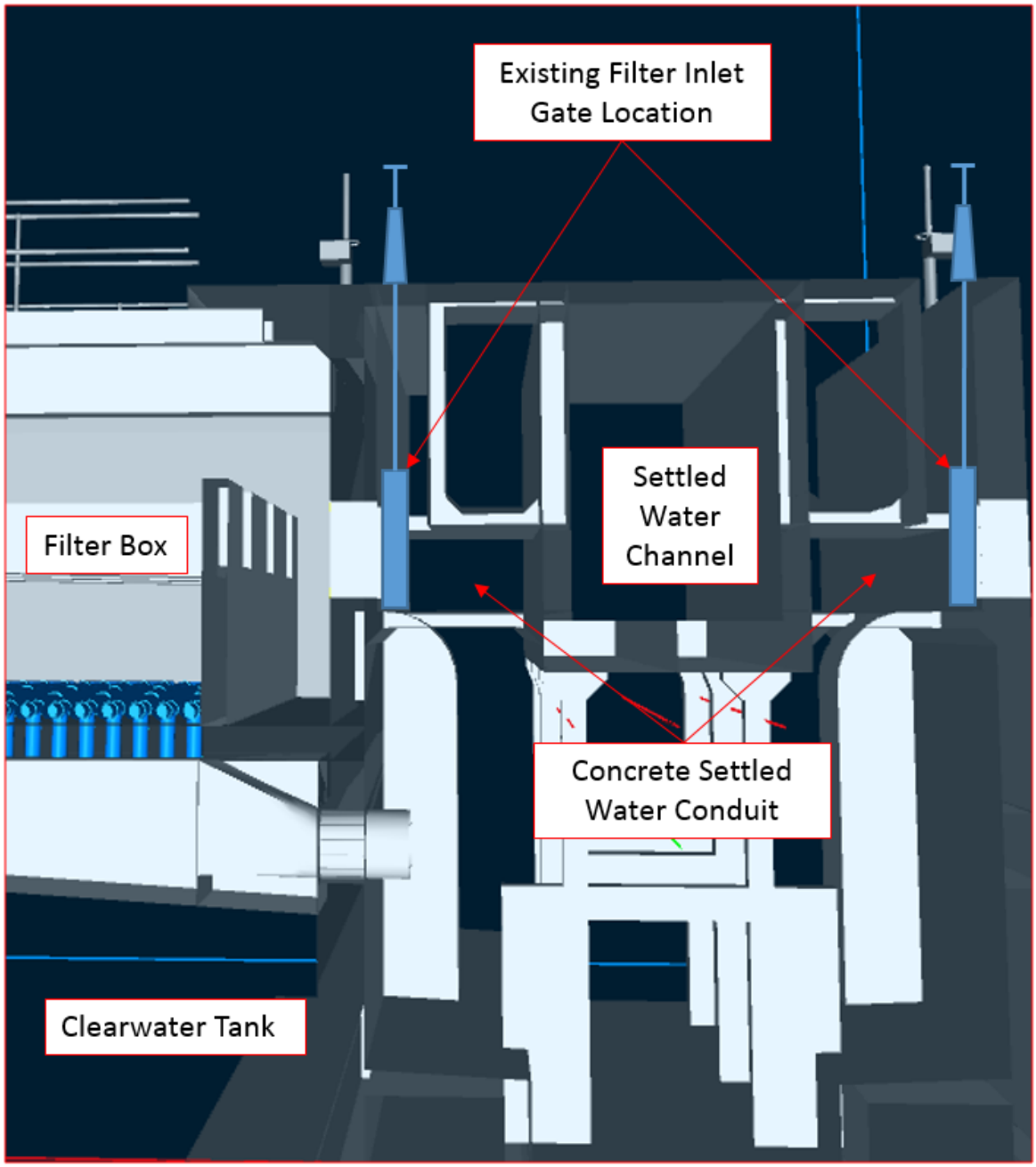

Figure 2. 3D View of Existing Filter Arrangement

Figure 3. Photograph of the Existing Gate Opening (from Settled Water Channel)

• GATE REPLACEMENT ALTERNATIVES

Due to the limited access and constructability challenges presented by the location of the existing gates, four alternatives were developed and evaluated, considering different gate types and locations for mounting the replacement gates.

1. Downwards closing gate with single stem mounted within the filter cell.
2. Downwards closing gate with dual stem and gearbox mounted within the filter cell.
3. Sideways opening gate mounted within the filter cell.
4. Downwards closing gate mounted in the settled water channel.

The various options were assessed and supporting advice provided from two penstock vendors (AWMA Water Control Solutions and Australian Water Engineers (AWE)). Under the four alternatives, the gates are to be electrically actuated and performance requiremetns proposed to be in accordance with AS6401 Knife-Gate Valves for Waterworks Purposes (leakage <0.3 liters/minute per meter of seal perimeter).

ALTERNATIVE 1

Alternative 1 is a 750 x 750 downwards closing gate mounted to the inside wall of the filter cell. A 3D view showing the Alternative 1 gate is shown below in Figure 4A.

One design constraint which was considered is the existing concrete T-beam within the filter cell, which provides structural support, and spans directly above the center line of the gate opening. Mounting a traditional downwards-closing gate in this position will involve coring a hole in the beam for the gate stem to extend though. There is sufficient space above the filter inlet opening, for the gate to open fully and not restrict the filter inlet.

The impact of coring through the beam has been assessed and will have negligible impact on the critical structural action of the beam. The location of the proposed cored hole (100dia) longitudinally along the beam is in the zone of negative bending (tension in the top face of beam). As a consequence coring through the beam and cutting reinforcement in the bottom of the beam will not impact the structural integrity of the beam, as the beam structural action is reliant on the compressive strength of the concrete in this zone. The top flange of the beam transitions into the filter gallery floor and has substantial capacity which can tolerate the coring.

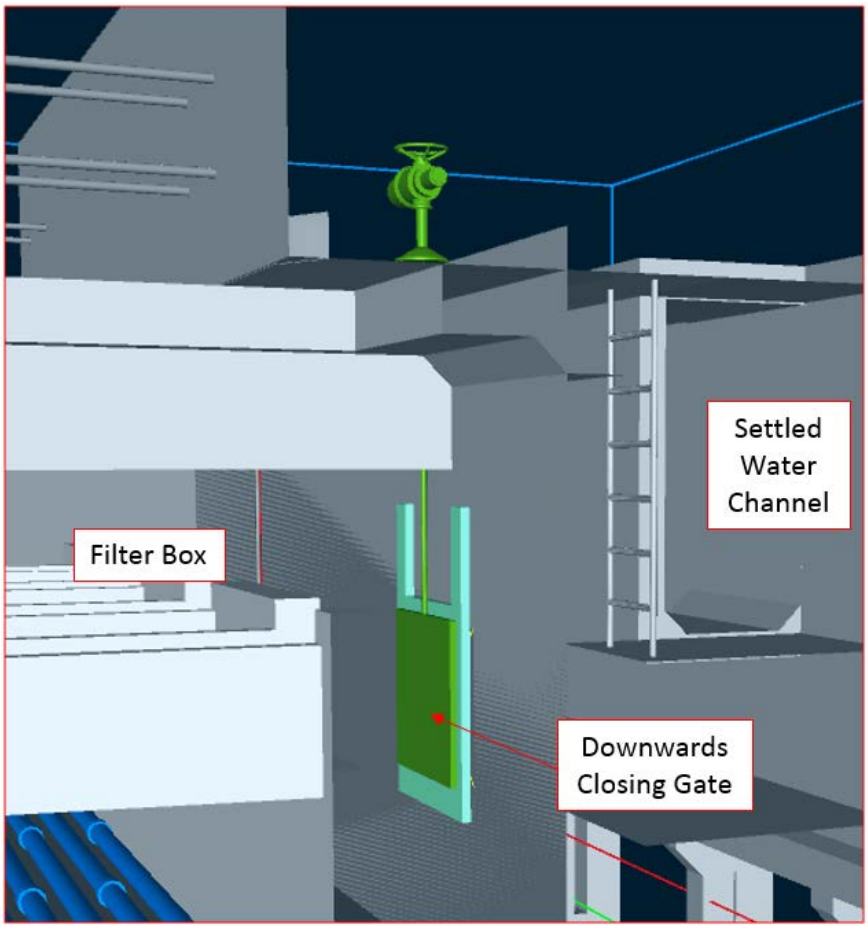

Figure 4A 3D View of Alternative 1 Gate

ALTERNATIVE 2

Alternative 2 is a 750 x 750 downwards closing gate mounted to the inside wall of the filter cell. This alternative employs a dual stem system with a series of gearboxes to offset the gate stems from one another in order to clear the beam above the gate opening. The offset stems extend through the floor above and the gearboxes and electric actuator is mounted inside of the filter gallery. A 3D view showing the offset stem gate is shown below in figure 5.

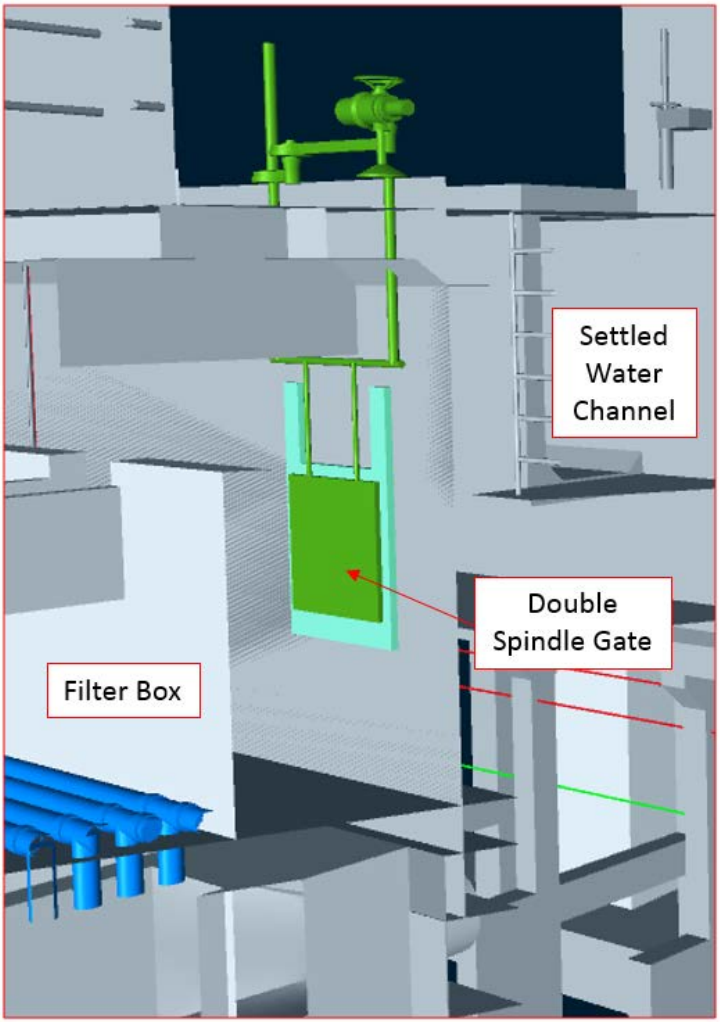

Figure 5. 3D View of Alternative 2 Gate

The gearboxes are used to connect the two stems together at floor level, ensuring the gate stems travel as one and prevent jamming of the gate in its frame. The double spindle arrangement is common for very large penstocks, however, it is not often recommended for gates of this size. For a 750 x 750 gate, the double spindle type would likely be 60 – 100% higher in capital cost as compared to other gate types.

ALTERNATIVE 3

Alternative 3 is a 750 x 750 horizontally opening gate which, is mounted on the face of the filter cell. This type of gate uses a rack and pinion arrangement so the stem is offset to one side of the opening. A 3D view showing the sideways opening gate is shown below in Figure 6.

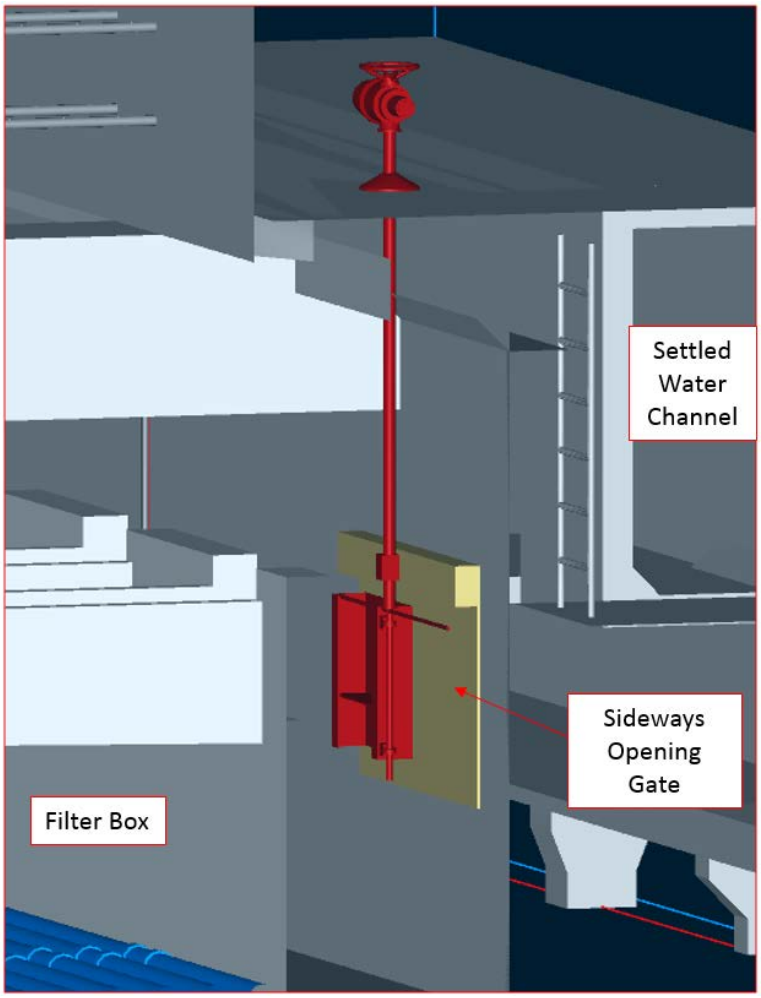

Figure 6. 3D View of Alternative 3 Gate

Horizontally opening gates are most commonly used in environmental applications, for flow control of waterways or fish ways, but have been used in water and wastewater projects. This gate will also be electrically actuated, with the actuator mounted inside in the filter gallery above.

ALTERNATIVE 4

Alternative 3 is to mount a traditional downwards closing penstock over the opening in the settled water channel, upstream of the existing filter inlet gates. As the structural beam does not extend through the settled water channel, a traditional rising stem gate can be used if mounted in this position. A 3D view of the Alternative 3 gate is shown below in Figure 7.

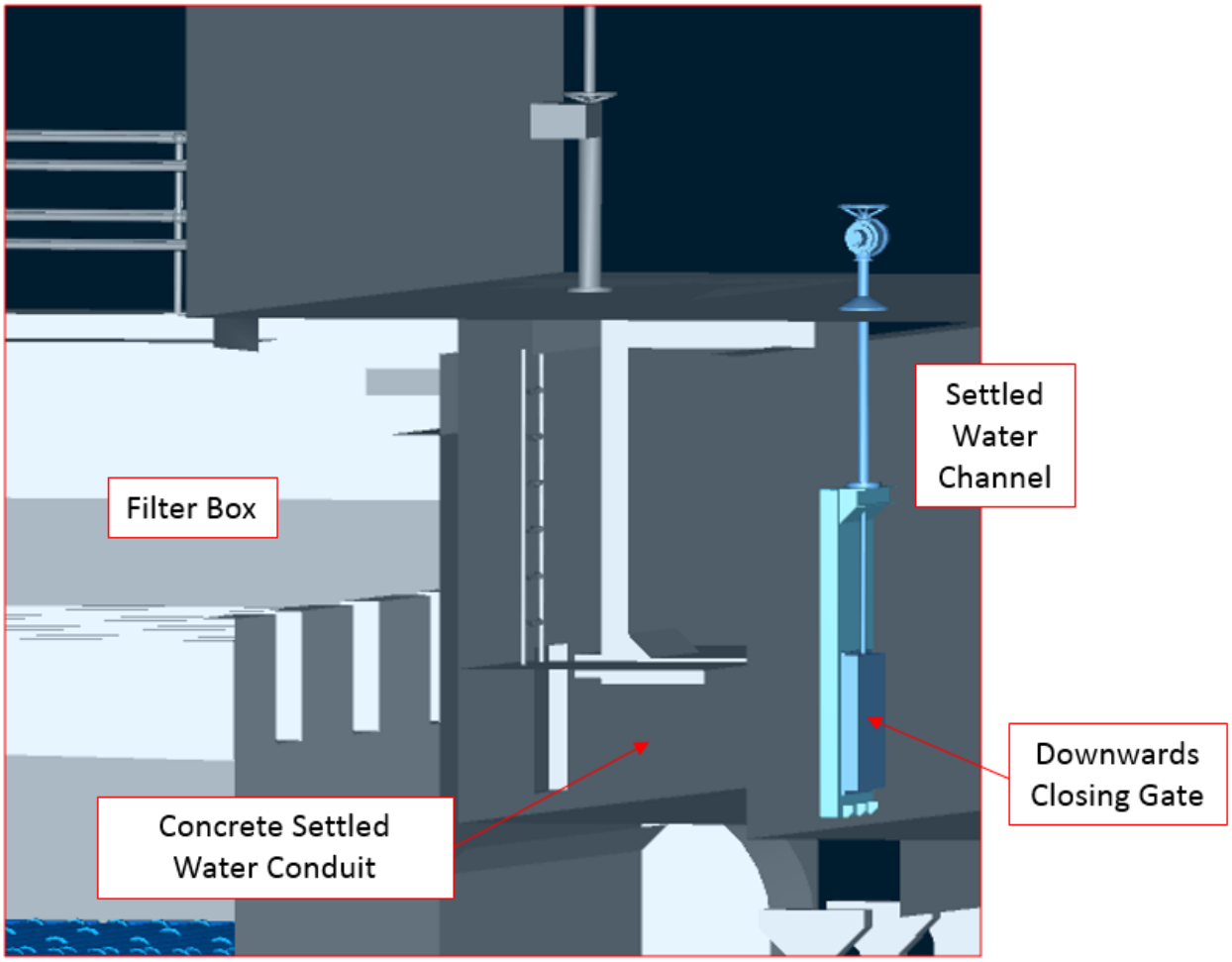

Figure 7. 3D View of Alternative 4 Gate

This construction would involve cutting a new opening in the concrete filter gallery floor to install and access the gate. In addition a topping layer of concrete (100mm) would be required in the filter inlet conduit, to provide a substrate to secure the bottom frame of the gate to. This work would take place within the filter gallery, requiring confined space entry, and the required concrete works would extend the amount of time that the settled water channel needs to remain empty.

ALTERNATIVE EVALUATION

Constructability:

Installation of the new filter inlet gates will require the settled water channel to be isolated and drained. This process will take 12 filters offline at once, resulting in a 60% reduction in plant capacity. As such, alternatives with shortened construction durations are preferable, as they reduce the amount of time which the plant is operating at limited capacity.

In addition preference for industry standard gate configuration with least mechanical components requiring maintenance is recommended

Alternatives 1, 2 and 3 all involve installation of gates within the filter cell. The filters are concrete tanks, open to the atmosphere, so equipment and personnel can be easily lowered into the work area. The installation tasks need to take place in the area between the filter cell wall and the gullet wall (approximately 900 wide), which will limit equipment mobility and allowable lay-down area for materials and tools. The existing gates can potentially be used as a means of double isolation between the sedimentation basins and the works face during construction for these three options.

Alternative 4, the gate mounted within the settled water channel, will require the most time to construct due to the necessary concrete works. New openings will be cut into the top slab of the settled water channel as well as placement of a concrete screed for the gate to mount to. This work would take place within the confined space of the settled water channel, which presents challenges both for man access and equipment handling.

Maintenance:

The inlet gates do not require a significant amount of regular maintenance activities, aside from periodic visual inspections. Gates use ultra-high molecular weight polyethylene (UHMWPE) for guides and seals to reduce the maintenance required on bearing surfaces. Seals will, however, require replacement every 15 years on average for gates that are operated daily.

All Alternatives would require the settled water channel to be isolated when the gates are removed for maintenance.

A criteria comparison of the four alternatives is summarized below in Table 2.

Table 2. Alternative Evaluation

Alternative	Advantages	Disadvantages
Alternative 1 – Downwards Closing Gate in Filter Cell	• Low Capital Cost • Proven gate arrangement common in water treatment applications	• New opening will need to be cored into existing beam in filter cell • Filter cell will need to be dewatered to repair the gate or replace the seals in the future
Alternative 2 – Dual Stem Gate in Filter Cell	• No modifications required to the structural beam in the filter cell • Simple to construct – work can be done from inside the filter cell	• High Capital Cost • Gearboxes are additional mechanical items that require maintenance – occasional lubrication • More complicated mechanical configuration • Filter cell will need to be dewatered to repair the gate or replace the seals in the future
Alternative 3 – Horizontally Opening Gate in Filter Cell	• Mid-Range Capital Cost • No modifications required to the structural beam in the filter cell • Simple to construct – work can be done from inside the filter cell	• Filter cell will need to be dewatered to repair the gate or replace the seals in the future • Additional mechanical moving parts below water line, more complicated mechanical configuration
Alternative 4 – Downwards Closing	•	• More challenging construction – new openings cut into gallery floor

Gate in Settled Water Channel	• Proven gate arrangement common in water treatment applications	• Confined space work location • More substantial concrete works (new opening in filter gallery floor

• RECOMMENDATIONS

The existing filter inlet gates at the Mt. Crosby East Bank Water Treatment Plant require replacement. Due to their difficult-to-access location and the condition of the concrete to which the gates are mounted it is recommended that the replacement gates be installed in a different position to the current gates. The existing gates can be removed through the access hatches in the filter gallery above and the hydraulic actuators and associated piping demolished. The existing gate frames can be left in place to avoid damaging the concrete channels which the frames are cast into.

For the replacement gate, Alternative 1—the traditional downwards-closing gate mounted in the filter cell—is recommended. This alternative is recommended because the gate type is common for water treatment applications and it is a well proven technology. Furthermore, the location of the new gate allows for a relatively simple installation. Seal replacement is estimated to be required every 15 years for a gate that is operated once a day.

Technical Memo

Project:	**Mt Crosby East Bank WTP Filter Refurbishment**	*Project Code:*	83504178
Date:	25 January 2018	*Memo No.:*	7
To:	Bart Vervetjes, Seqwater		
From:	Chris Povey		
Subject:	**Air Scour System**		

Rev. No.	Date	Description	Prepared By	Checked By	Reviewed By	Approved By
1	25/1/18	Draft for Client	JB	IH	CP	CP

• INTRODUCTION

Stantec has been engaged by Seqwater to provide engineering design services for the filter refurbishment works at the Mt Crosby East Bank Water Treatment Plant (WTP). Part of the detailed design scope of works for this project includes the installation of new air scour blowers and air scour supply pipeline. This technical memorandum details the alignment of the air scour supply pipeline between the air scour blowers and the filter units as well as the proposed civil layout of the air blowers.

BASIS OF DESIGN AND CONSTRUCTABILITY CONSIDERATIONS

Table 1. Proposed Air Scour Pipework Details

Parameter	Value
Pipe Material	Stainless Steel
Delivery Header Pipe Size	350mm
Distribution Header Pipe Size	350mm
Air Scour Rate	60m/hr

This memorandum is looking into the delivery and distribution header alignments to each of the filter units and the layout of the air blower room. It's assumed that the air scour suppliers will detail the internal pipework from the distribution header to the actual scour units. As such the alignment covered in this memo stops at the filter units.

The Delivery Header is the trunk air pipework from the blowers to each of the filters.
The Distribution Header is the air pipework off the delivery header to each of the individual filter beds.

It's anticipated that the Stage 1&2 Filters are upgraded sequentially first and then the Stage 3&4 filters upgraded second.

FILTER STAGE 1&2 ALIGNMENT

A detailed options assessment was not undertaken for the stage 1&2 filters as the existing filter control building could comfortably support the air header pipework. The filter control room building for stages 1&2 was built out of concrete with steel reinforcement. Because of this, the roof is sturdy and could support the delivery pipework and any maintenance crew.

A permanent fall arrest system would need to be installed in order to provide safe access to the pipework on the roof. This can be done by providing a handrail on the perimeter of the roof or attaching a latch-on harness system to the pipework itself.

At each filter bed a 350mm distribution header will drop down from the roof as per Figure 1. The distribution header will have a control valve on it to control the flow of air to the filter bed. The control valve will be located at an operational height, accessible from the existing walkways.

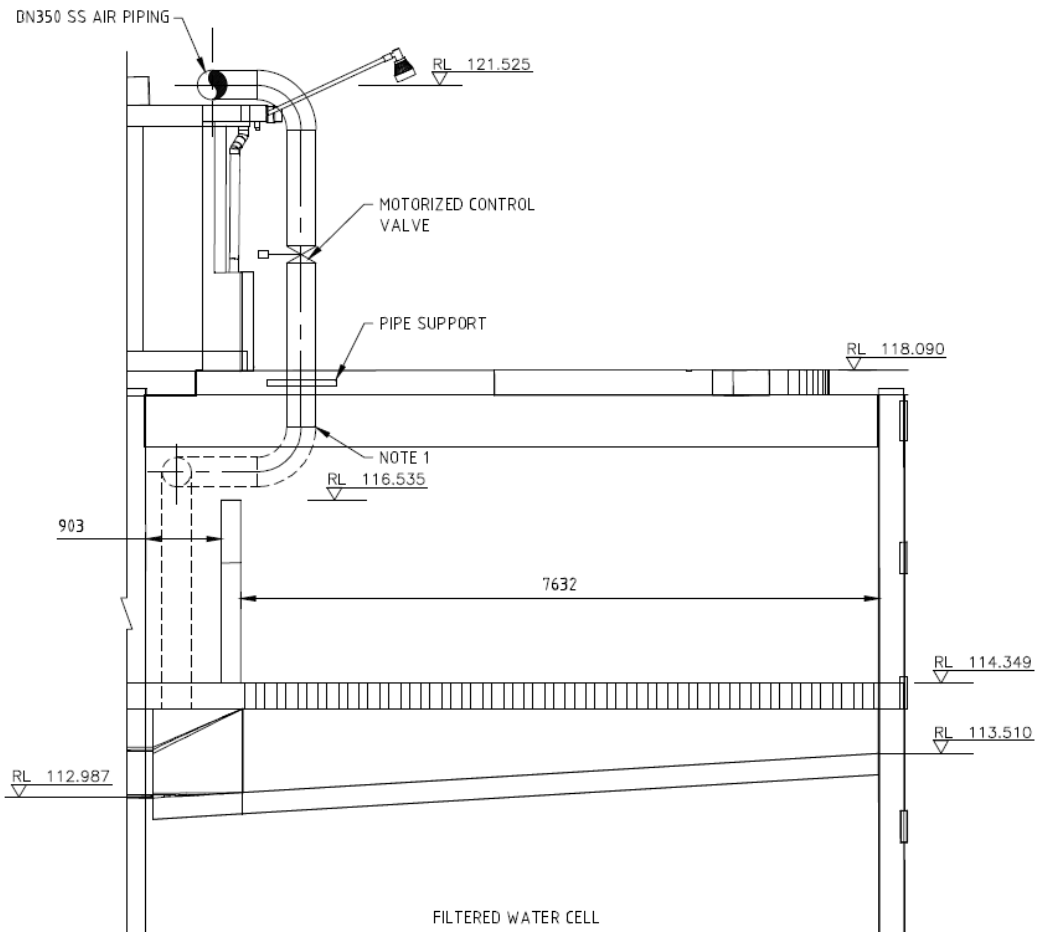

Figure 1. Air Scour Pipework for Filter Stage 1&2

FILTER STAGE 3&4 ALIGNMENT

A number of different air scour pipework locations have been considered for filter stages 3&4.

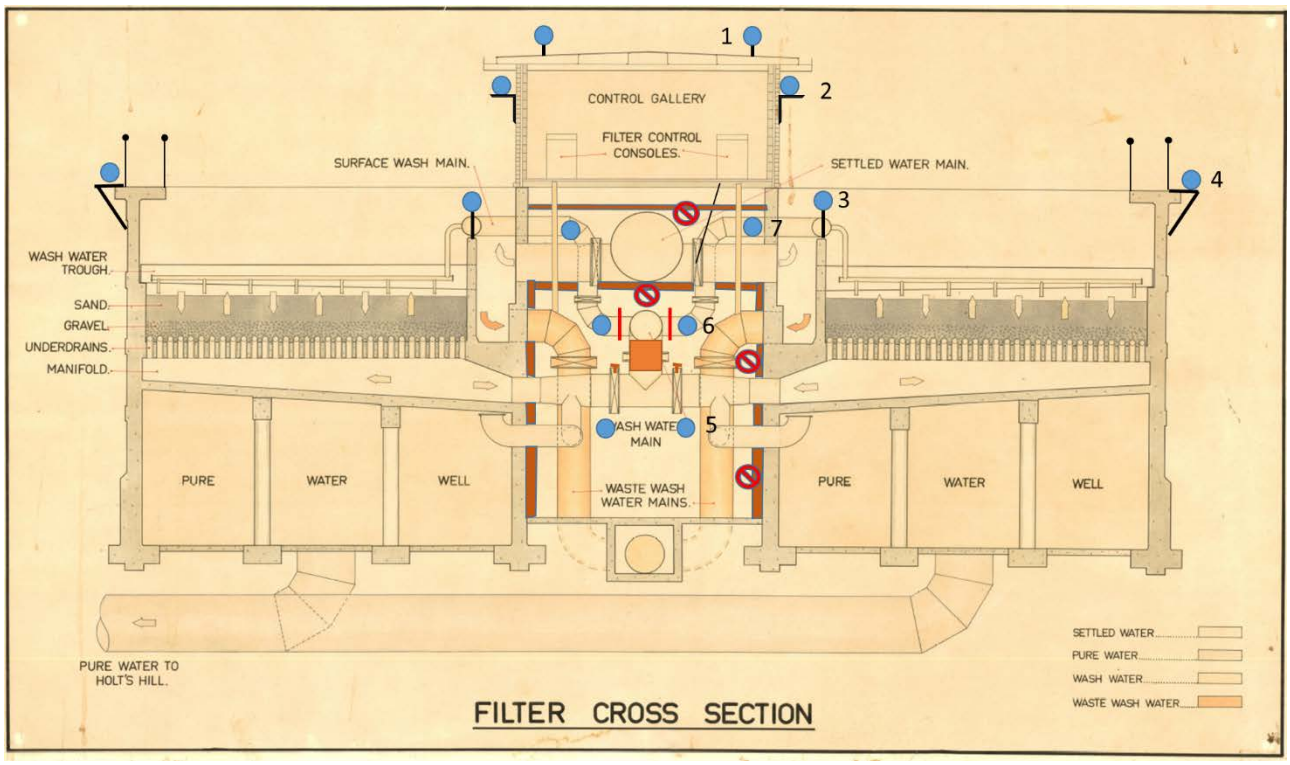

Figure 2. Potential Air Scour Pipework locations for Filters Stage 3&4

Option 1: The air scour delivery header would be suspended above the roof and the distribution pipework would drop from the delivery header to each filter unit. Currently the roof does not have any fall protection, if this option was chosen, a permanent fall protection system would need to be installed. The roof is also a simple ribbed colorbond structure that is not designed to support any pipework nor designed for regular access.

Option 2: The air scour delivery header could be supported under the eaves of the filter control building. The pipe could be supported directly off the blockwork walls using a supported L bracket, or alternatively hung from the roof eaves depending on the structural capacity of the roof. The pipework would be above the existing doorways, but would be in front of the existing louvres.

Option 3: As the surface wash main is being removed and the launders are being raised, there is an opportunity to mount the pipework directly on the raised upper gullet wall. As this option relies on the surface wash main being removed, this option can only be installed in steps as the filter beds are being sequentially upgraded. The delivery pipework would need to be cored through the walkways separating each filter bed. The pipework would also be partly above and partly below the filter operating water level.

Option 4: The air scour delivery header could be attached to the outside of the filter bed walls. The pipework could be supported directly off the concrete filter wall. The distribution pipework would then go above the filter walls and over the outside walkways above head height. As the pipework is a rectangular loop around the outside of the filter beds, an extra 40m pipework would be needed. Connecting the air scour header directly into the end of each filtered water duct which runs centrally under the existing filter floors is not desirable as the duct is quite small at the end and the high rate of air injection would impact on the hydraulic distribution of the backwash water during the combined air and water wash stage of the backwash process.

Option 5: The air scour delivery header could be suspended within the walk space of the filter gallery. This would reduce the width of the filter gallery from 2.6m to about 1.8m. The pipework would be at a workable height and would be relatively easy to install. Without any noise or heat insulation the pipe could expel a large amount of noise into the filter gallery space. Because the delivery header is below the drain down water level of the filter prior to air scour there is a risk that the entire air header could fill with filtered water if there is a broken or faulty valve or the blower faults during the air scour unless the air pipework passes up through the gallery and into the filter cell at a higher level. This option also creates a low point in the

header along the gallery which would need a drain in case of condensation build up in the header over time.

Option 6: When the surface wash main is removed, there could be room for the air scour delivery pipe to sit above the wash water main. This would require careful planning during the construction phase to ensure that the air scour pipes are installed sequentially. Option 6 could potentially restrict the ability to remove a number of large valves on surrounding pipework, in particular the check valves on the settled water main. As with Option 5 and 7, without any noise or heat attenuation, the delivery header could expel a large amount of noise into the filter gallery space. Because the delivery header is below top water level there is a risk that filtered water could leak into the air duct pipework if there is a broken or faulty valve.

Option 7: The air scour delivery header could be suspended in the top corners of the filter gallery as the surface wash main is removed. As with Option 6, Option 7 relies on careful planning during the construction phase. There could be a potential clash with the existing stairway into the filter gallery. As the filter gallery is nearly 8m tall, the installation and maintenance of the delivery header would be difficult. The existing waste water wash main vent pipe is installed 450mm away from the side walls, this creates a number of pinch points when we install the air scour pipework.

Preferred Option – Option 2

Option 2 can be installed independently of any of the filter work, so the entire air scour header pipework could be installed before any of the filter upgrades. The air scour delivery pipework would be above the existing access doors of the stage 3&4 filter control building. The air scour pipework would be in front of the existing louvres.

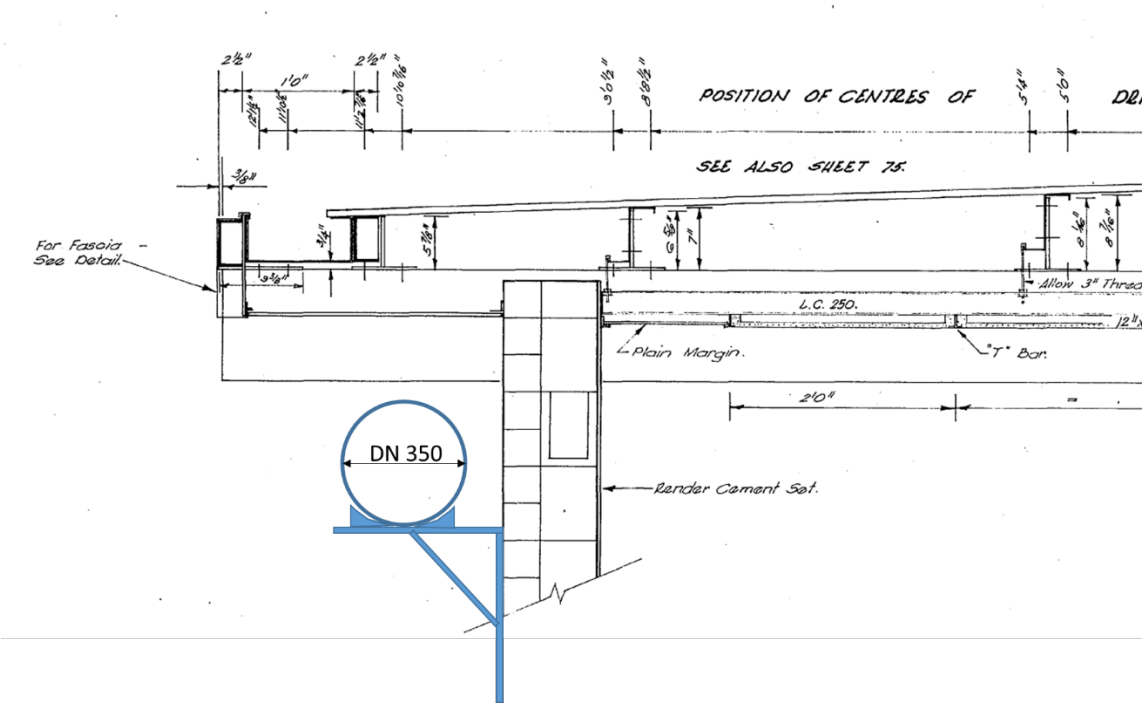

Figure 3. Air Scour Pipework for Filters Stage 3&4

At each filter bed a 350mm distribution header will drop down from the roof. The distribution header will have a control valve on it to control the flow of air to the filter bed. The control valve will be located at an operational height, accessible from the existing walkways. This can be seen in Figure 4.

Figure 4. Superimposed Air Scour Delivery and Distribution Pipework for Filters Stage 3&4

CHEMICAL BUILDING TO FILTER OPTIONS

A number of options exist for the alignment of the air scour delivery header pipework from the chemical building (proposed air blower units location) to the filter beds. The advantages and disadvantages of each option is discussed below.

OPTION 1

Option 1 could be to bury the air scour header pipework under the access road between the existing chemical building and the filter beds.

Advantages:

- Provides some heat and noise attenuation within the ground

Disadvantages:

- Reduce the available width of the access road on both sides
- Potential for condensation settlement within the pipe, condensate would build up in the pipe under the ground, making it hard to discharge.
- Potential pipe expansion issues due to the difference in temperature between the air and ground
- large number of bends, increasing the headloss through the header pipework
- Pipe would need to be buried at least 600mm below ground level
- Unknown services within roadway
- Would need to construct all the stage 3&4 filter air scour pipework in order to start work on the stage 1&2 filters

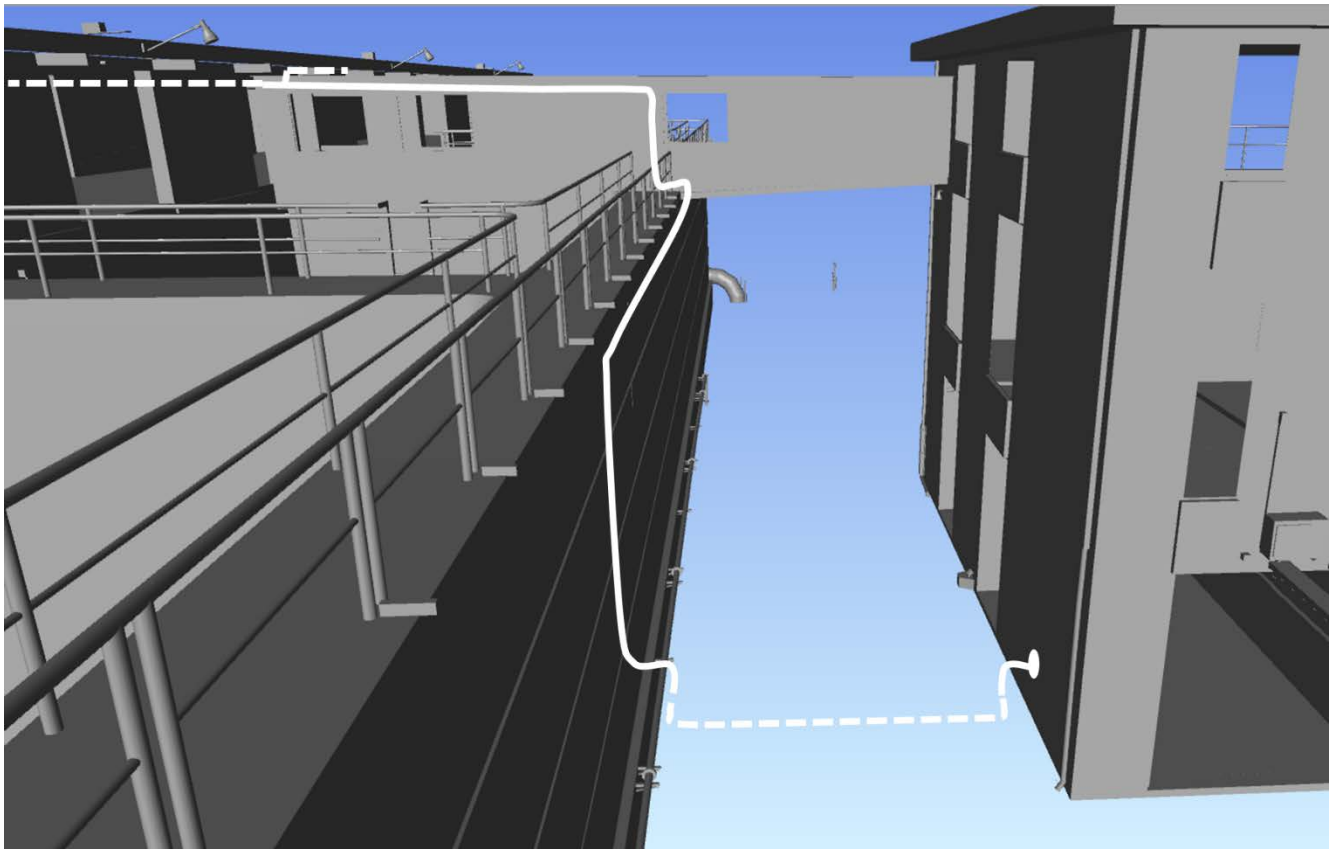

Figure 5. Option 1 Air Scour Pipework Alignment

OPTION 2

Option 2 could be to run the pipework from the blower unit internally within the chemical building. The pipe will exit the blowers and head upwards through the floor above, then traverse to the walkway where it would exit the chemical building.

Advantages:

- Keep full width of the access road
- Contain a large amount of the noise within the building
- The room above the proposed blower room has enough space for the air scour pipework

Disadvantages:

- Significant noise and heat protection would be needed around the internal pipes to stop heat and noise transfer within the building, additional cost.
- Two wall penetrations required
- Would need to construct all the stage 3&4 filter air scour pipework in order to start work on the stage 1&2 filters

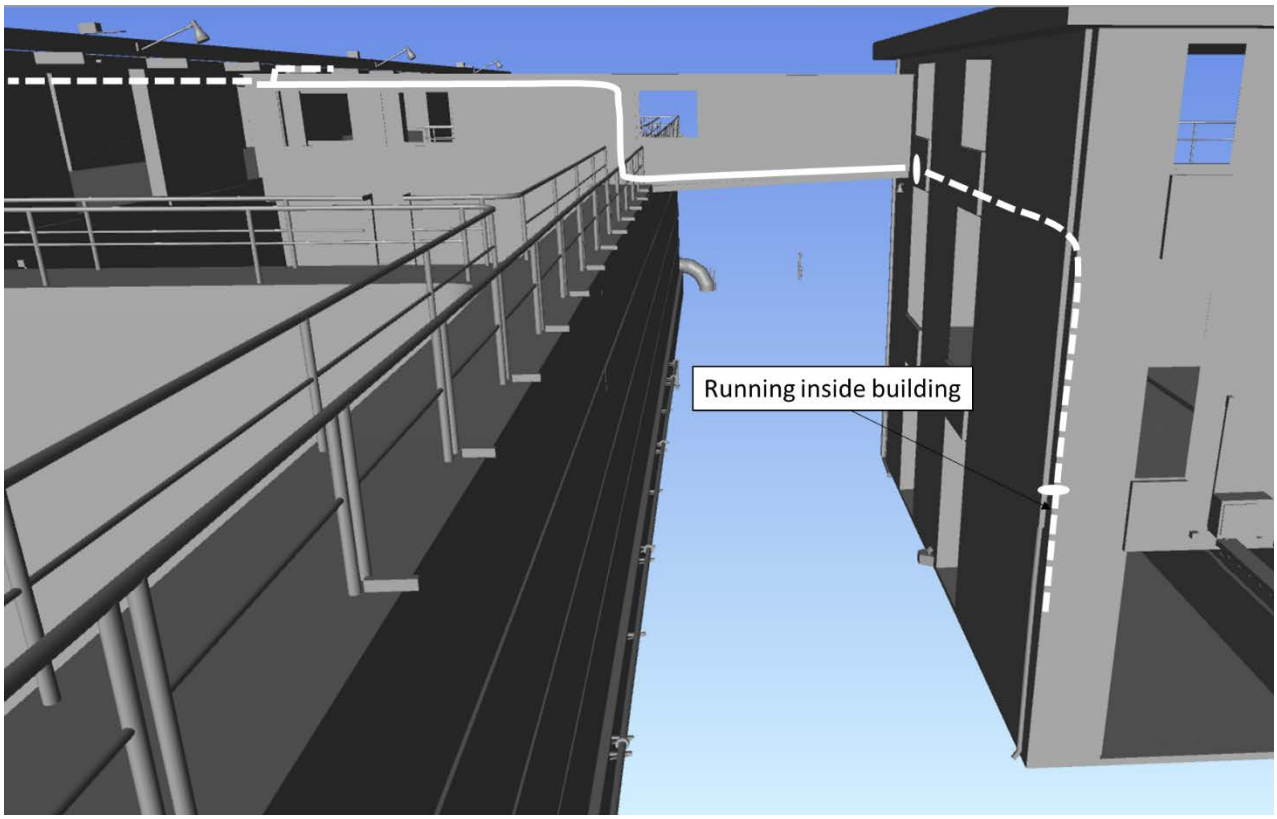

Figure 6. Option 2 Air Scour Pipework Alignment

OPTION 3

Option 3 would be to run the air header pipework on the outside of the chemical building and to the filter stages via the walkway. The alignment has been chosen in order to simplify construction.

Advantages:

- Relatively straight forward to install

Disadvantages:

- As there is no noise suppression on the pipework there is a potential the pipework could be noisy. This could be solved by using a noise insulation pipe wrapping.
- Restricts the available width of the road access way
- Would need to construct all the stage 3&4 filter air scour pipework in order to start work on the stage 1&2 filters

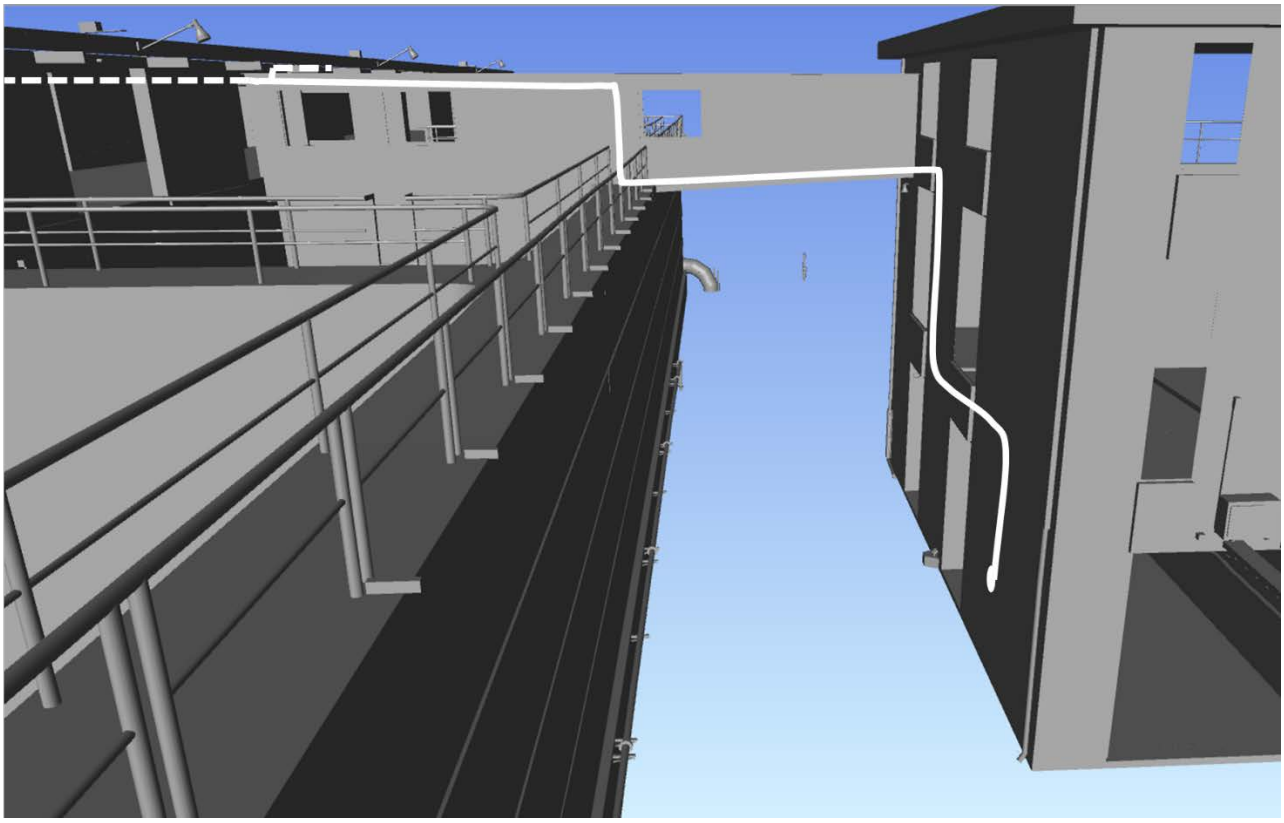

Figure 7. Option 3 Air Scour Pipework Alignment

OPTION 4

Option 4 could be to exit the eastern side of the chemical storage building and span 6.6m to the stage 3&4 filter beds. The delivery header pipework would be mounted on the rim of the stage 3&4 filter beds where there is an existing unused chemicals pipe mounted.

Advantages:

- Allows for the upgrade of filter stage 1&2 before filter stage 3&4.

Disadvantages:

- Pipe spanning the 6.6m between the chemical storage building and the filter beds may need to be thicker to self-support.

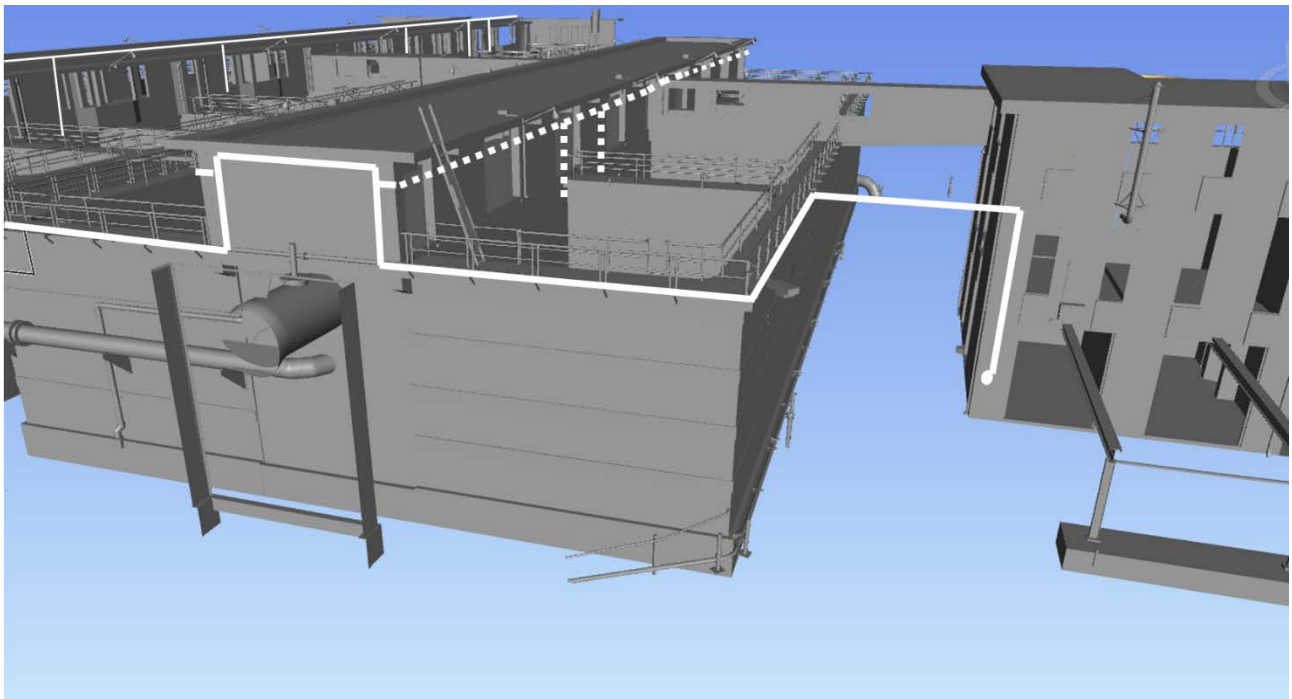

Figure 8. Option 4 Air Scour Pipework Alignment

OPTION 5

Option 5 could be to bury the air scour header pipework under the access road between the existing chemical building and the filter beds.

Advantages:

- Provides some heat and noise attenuation within the ground
- Allows for the upgrade of filter stage 1&2 before filter stage 3&4.

Disadvantages:

- Potential for condensation settlement within the pipe, condensate would build up in the pipe under the ground, making it hard to discharge.
- Potential pipe expansion issues due to the difference in temperature between the air and ground
- large number of bends, increasing the headloss through the header pipework
- Pipe would need to be buried at least 600mm below ground level
- Unknown services within roadway

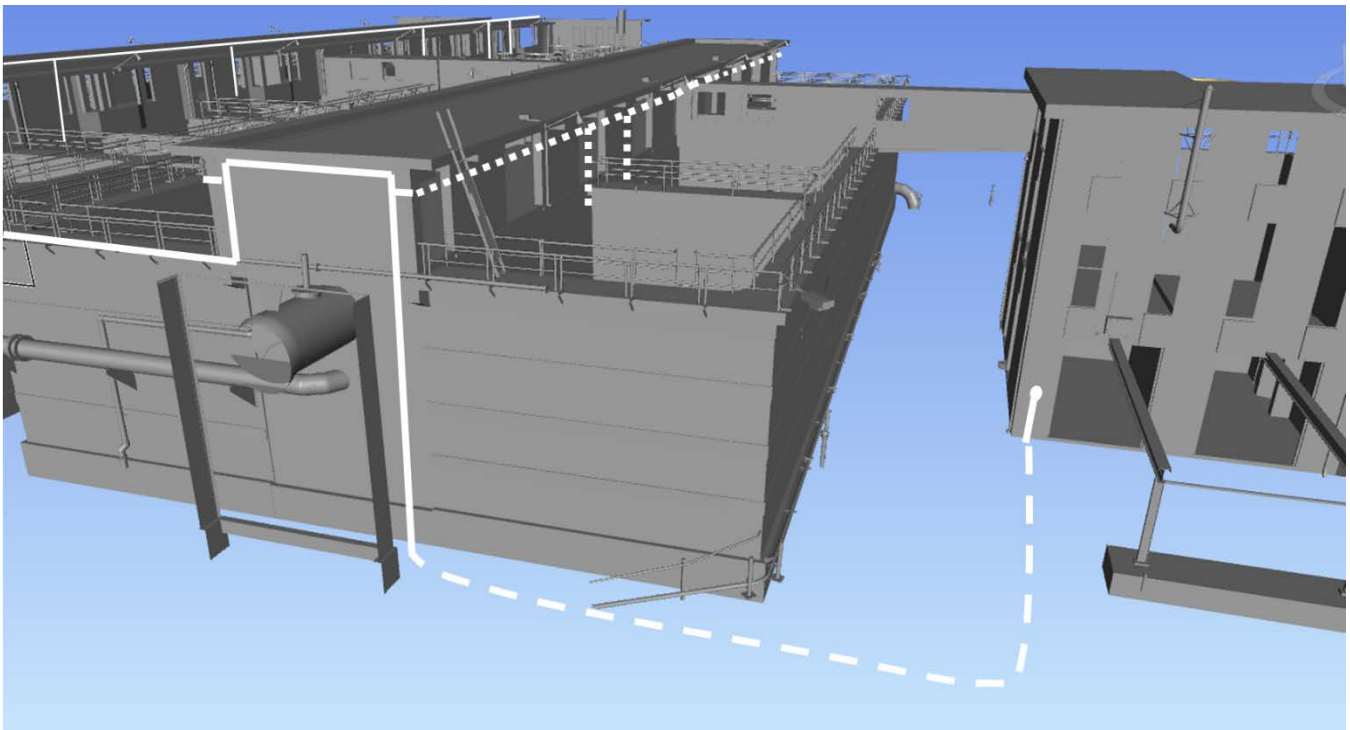

Figure 9. Option 5 Air Scour Pipework Alignment

PREFERRED OPTION – OPTION 4

Option 4 is the preferred option for the alignment between the chemical building and the filter beds. All of the pipework will be exposed allowing for easy maintenance. There are no points for condensate to build up. Some noise insulating pipe wrapping could be necessary to reduce the noise and heat expelled from the pipework. The thickness of the pipe spanning the chemical building and the filter beds may need to be increased to be able to be self-supporting. This is to be confirmed during detailed design.

BLOWER ROOM LAYOUT

The air blower units are to be installed in a disused room in the chemical storage building. An air blower unit has been selected for the purposes of sizing the air blower room. The preliminary air blower selection was based on the target air scour rate (60 m/h) and estimated head loss through the pipework. The blowers are fully enclosed positive displacement blowers with inlet and outlet silencers. The selection of the air blower units will be confirmed once the pipe alignment and total headloss has been finalized, and the layout will be such to accommodate selections from multiple blower manufacturers.

From an initial site layout, both the duty and standby air blower units will be able to fit in the existing building with enough room to open both the maintenance panels and wheel a trolley between the units. Some building modifications will be required in order to meet noise standards. This includes:

- Replacing the existing door and windows with acoustic fresh air louvres
- Replacing the existing chain link gate with acoustic doors
- Install a thermostat controlled ventilation fan
- Might need to noise insulate the inside of the building

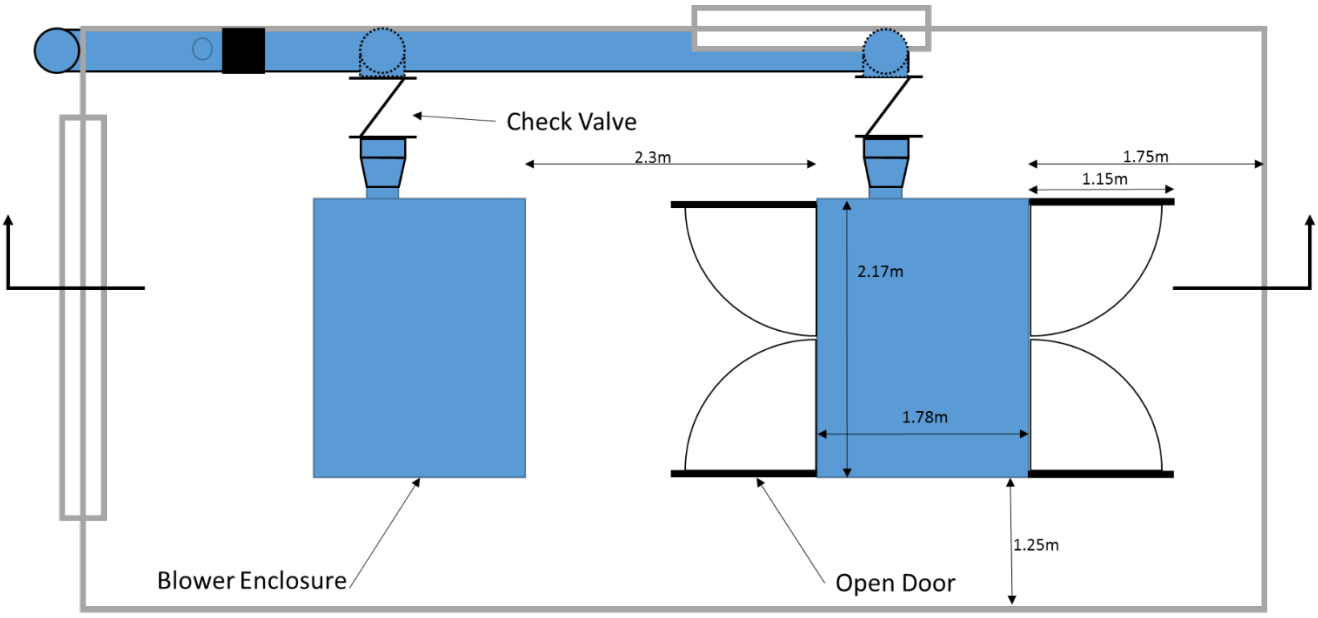

Figure 10. Air Blower Room Layout

Due to the height and weight of the blower units, the existing gantry can only lift and maneuver ancillary parts. The gantry will be used to drop parts on a trolley. If needed to ensure fully sealing acoustic doors for effective noise control the outside section of the gantry beam can be removed.

The existing lighting within the building may need to be upgraded.

The existing air and gas cylinders and associated pipework will need to be relocated to the adjacent room.

There is insufficient space within the room for the electrical switchboard and RIO units. These will need to be located within the adjacent disused chlorine drum room.

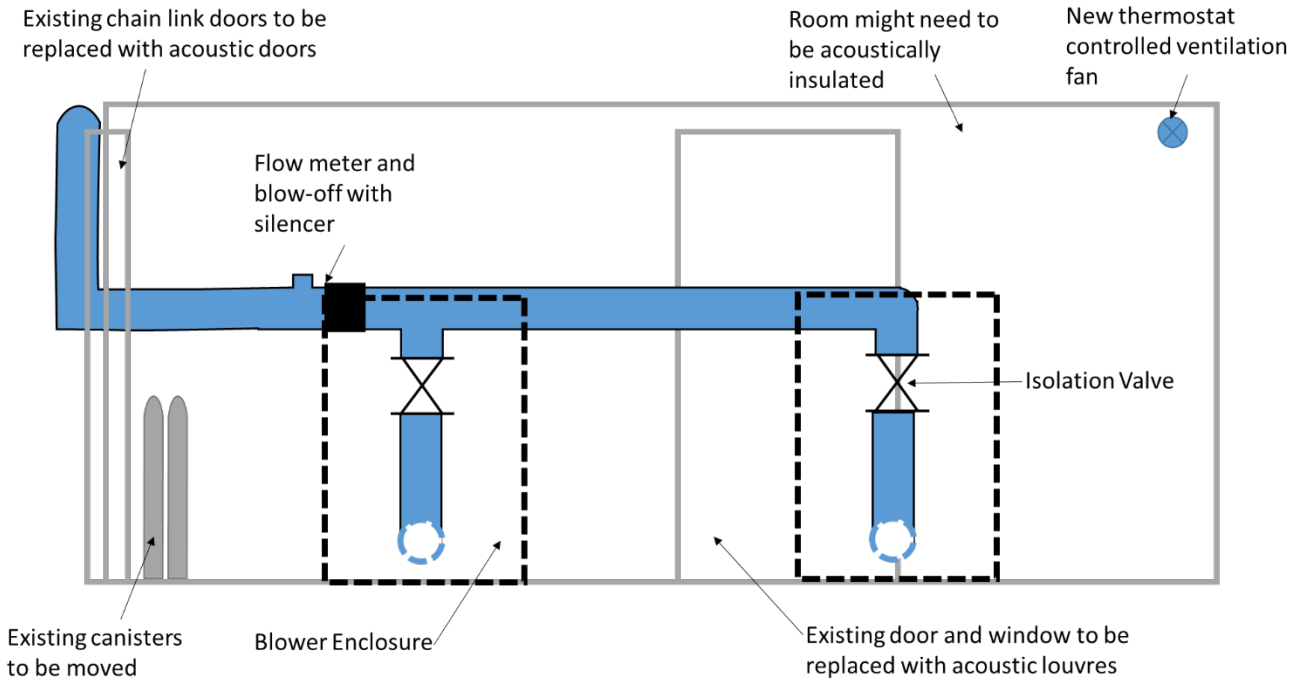

Figure 11. Air Blower Room Section

PREFERRED LAYOUT

Figure 12 illustrates the full proposed layout for the air scour pipework including the locations of the distribution header pipework to each of the filter beds.

A full loop system is essential on both filter buildings to ensure security of supply in the event of a planned or unplanned outage of the air scour system. A loop system enables the continued use of all other filters during maintenance.

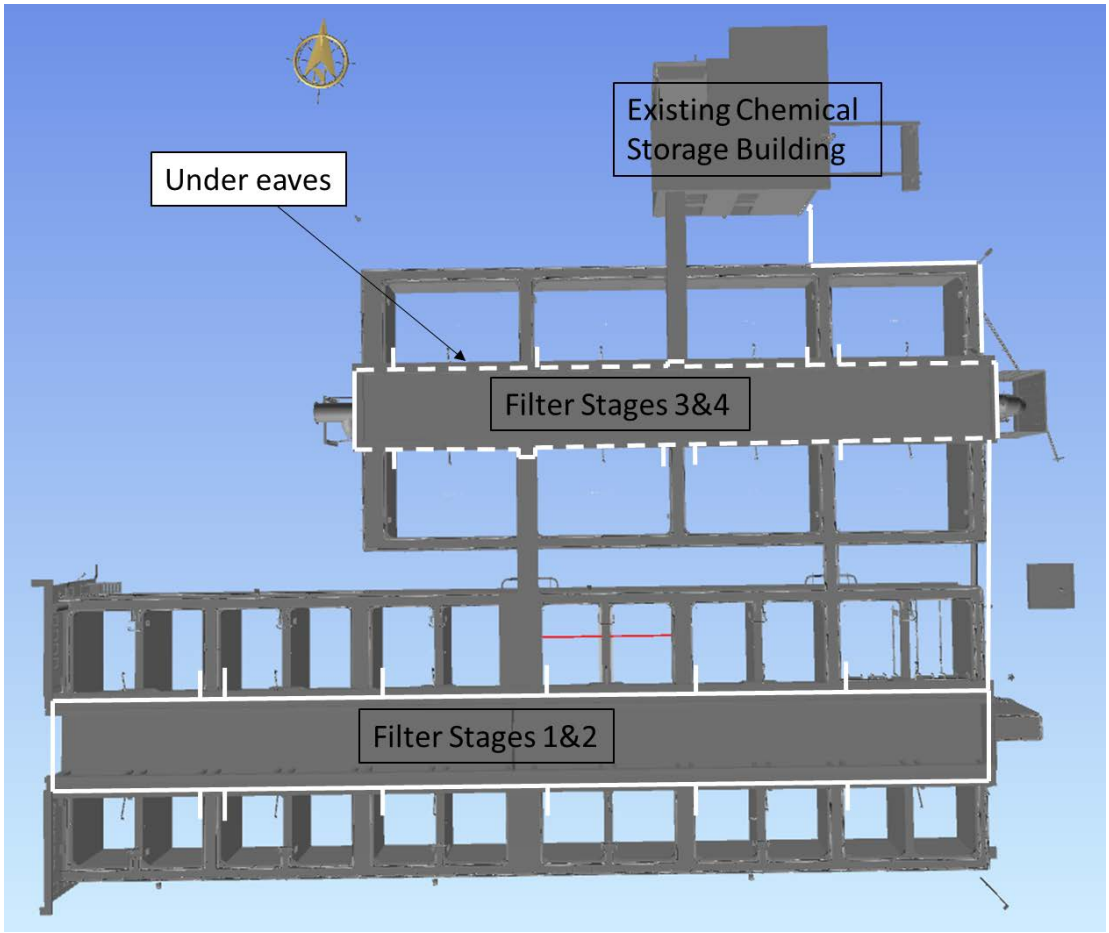

Figure 12. Preferred Air Scour Header Pipe Alignment

Technical Memo

Project:	**Mt Crosby East Bank WTP Filter Refurbishment**	*Project Code:*	83504178
Date:	19/02/2018	*Memo No.:*	9
To:	Bart Vervetjes, Seqwater		
From:	Steve Moore		
Subject:	**Construction Phasing Plan**		

Rev. No.	Date	Description	Prepared By	Checked By	Reviewed By	Approved By
1	16/02/2108	Draft for Client	IH	SM	SM	SM

• INTRODUCTION

The Mt Crosby East Bank Water Treatment Plant (WTP) treats 70% of the water servicing the greater Brisbane region in Southeast Queensland. The plants treats a maximum of 650 ML/day with all of their 20 filters in operation. The ongoing operation of the plant is therefore critical to the region's water supply and any partial plant outages must be timed carefully to ensure the plant is able to keep up with water demand.

Stantec has been engaged by Seqwater to provide engineering design services for the filter refurbishment works at the Mt Crosby East Bank WTP—a project that includes:

- Replacement of the filter inlet gates
- Required filter structural modifications
- Installation of a new underdrain system and new outlet launders
- Replacement of the filter media
- Replacement of the backwash header piping
- Installation of a new air scours system
- Automated backwash controls upgrade

This technical memorandum will outline the high-level construction tasks required as part of this project, and provide commentary on the sequence of construction, taking into account the need to maintain continuous plant operation during the construction period.

• GATE REPLACEMENT

The first step in the construction sequence will be replacement of the existing filter inlet gates in Stages 1 and 2. The existing inlet gates can be upwards of 70 years old, and show signs of leakage. As such, installation of the new gates is required as a means of isolating the filters from the settled water channel to perform the rest of the refurbishment tasks. Installation of the new filter inlet gates will require the settled water channel to be isolated and drained. This process will take 12 filters offline at once, resulting in a 60% reduction in plant capacity.

Installation of the inlet gates can be performed in two phases:

- Phase 1: Drilling of core holes for the gate stems, installation of the frames and gates
- Phase 2: Installation of the actuator pedestals and actuators, provision of power supply, gate commissioning.

The plant outage mentioned above (12 filters out of service) is only required during phase one of this task. The remainder of the work can be done with the existing gates in service. Further information regarding the inlet gate replacement can be found in Technical Memorandum 06.

Supply and installation of the gates is being procured independently of the main contract works for the filter refurbishment, and is planned to occur during the general plant shutdown in June 2017

• INSTALLATION OF PLC 013

The existing filters are controlled through a series of PLCs (PLCs 041 through 045 - one per set of four filters) with common controls functions spread across the 5 PLCs. This arrangement will be replaced with a single PLC (PLC 013) with remote I/O cabinets where required. The filter PLCs will be replaced progressively as part of the full filter refurbishment, meaning there will be an extended period of time where some filters are controlled by the new PLC system while others remain on the existing PLCs. During this period, intermediate control system changes will be required to maintain operation of the common functions across all filters.

PLC 013 will need to be installed prior to the filter refurbishment work, where the existing PLCs are taken offline one by one. Some changes to existing PLCs 041 to 045 will be made in advance to transfer common control functionality from the existing PLCs to PLC 013. Furthermore, data interchange between PLC 013 and the existing PLCs will need to be established, so the new PLC can communicate with the existing system during the construction period. The following steps for the controls cutover include shall be implemented prior to the filter refurbishment works (PLC 041-045 change overs):

- Install new PLC 013 – place cabinet in control room and install all RIO panels, apart from those that will replace PLCs 041 to 045.
- Transfer common indications and alarms to PLC 013.
- Transfer interlocks between the high level reservoir pump controls and the filter controls (existing PLC 008 and PLC 042 – 045) to PLC 013.
- Establish data transfer from PLC 013 to the existing PLCs for backwash header flow control valves H145-C and H147-C.
- Transfer control of backwash header flow control valves H145-C and H147-C to PLC 013. Transfer of these valve controls will be done one at a time.
- Establish data transfer from PLC 013 to the existing PLCs. Analog signals for cascade flow control setpoint and digital signals for backwash permit (drain down to balance tank) sent from PLC 013 to all existing filter PLCs.
- Transfer settled water channel level transmitters to PLC 013
- Transfer backwash balance tank level transmitters to PLC 013
- Transfer clear water cell level control and plant outlet valves (H238 and H337) to PLC 013

• AIR SCOUR INSTALLATION

The next task in the sequence is installation of the two air scour blowers and necessary air scour header pipework. The blower units are to be installed in the disused chemical storage building – some structural modifications to the building may be required prior to facilitate the installation of the blowers including replacing doors, providing acoustic louvres, noise insulation and lighting upgrades. More information about the blower room and air scour piping layout can be found in Technical Memorandum 07.

The blowers and air scour system shall be fully commissioned before the filter upgrade work begins, as running the air scour system will be necessary to commissioning the refurbished filters. Commissioning of the blower and air scours system will also involve a controls changeover for PLC8, which houses the controls for the existing backwash pumps.

• CLEAR WATER CELL REHABILITATION

At Mt Crosby East Bank, filtered water is collected in the filtered water manifolds at the bottom of the filters and then collected in the clear water cells (CWCs) below. There are two CWCs in Stages 1 & 2 – one below filters 1-6 and a second below filters 7-8. These two CWCs are currently hydraulically connected, however, an isolation valve will be provided and installed prior to the commencement of this project.

As part of this project, the CWCs in stages 1 and 2 will be re-coated and any required structural rehabilitation as a result of the inspections will be performed. Additional structural work in the CWCs may be required to support the new filter floor (which may involve cutting penetrations into the existing filtered water manifold). This will be confirmed once the underdrain system is procured, further information about the underdrain system can be found in Technical Memorandum 05. If modifications are needed to support the filter floor, work in the CWCs must finish before the installation of the underdrains in the filters above can begin. If structural work in

the CWCs is not required based on the actual underdrain system that is procured, then the re-coating and rehabilitation of the CWC can be done concurrently with the filter refurbishment.

• FILTER REFURBISHMENT

The filter refurbishment works will be done in in sets of four filters at a time. This is necessary, as the existing control system is set up with one PLC per four filters. The sub-tasks of the filter refurbishment work include:

- Demolition of the existing launder and underdrains
- Concrete rehabilitation and structural works (including new launder installation)
- Installation and hydraulic testing of the new underdrain system
- Addition of the filter media
- New PLC installation and controls changeover
- Filter commissioning

As mentioned above, the filter refurbishment work will be performed following the upgrades to the clear water cells below. This presents a challenge for the filter 5-8 refurbishment work, as this set of four filters sits above two CWCs. To expedite the overall construction schedule and minimize the number of filters offline at any given time, the refurbishment work in filters 7-8 will begin first (during the upgrade to the filters 7-12 CWC). Once work in filters 7-12 CWC is complete and filters 9-12 are put back in service, refurbishment work in filters 5 and 6 can begin.

• BACKWASH MAIN REPLACEMENT

Replacement of the existing DN600 backwash header in stages 1 and 2 will also be performed during the construction program for this project. The backwash pipework is currently configured in a ring main around all four filter stages. There are existing isolation valves on the backwash header to isolate Stage 1&2 and Stage 3&4. Work on the backwash header will be performed concurrently with the filter refurbishment work (four filters at a time) in order to minimize the number of filters offline. This task can be broken up into two phases:

- Backwash Header Isolation – install temporary thrust restraint and close the upstream and downstream isolation valves long enough to install a new isolation valve between the bank of four filters. 12 filters will be offline during the isolating valve installation

- Backwash Header Replacement – with the backwash line for a bank of four filters isolated, the existing line can be demolished and the new pipe installed up to the mating flange on the new valve.

When portions of the backwash line are isolated, it no longer functions as a ring main. All backwash flow will travel in one direction through the line, which increases the headloss in the pipe and decreases the available backwash flow. Consequently, during this construction, the refurbished filters will be operating at a reduced backwash flow. It is not recommended to runt eh refurbished filters at this reduced backwash flow for sustained lengths of time (>1 month). It is therefore required for the backwash main to be operated asa ring main using both backwash control valves, once each section of backwash header is replaced. The risk associated with the backwash header replacement, especially for filters 5- 12 which take place once new filters have been commissioned, must be managed carefully to ensure operation of the new filters is not affected, by prolonged reduced backwash rates.

For the refurbishment of filters 3&4 the washwater line will need to be modified to remove the existing surface wash connections. At the time of the filter refurbishment, the surface wash isolation valves to those filters can be closed and a blind flange installed at the surface wash connection, leaving the line to service other filters. Ultimately, the surface wash piping, shown in Figure 1, can be demolished. This work will be independent of the filter stages 3&4 refurbishment.

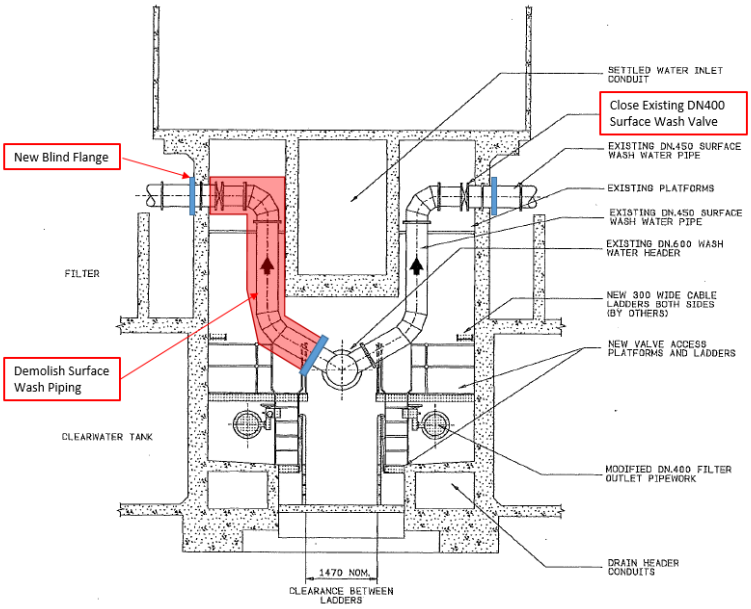

Figure 1 Surface Wash Pipe Demolition

- ## SEQUENCE OF CONSTRUCTION

The construction tasks listed above were incorporated into a construction schedule using Microsoft Project. Appendix A shows a Gantt chart of the construction tasks, with those on the critical path highlighted in red. The filters that will be out of service during a given task are listed to the right of each task bar. The overall construction duration is approximately 18 months.

Appendix B gives a visual representation of the sequence of construction tasks overlaid on a general filter schematic. Areas of the plant that are affected or out of service during a given construction task have been highlighted in yellow. Each construction phase includes the number of filters out of service (OOS)for that activity

Appendix A: Construction Sequence Schedule

ID	Task Mode	Task Name	Duration	Predecessors	Resource Names
1		Inlet Gate Installation	2 wks		1,2,3,4,5,6,7,8,9,1
2		PLC 013 Installation and common control changeover	4 wks		
3		Blower Room Structural Modifications	2 wks	1	
4		Air Scour Blower Installation	4 wks	3	
5		PLC 8 Changeover	2 wks	4FF,2	
6		Blower Comissioning	1 wk	4,5	
7		Clear Water Cell (1-6) modification	6 wks	6	1,2,3,4,5,6
8		Filter 1-4 Refurbishment	12 wks	7SS	1,2,3,4
9		Backwash Header 1-4 Isolation	2 days	7SS	1,2,3,4,5,6,7,8,9,1
10		Backwash Header 1-4 Replacement	1 wk	9	1,2,3,4
11		PLC 41 Changeover	2 wks	8FF,7SS	1,2,3,4
12		Filter 1-4 Comissioning	2 wks	8,10,11	1,2,3,4
13		Clear Water Cell (7-12) Modifications	6 wks	12	7,8,9,10,11,12
14		Filter 7&8 Refurbishment	6 wks	13SS	7,8
15		Filter 5&6 Refurbishment	6 wks	13	5,6
16		Backwash Header 5-8 Isolation	2 days	13	5,6,7,8,9,10,11,12
17		Backwash Header 5-8 Replacement	1 wk	16	5,6,7,8
18		PLC 42 Changeover	2 wks	14FF,15FF,13	5,6,7,8
19		Filter 5-8 Comissioning	2 wks	14,15,17,18	5,6,7,8
20		Filter 9-12 Refurbishment	12 wks	19	9,10,11,12
21		Backwash Header 9-12 Isolation	2 days	19	9,10,11,12
22		Backwash Header 9-12 Replacement	1 wk	21	9,10,11,12
23		PLC 43 Changeover	2 wks	20FF,19	9,10,11,12
24		Filter 9-12 Comissioning	2 wks	20,22,23	9,10,11,12
25		Filter 13-16 Refurbishment	12 wks	24	13,14,15,16
26		PLC 44 changeover	2 wks	24,25FF	13,14,15,16
27		Filter 13-16 Comissioning	2 wks	25,26	13,14,15,16
28		Filter 17-20 Refurbishment	12 wks	27	17,18,19,20
29		PLC 45 Changeover	2 wks	27,28FF	17,18,19,20
30		Filter 17-20 Comissioning	2 wks	28,29	17,18,19,20
31		Backwash Header 13-20 Modification	2 wks	24	13,14,15,16,17,18

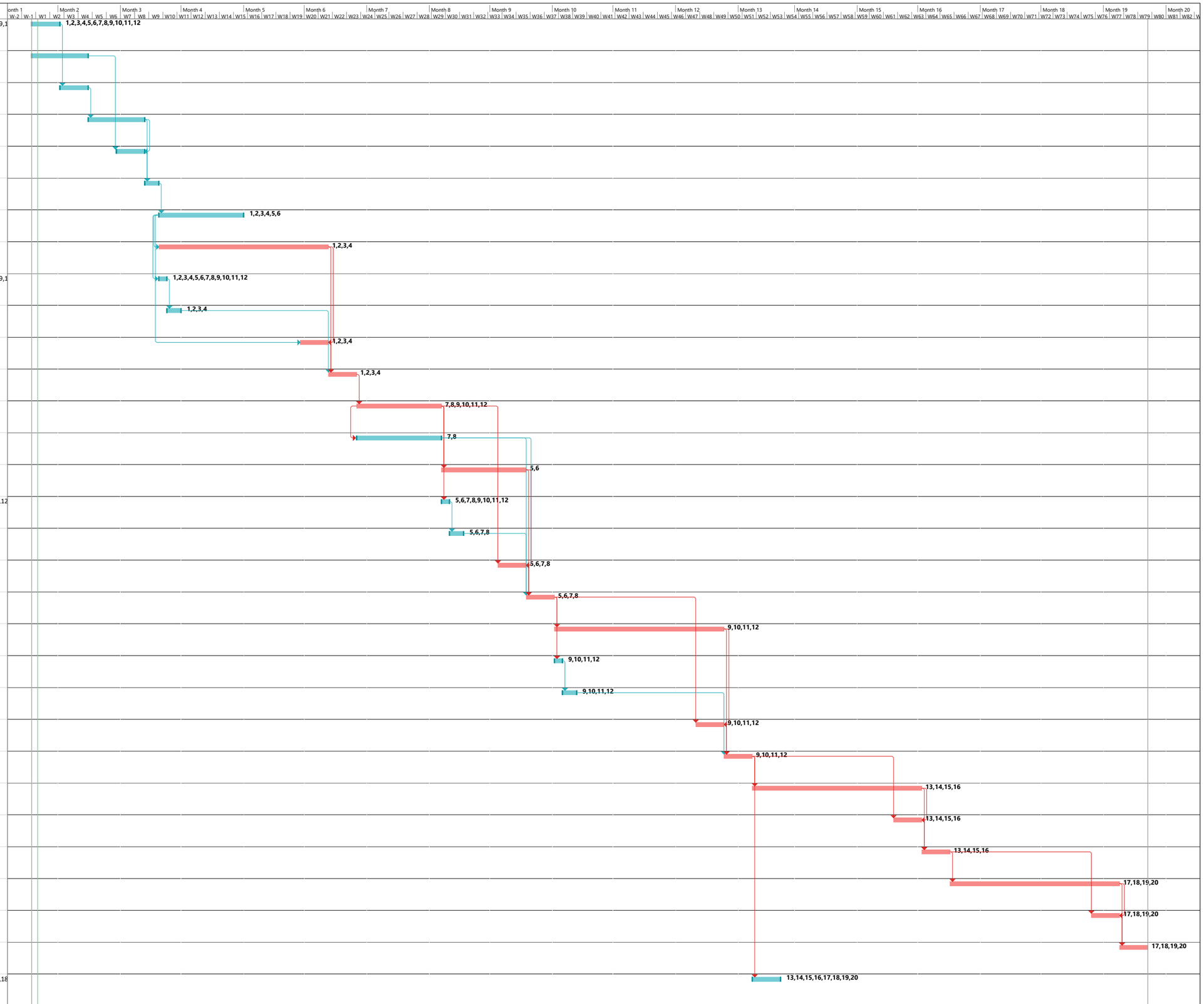

Project: Construction Schedule
Date: Mon 2/19/18

Task | Split | Milestone | Summary | Project Summary | Inactive Task | Inactive Milestone | Inactive Summary | Manual Task | Duration-only | Manual Summary Rollup | Manual Summary | Start-only | Finish-only | External Tasks | External Milestone | Deadline | Critical | Critical Split | Progress | Manual Progress

Appendix B: Construction Sequence Staging

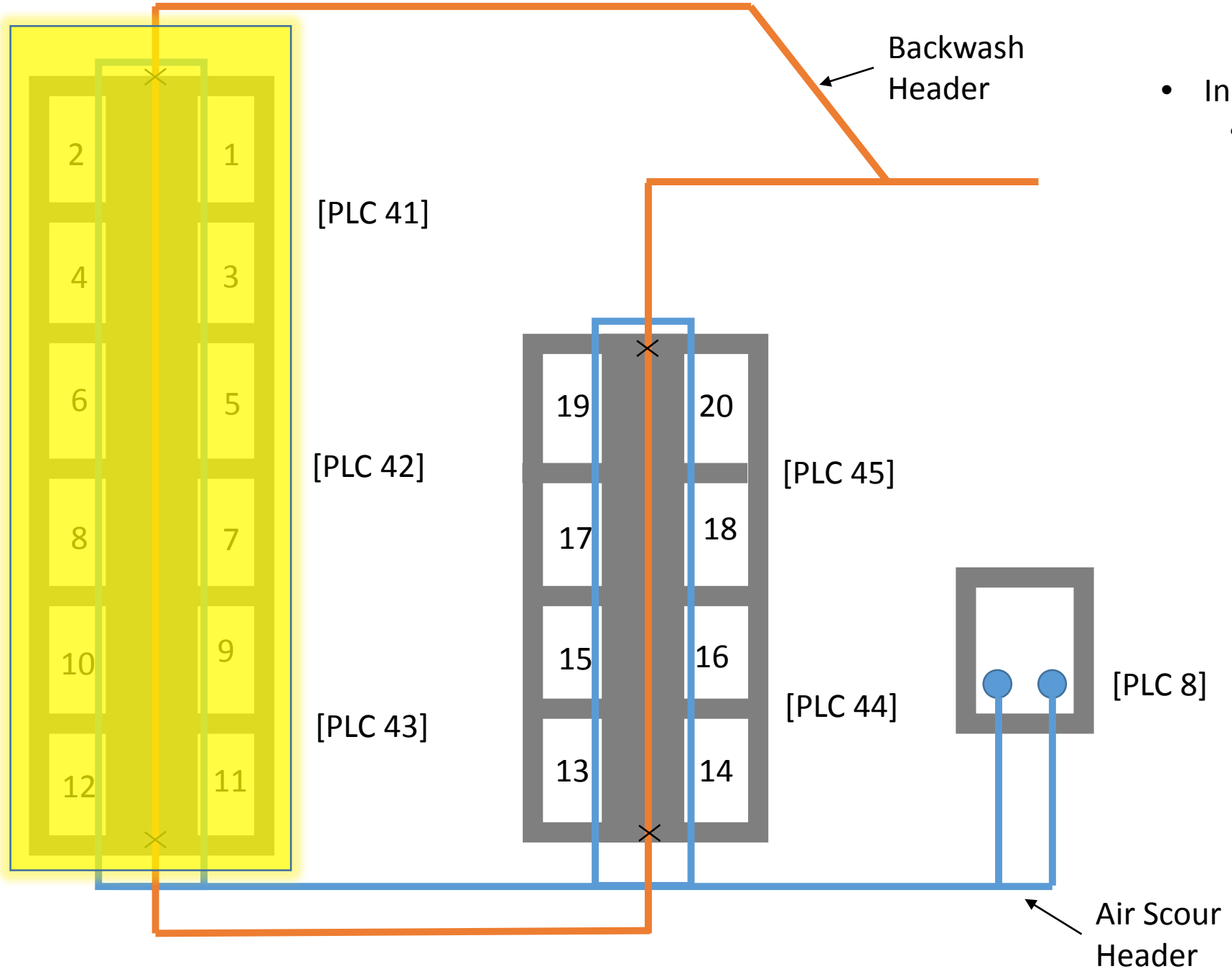

- Inlet Gate Installation
  - 12 Filters OOS

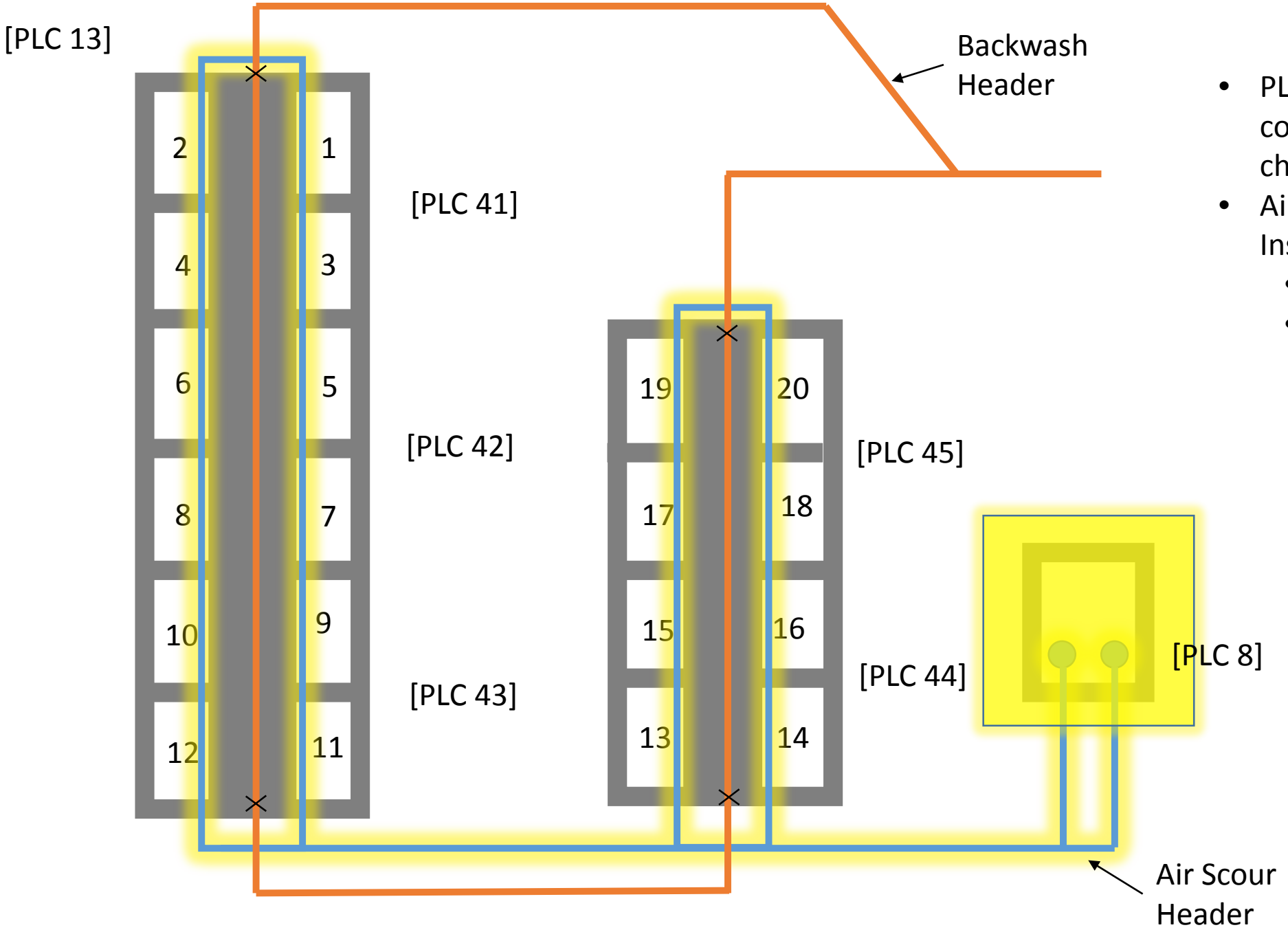

- PLC 13 Installation and common control changeover
- Air Scour and Blower Installation
  - PLC8 Changeover
  - Commissioning

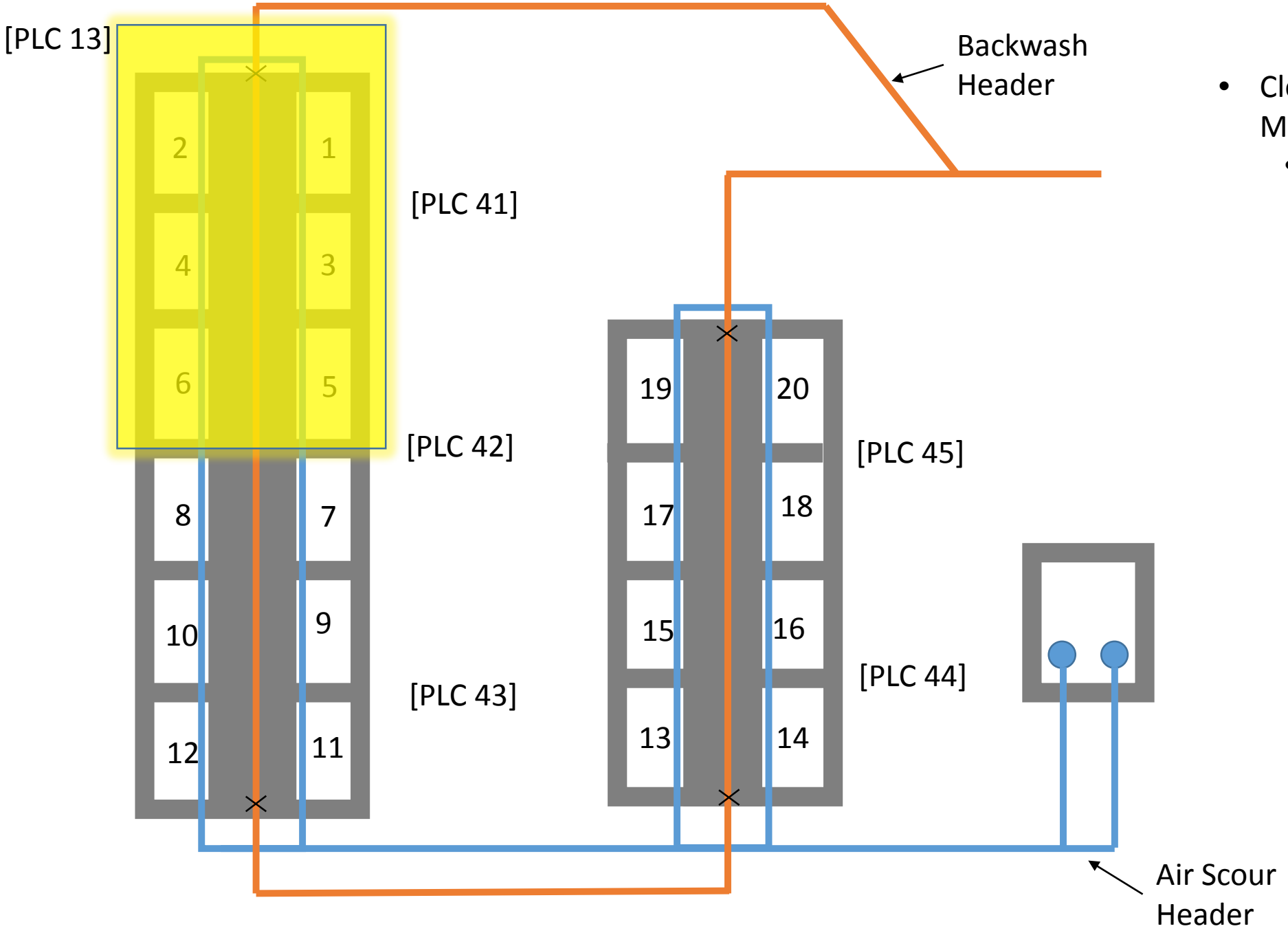

- Clear Water Cell 1-6 Modifications
  - 6 Filters OOS

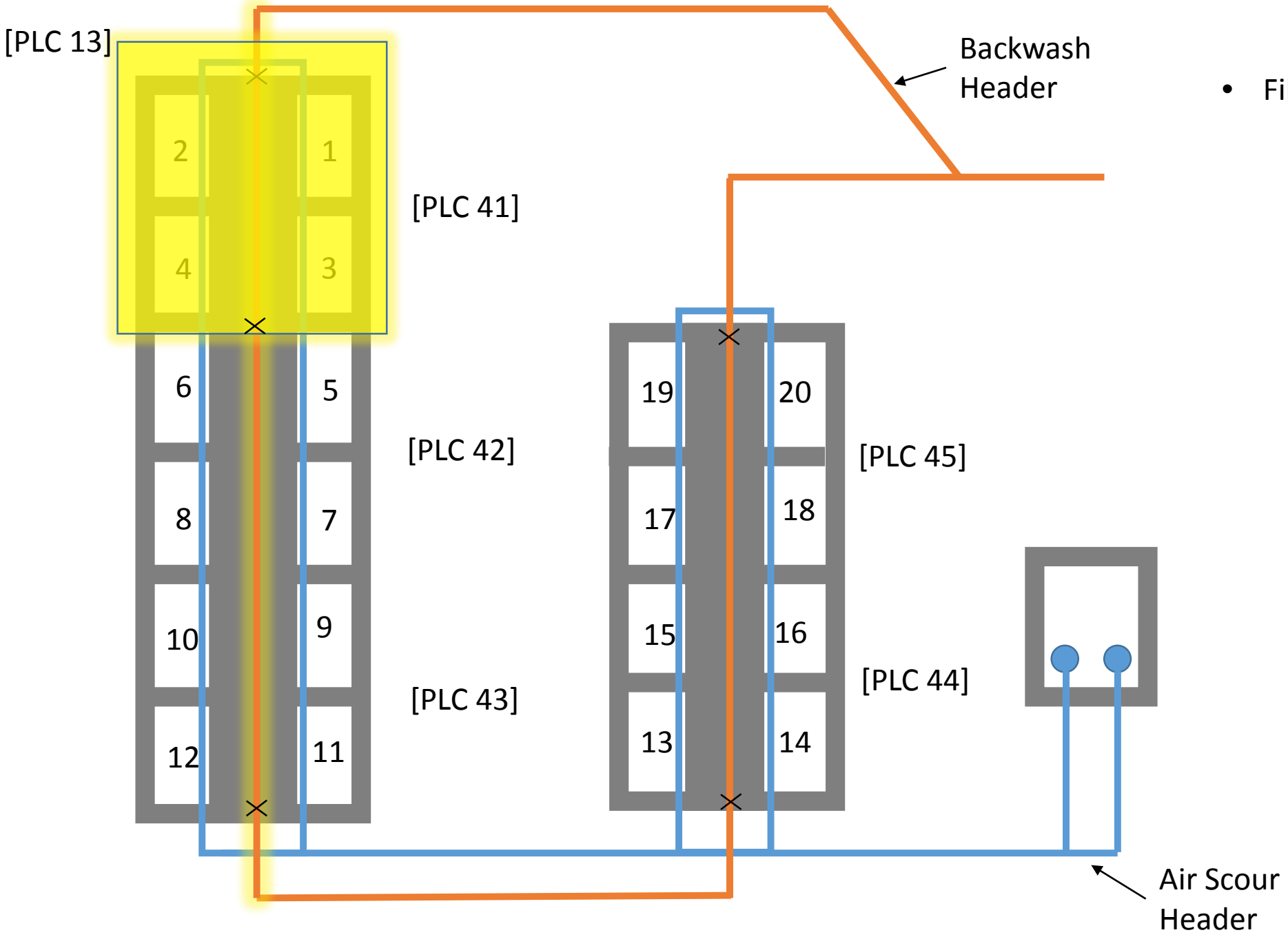

- Filter 1-4 Refurbishment
  - Backwash header 1-4 replacement
  - PLC41 Changeover
  - 4 Filters OOS

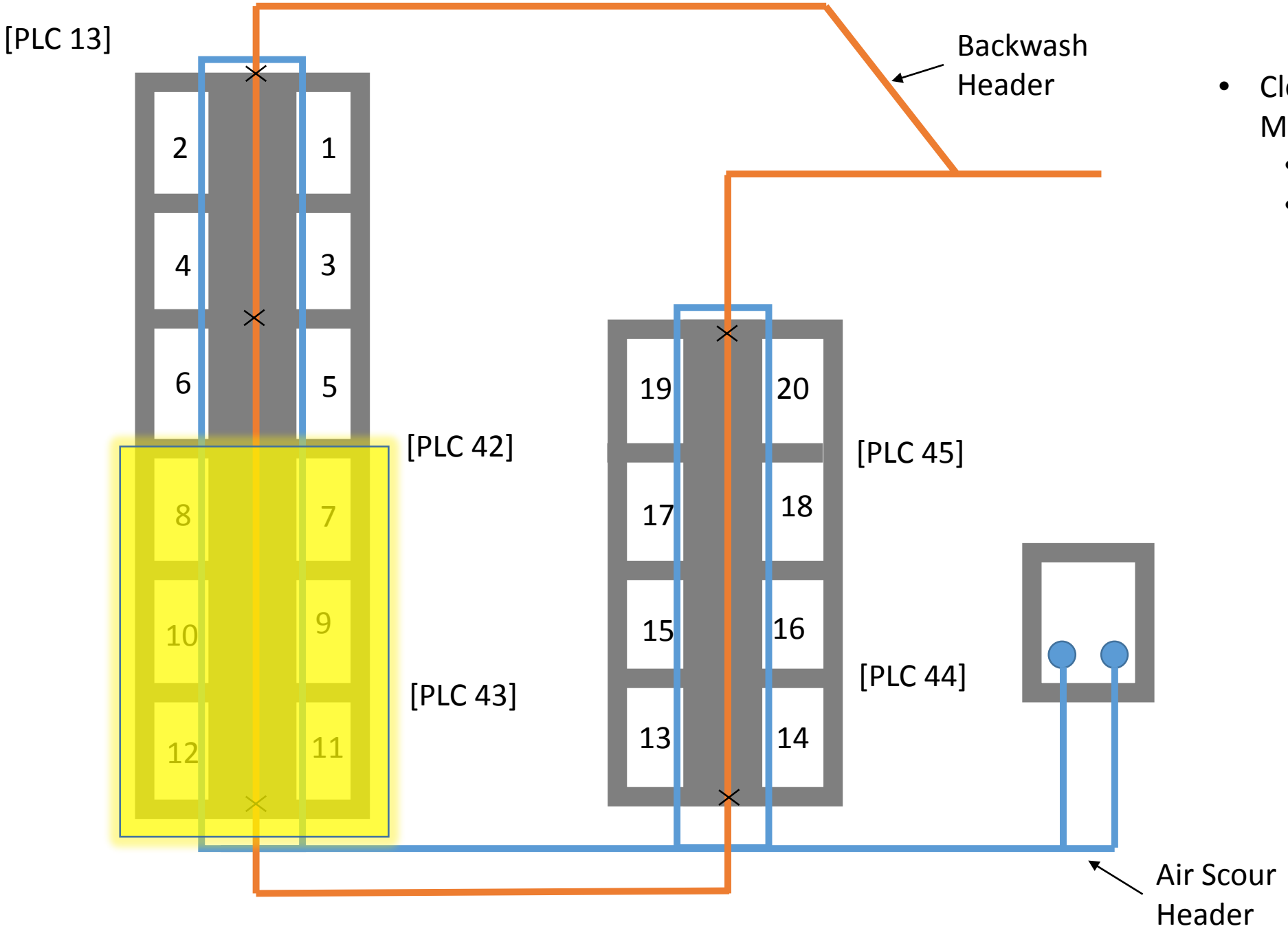

- Clear Water Cell 7-12 Modifications
  - 6 Filters OOS
  - Begin Filter 7-8 refurbishment

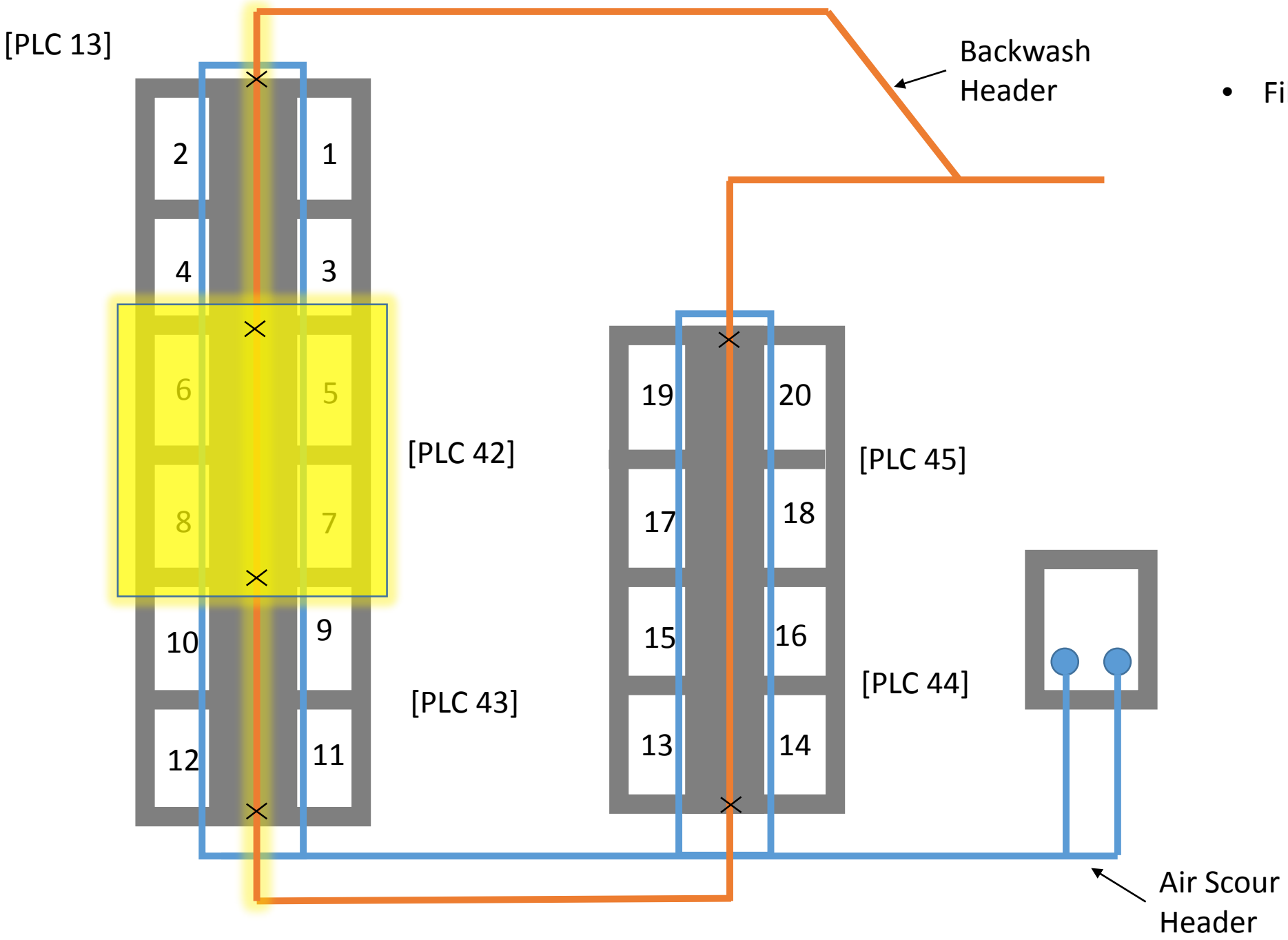

- Filter 5-8 Refurbishment
  - Filter 5&6 Refurbishment
  - Backwash header 5-8 Replacement
  - PLC42 Changeover
  - 4 Filters OOS

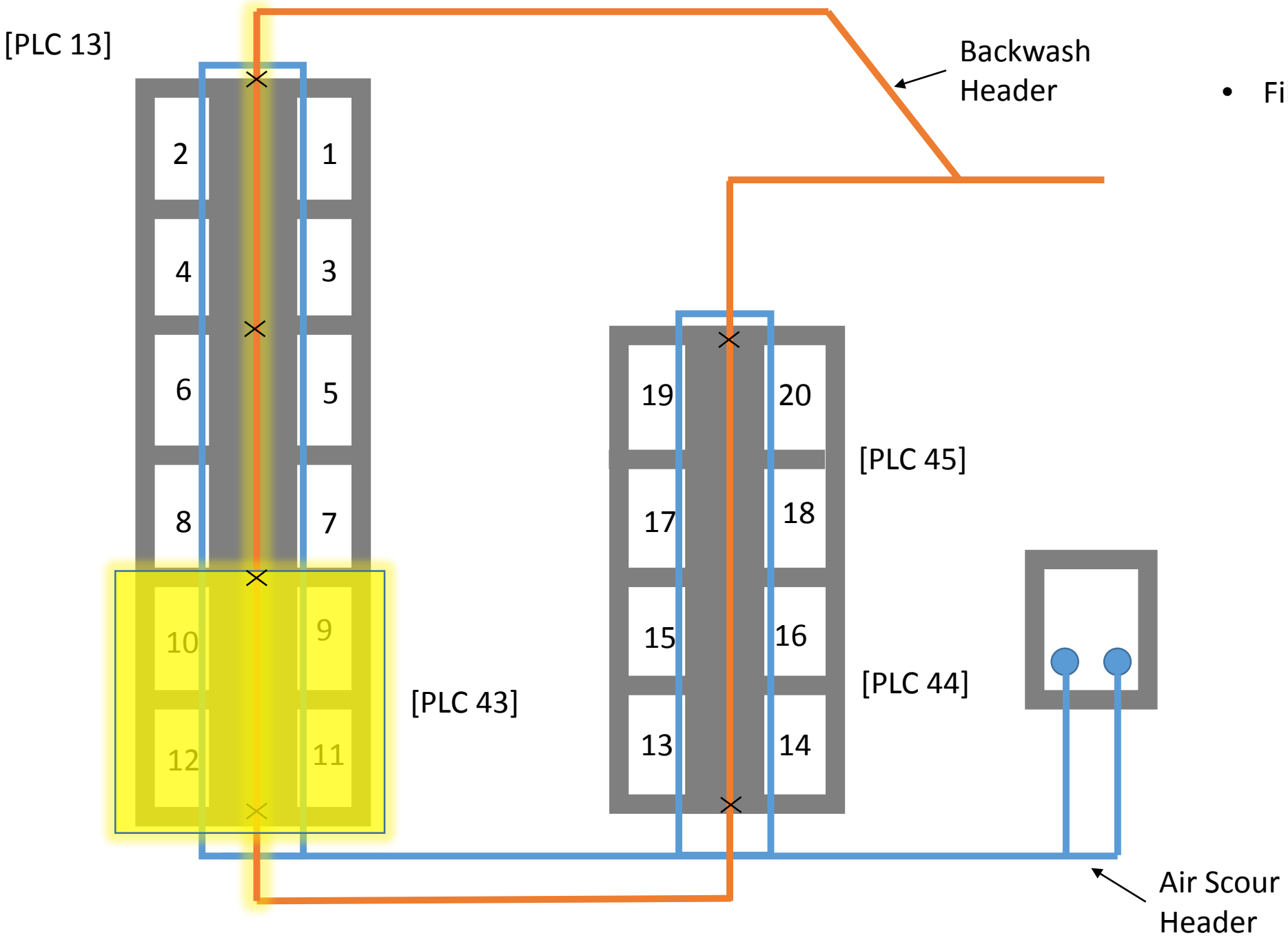

- Filter 9-12 Refurbishment
  - Backwash header 9-12 Replacement
  - PLC43 Changeover
  - 4 Filters OOS

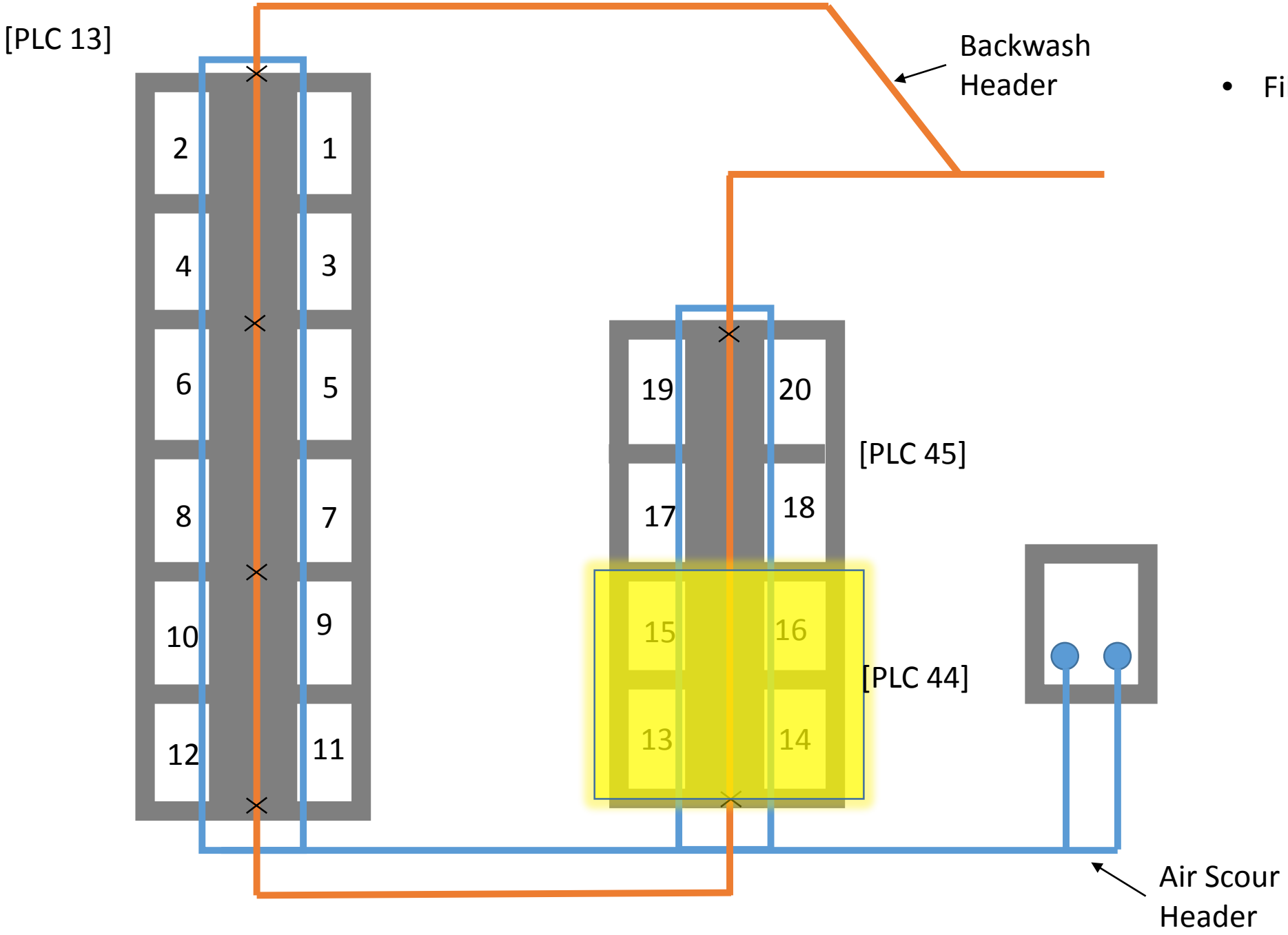

- Filter 13-16 Refurbishment
  - PLC44 Changeover
  - 4 Filters OOS

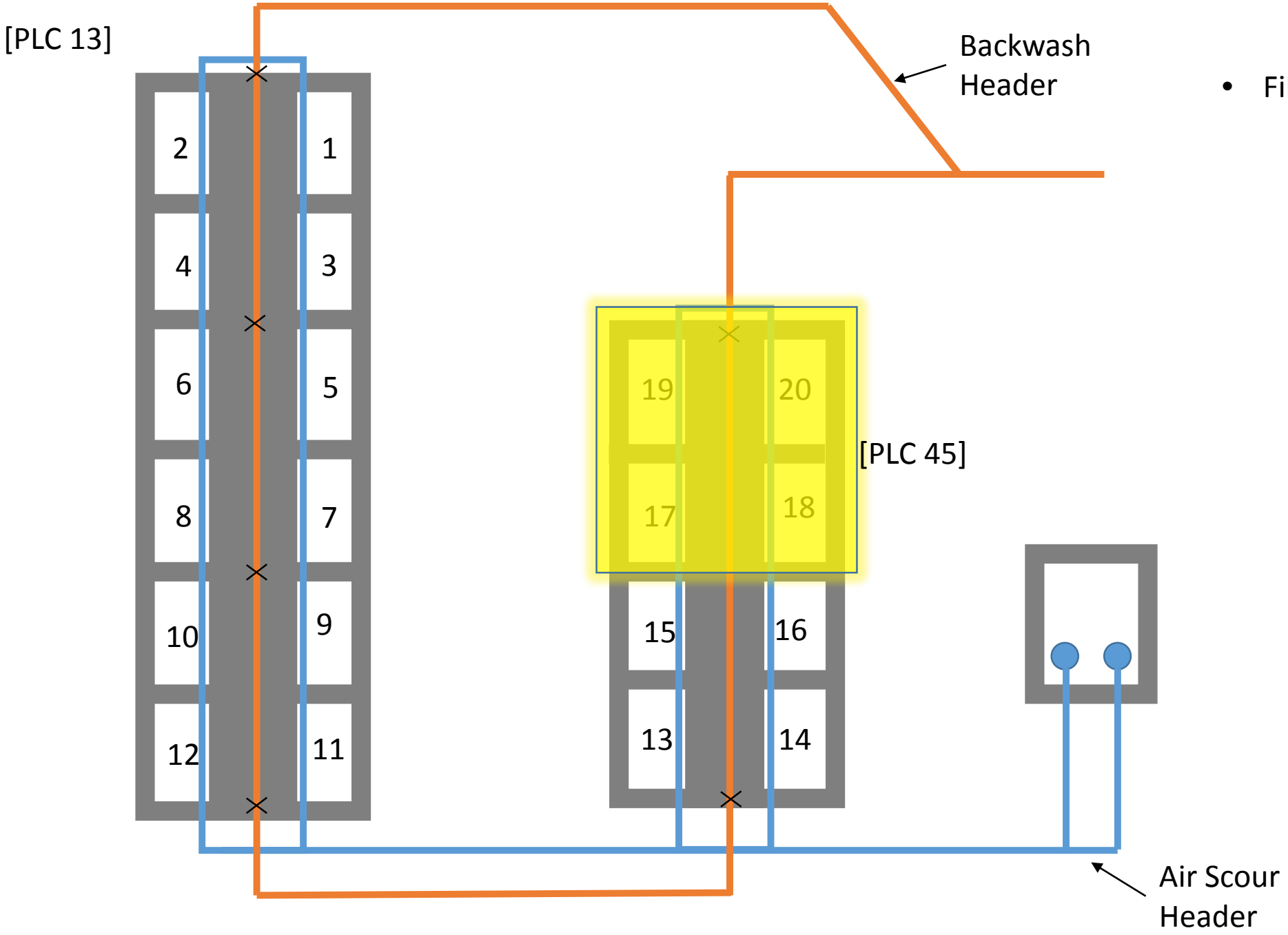

- Filter 17-20 Refurbishment
  - Filter 5&6 Refurbishment
  - PLC45 Changeover
  - 4 Filters OOS

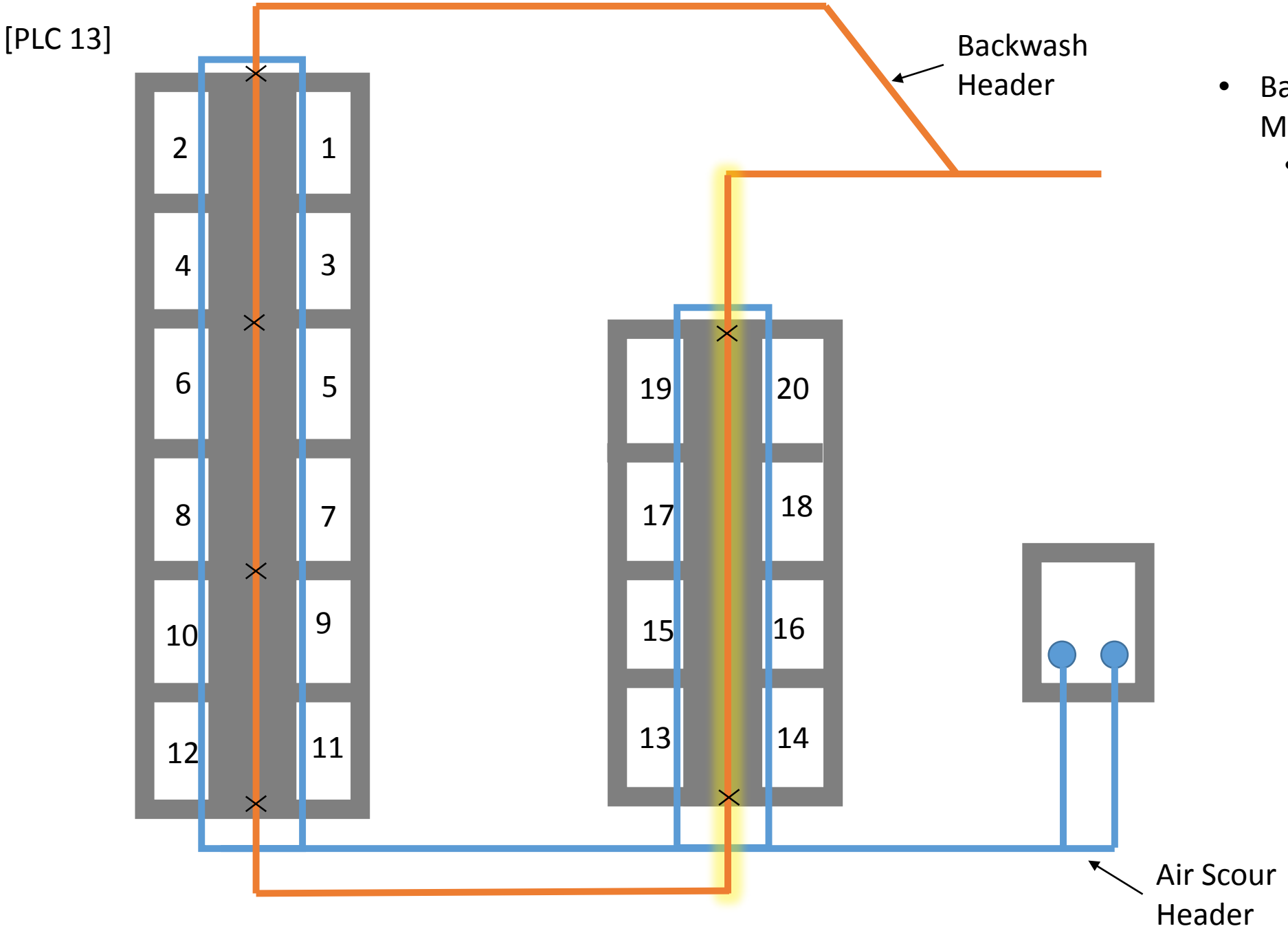

- Backwash Header 13-20 Modification
  - 8 Filters OOS

Technical Memo

Project:	**Mt Crosby East Bank WTP Filter Refurbishment**	*Project Code:*	83504178
Date:	20/3/18	*Memo No.:*	11
To:	Bart Vervetjes, Seqwater		
From:	Steve Moore		
Subject:	**Structural Assessment of Existing Works**		

Rev. No.	Date	Description	Prepared By	Checked By	Reviewed By	Approved By
1	20/3/18	Draft for Client	Bonacci	SM	SM	SM

• INTRODUCTION

The Mt Crosby East Bank Water Treatment Plant (WTP) treats 70% of the water servicing the greater Brisbane region in Southeast Queensland. The plants treats a maximum of 650 ML/day with all of their 20 filters in operation. The ongoing operation of the plant is therefore critical to the region's water supply and any partial plant outages must be timed carefully to ensure the plant is able to keep up with water demand.

Stantec has been engaged by Seqwater to provide engineering design services for the filter refurbishment works at the Mt Crosby East Bank WTP—a project that includes:

- Replacement of the filter inlet gates
- Required filter structural modifications
- Installation of a new underdrain system and new outlet launders
- Replacement of the filter media
- Replacement of the backwash header piping
- Installation of a new air scours system
- Automated backwash controls upgrade

Stantec has engaged Bonnaci Infrastructure to undertake a structural assessment of the existing filter cells and clear water cells, to consider potential structural works as part of the project. This technical memorandum summarises the determinations of that assessment as detailed in Bonnaci Infrastructure Report : *Mt Crosby East bank Filter upgrade: Structural Assessment of Existing Plant Upgrade*. Full report included.

The assessment considers the following potential works items:

1. Raising of the filter inlet gullet wall approximately 600mm
2. Potential removal of the filter floor strip enclosing the filtered water outlet gullet. This is potentially a requirement to accommodate reconfiguration of the filter underdrain outlets
3. Requirement to construct personnel access openings into the Stage 1 and 2 Clear Water Cells

• STRUCTURAL ASSESSMENT OF EXISITNG FILTERS AND CLEAR WATER CELLS

Finite element analysis of the upgrade requirements to the Mt Crosby East Bank Water Treatment Facility Filtration Cells was carried out in combination with the design drawings available to determine the structural adequacy and serviceability of the existing structure. Results of the assessment are summarised below.

6.1 Gullet Wall Extension and Washwater Trough Tie

The Gullet Wall extension was analysed without the presence of the washwater troughs. Without the washwater troughs acting as tie beams to the top of the wall, the moment at the base of the wall increases by a factor of 2. The increase in moment results in reinforcement stresses marginally exceeding limits stated in AS3735 (Concrete Structures Retaining Liquids) 146Mpa as opposed to existing maximum stress of 138MPa. Therefore, as part of the trough redesign a component of 'tie' action is required to support the gullet wall to

maintain watertightness and durability at the base of the wall in accordance with AS3735. Refer to Drawing B4352-S04 for concept design details of the Gullet Wall extension.

6.2 Filter Floor Cut-Out

Removal of a central strip of the existing filter floor over the manifold was investigated to facilitate and alternative underdrain system. Based on the significance of the slab continuity over the manifold to the slab performance, maintaining slab column strips through the manifold were deemed necessary to minimise the negative impact on the entire slab. Additional carbon fibre fabric wrap is required over cut areas of the slab to manifold interface to eliminate excessive crack widths that would compromise watertightness and durability. Refer to Drawing B4352-S05 for concept design details of the Filter Floor cut-out.

Should the configuration of the underdrain outlet system require a complete removal of the gullet floor, then strengthening other filter floor slab would be required. This could be achieved with carbon fibre sheeting of the underside of the floor (roof of the clear water cell). Carbon fibre sheeting needs to be consider concrete remedial works and either substrate preparation and application of concrete rehabilitation coatings. An outcome is considered possible to allow for full removal of the gullet floor section if the underdrain configuration requires this.

6.3 Access Hatch's to Stages 1 and 2

The Clear water cell walls were analysed to identify the lowest stressed sections of the structure walls to facilitate construction of the openings. An opening of nominal size 1200x1000 has been assessed. The access openings in the side wall of the four filtered water cells under Stage 1 and 2 filters were located purposefully to reduce the impact on the existing wall design. Based on the results of the analysis carried out the existing wall maintains sufficient residual capacity exists to support the opening without compromising durability or any strengthening requirements. The opening can be sealed with a steel plate fixed with anchors into the wall. No additional concrete portal is required for local strengthening of the wall.

Refer to Drawing B4352-S05 for details of the access opening size and cover plate details.

• CONCLUSION

The proposed structural works for the project do not present any significant concerns or complications in achieving a suitable efficient design to accommodate the required filter refurbishment. Once the underdrain system supplier is selected and outlet configuration confirmed structural amendments for the works can proceed

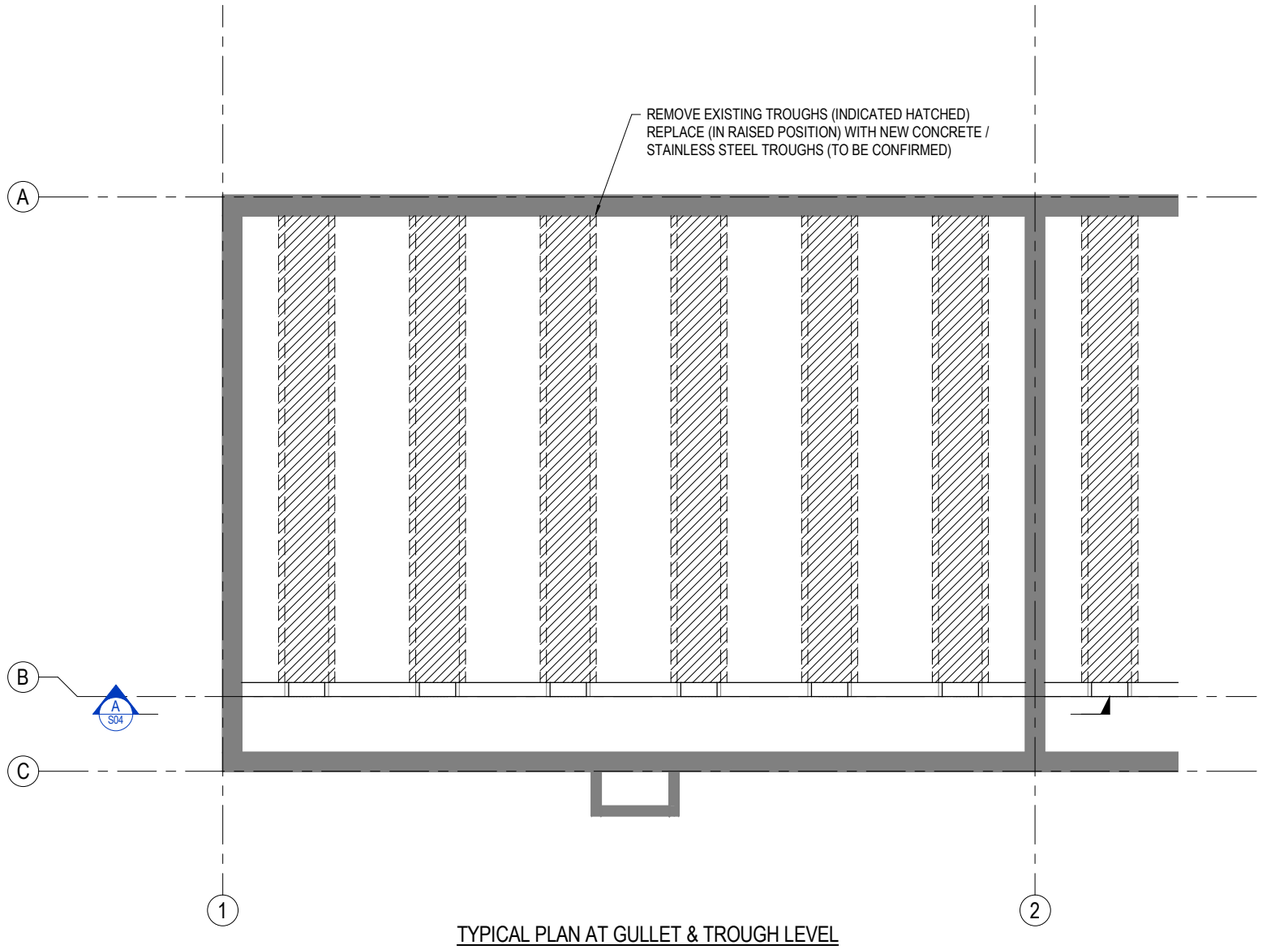

TYPICAL PLAN AT GULLET & TROUGH LEVEL

SCALE 1 : 50

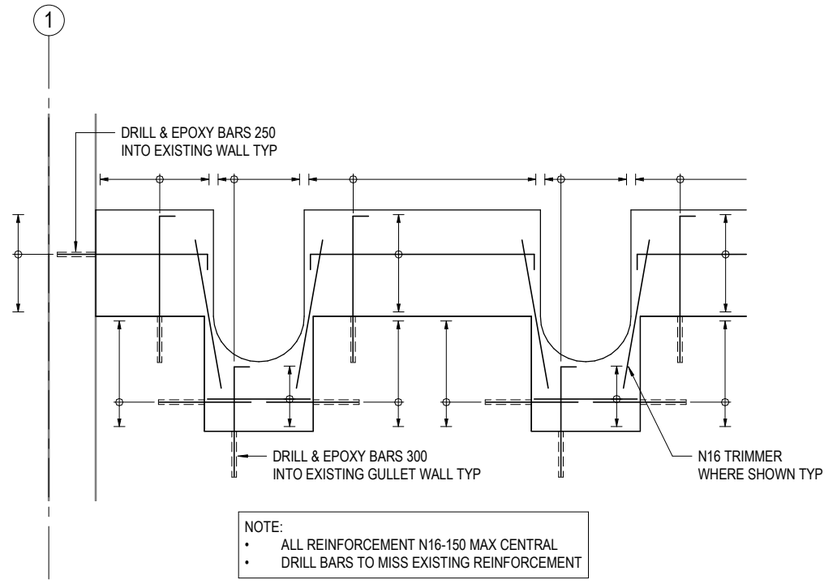

NOTE:
- ALL REINFORCEMENT N16-150 MAX CENTRAL
- DRILL BARS TO MISS EXISTING REINFORCEMENT

TYPICAL ELEVATION
GULLET WALL REINFORCEMENT

SCALE 1 : 20

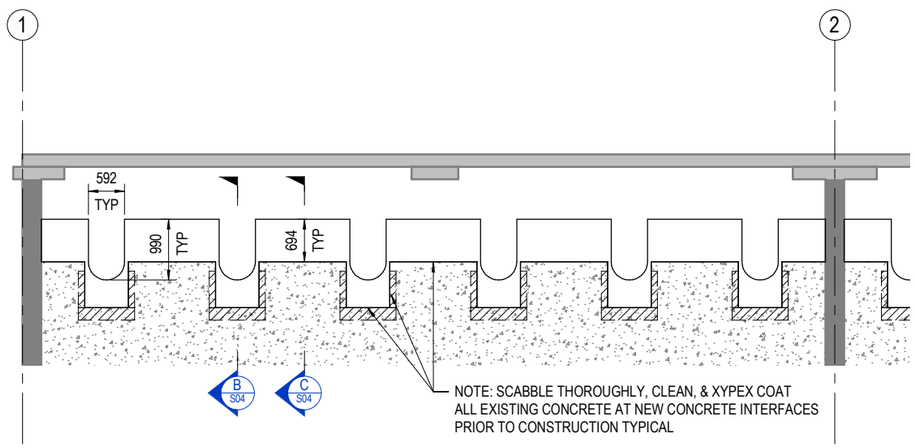

SECTION A S04

SCALE 1 : 50

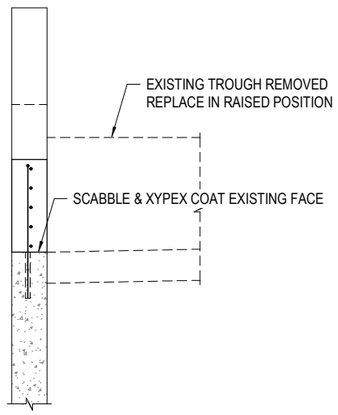

SECTION B S04

SCALE 1 : 20

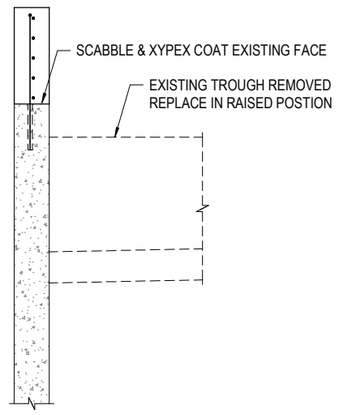

SECTION C S04

SCALE 1 : 20

COPYRIGHT All rights reserved.
These drawings, plans and specifications and the copyright therein are the property of Bonacci Infrastructure and must not be used, reproduced or copied wholly or in part without the written permission of Bonacci Infrastructure.

Issue	Revision	Date	By	App.
P1	REPORT ISSUE	05.03.18	MG	DH

Issue Revision Date By App.

Issue Revision Date By App.

BONACCI INFRASTRUCTURE
Bonacci Infrastructure
ABN 72 010 964 664
Engineered Solutions: Structural and Civil Design
10 Finchley Street (PO Box 1299) Milton Queensland 4064 Australia
Tel : +61 7 3510 7222 Web Site : www.bon-infra.com

Project
MOUNT CROSBY
FILTER TANK UPGRADE

Drawing Title
TYPICAL MODIFICATION DETAILS
GULLET AND WASHWATER TROUGH
LEVEL

CONCEPT DESIGN

Designed SH	Project Director Approved	Date	North
Drawn MG			
Scale AS SHOWN	Project Ref	Drawing No	Issue
Date 27.02.18	B4352	S04	P1

Plotted on: 5/03/2018 2:53:06 PM

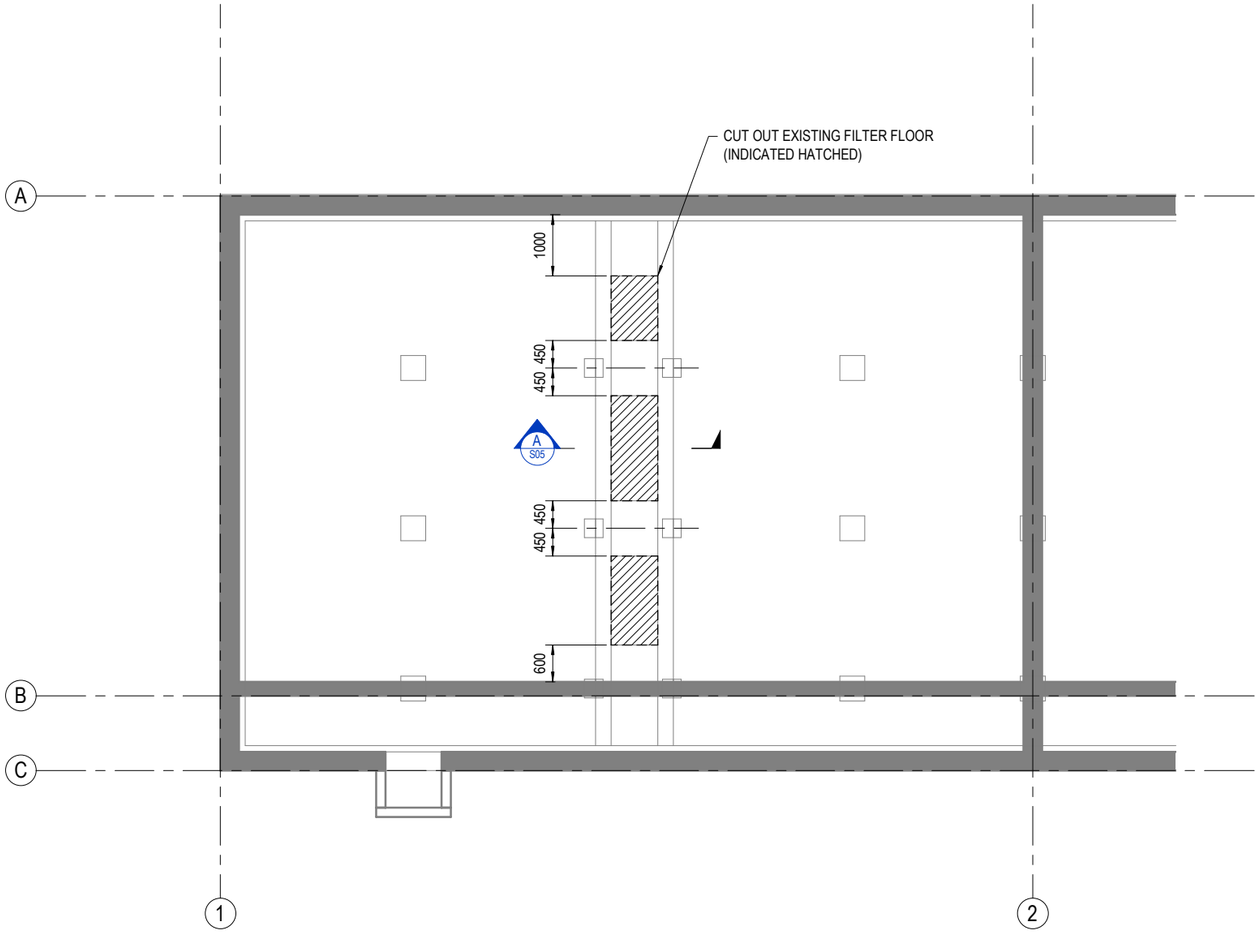

TYPICAL PLAN AT FILTER FLOOR LEVEL

SCALE 1 : 50

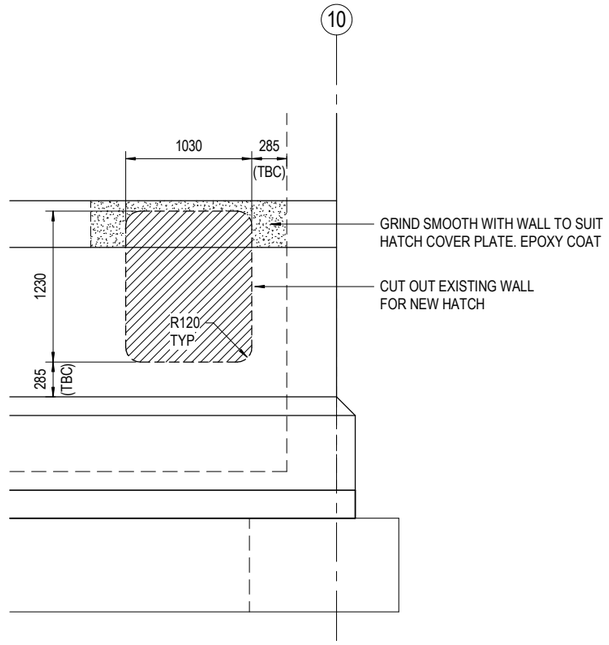

NOTE:

- (TBC) DENOTES DIMENSION SUBJECT TO EXISTING REINFORCEMENT LOCATIONS

TYPICAL ELEVATION AT NEW HATCH

SCALE 1 : 25

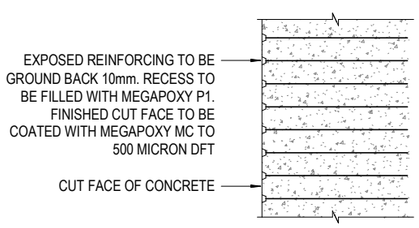

TYPICAL SLAB / WALL CUT BACK DETAIL

SCALE 1 : 20

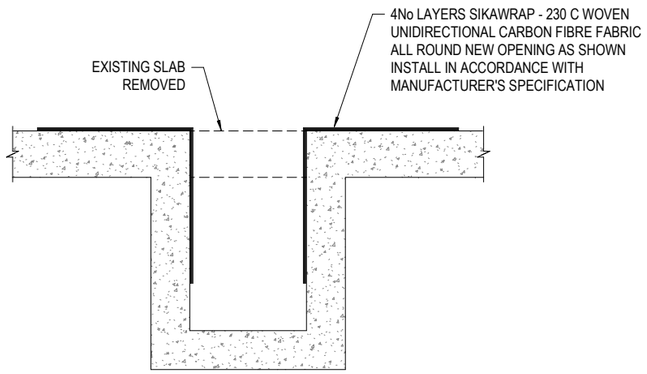

SECTION A S05

SCALE 1 : 20

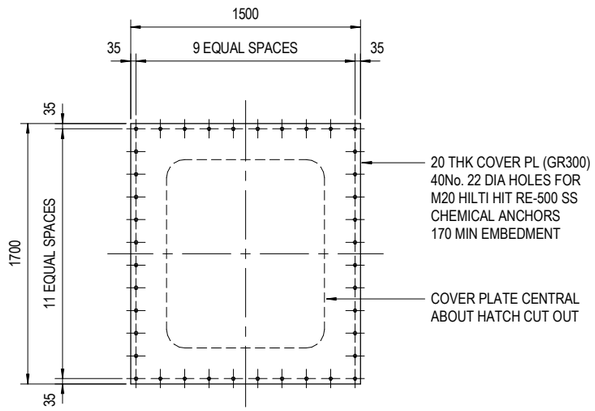

NOTE:

- COVER PLATE REQUIRED OUTSIDE FACE ONLY
- PROVIDE WATER PROOF GASKET BETWEEN PLATE & FILTER WALL (BY OTHERS)
- LOCATE EXISTING REINFORCEMENT PRIOR TO DETAILED DESIGN. FIXINGS TO AVOID REINFORCEMENT

TYPICAL HATCH COVER PLATE DETAIL

SCALE 1 : 20

COPYRIGHT All rights reserved.
These drawings, plans and specifications and the copyright therein are the property of Bonacci Infrastructure and must not be used, reproduced or copied wholly or in part without the written permission of Bonacci Infrastructure.

Issue	Revision	Date	By	App.
P1	REPORT ISSUE	05.03.18	MG	DH

BONACCI INFRASTRUCTURE
Bonacci Infrastructure
ABN 72 010 964 664
Engineered Solutions: Structural and Civil Design
10 Finchley Street (PO Box 1299) Milton Queensland 4064 Australia
Tel : +61 7 3510 7222 Web Site : www.bon-infra.com

Project
MOUNT CROSBY
FILTER TANK UPGRADE
Drawing Title
TYPICAL MODIFICATION DETAILS
FILTER FLOOR LEVEL

CONCEPT DESIGN

Designed	SH	Project Director Approved	Date	North
Drawn	MG			
Scale	AS SHOWN	Project Ref	Drawing No	Issue
Date	27.02.18	B4352	S05	P1

Plotted on: 5/03/2018 2:53:08 PM

Technical Memo

Project:	**Mt Crosby East Bank WTP Filter Refurbishment**	*Project Code:*	83504178
Date:	10/4/18	*Memo No.:*	12
To:	Bart Vervetjes, Seqwater		
From:	Steve Moore		
Subject:	**Concrete Remediation Assessment Report**		

Rev. No.	Date	Description	Prepared By	Checked By	Reviewed By	Approved By
1	22/4/18	Draft for Client	Bonacci	SM	SM	SM

• INTRODUCTION

The Mt Crosby East Bank Water Treatment Plant (WTP) treats 70% of the water servicing the greater Brisbane region in Southeast Queensland. The plants treats a maximum of 650 ML/day with all of their 20 filters in operation. The ongoing operation of the plant is therefore critical to the region's water supply and any partial plant outages must be timed carefully to ensure the plant is able to keep up with water demand.

Stantec has been engaged by Seqwater to provide engineering design services for the filter refurbishment works at the Mt Crosby East Bank WTP—a project that includes:

- Replacement of the filter inlet gates
- Required filter structural modifications and concrete remediation
- Installation of a new underdrain system and new outlet launders
- Replacement of the filter media
- Replacement of the backwash header piping
- Installation of a new air scours system
- Automated backwash controls upgrade

Stantec has engaged Bonnaci Infrastructure to undertake an assessment of appropriate concrete remediation solutions to address the existing degradation of the concrete in the Filter cells and Clear Water Cells so as to extend the useful life of the structures. This technical memorandum summarises the determinations of that assessment as detailed in Bonnaci Infrastructure Report : *Concrete Remediation Works*. Full report included in Appendix A.

The report has referenced previous investigations and remedial works already undertaken at the plant.

The assessment considers the following potential works items:

1. Potential ongoing long term structure degradation
2. Product selection and substrate preparation
3. UV resistance

• CONCRETE REMEDIATION ASSESSMENT CONCLUSINS AND RECOMMENDATIONS

The system chosen by Seqwater to repair the concrete surface of the Stages 3 and 4 clear water tanks is also appropriate for stages 1 and 2. Most importantly, the Epimax 225 Primer and mortar combination have proved the best suited to bonding to a substrate with a high proportion of exposed aggregate that is rounded. Given the relatively benign water contained in the tanks, a less expensive epoxy final coating may be considered in lieu of Epimax 333AR. Epimax 330 was suggested by Epimax as a suitable alternative as it is also potable water approved to AS4020 and compatible with the Epimax 225 mortar. The same system is recommended for the filters as these vessels have experienced the same damage and are also characterised by a surface proliferated with rounded exposed aggregate. It is also recommended that Epimax 330 be considered for use as the epoxy final coating as this material is less susceptible to discolouration and 'chalking' than Epimax 333AR when exposed to UV light. Note that the long term effectiveness of both barriers will not be affected by UV light, just the appearance.

The long term durability of the concrete structures can be assessed by various concrete testing, in particular the depth of carbonation. Reinforcement is generally resistant to corrosion due to the passivating effect of the high pH (pH> 11) of the concrete surround to the reinforcement. Carbonation of the concrete over time reduces the pH (pH7) which allows reinforcement corrosion to occur. The measured depth of carbonation can be used as an indicator of remaining design life before the reinforcement becomes subject to corrosion. Application of the proposed epoxy coating system will slow the rate of carbonation significantly, however if the concrete is in advanced stage of carbonation, the epoxy coating may be less effective in prolonging the structure design life.

It is recommended to undertake concrete testing to establish a baseline understanding of existing concrete carbonation. This would involve sampling of 4 cores (75mm dia) within a filter, and subjecting the cores to carbonation, pH and compressive strength testing. It would be possible for the coring and reinstatement to be undertaken in 12hours, to allow for the selective filter to be put back on line.

Mt Crosby East Bank Filter Upgrade

Concrete Remediation Works

Mt Crosby, Queensland, Australia

Document No.: B4352-MEM-S-001-A

Prepared for
Stantec

Prepared by
Bonacci Infrastructure

Issue	Revision	Date	Author	Reviewer
Draft Issue	A	23.02.2018	D. Hoger	T. Memory

©Bonacci Infrastructure

TABLE OF CONTENTS

1 INTRODUCTION 3
2 REPORT LIMITATIONS 3
3 EXISTING SEQWATER REPORTS 3
4 CONCRETE DEGREDATION AND REPAIR FUNCTIONAL REQUIREMENTS 4
4.1 Concrete Degradation 4
4.2 Remediation Functions 5
5 SEQWATER SYSTEM TRIALS AND ALTERNATIVES 5
6 SPECIFIC TESTING 6
7 CONSTRUCTION INFORMATION 6
8 RECOMENDATIONS 7

©Bonacci Infrastructure

1 INTRODUCTION

The existing combined filtration and clear water tanks at the Mt Crosby East Bank water treatment plant are exhibiting degradation of the water containing concrete surface. SEQ Water have remediated the stage 3 and 4 clear water tanks in 2015 and 2016. A new project has now commenced to modify the filtration system and at the same time, remediate the remaining water exposed surfaces. Bonacci Infrastructure have been commissioned by Stantec to:

i. Review the existing Seqwater reports on concrete rehabilitation works
ii. Based on site observations, provide commentary on severity of concrete degradation, and functional requirements of a rehabilitation system
iii. Comment on the system trials undertaken by Seqwater and any systems considered applicable for the rehabilitation works which have not been previously considered.
iv. Comment as to whether specific testing of the in-situ concrete would better inform decisions with regard to selecting a rehabilitation system.
v. Liaise with likely product suppliers and provide commentary on any application requirements which may impact selection of a system.
vi. Provide recommendations as to acceptable rehabilitation systems

2 REPORT LIMITATIONS

Bonacci Infrastructure are consulting civil and structural engineers. The advice given in regard to repair systems is based on solutions that have the required mechanical properties for the task. We are not chemical engineers and therefore cannot comment specifically on the relative effectiveness of each suppliers' polymer barrier to resist the environmental conditions of each structure other than to confirm that the suppliers' technical data sheets state that the product is suitable.

3 EXISTING SEQWATER REPORTS

The following reports have been reviewed as part of this technical memorandum:

1. Report No. 4040613-01 dated 30th June 2015 by Freyssinet Australia, "Concrete Protection System Product Trials and Investigation, Mt Crosby Eastbank Water Treatment Plant Low Level Filters, Concrete investigation and concrete protection system trialling works to filter structures"
2. Report No. 252364 Rev 2 dated 31st October 2016 by Aurecon, "Mt Crosby Eastbank WTP Clearwater Tank Repairs, Project Completion Report"

©Bonacci Infrastructure

4 CONCRETE DEGREDATION AND REPAIR FUNCTIONAL REQUIREMENTS

4.1 Concrete Degradation

Dan Hoger from Bonacci Infrastructure attended the site with Steve Moore (Stantec), and Bart Vervetjes (Seqwater) on the 15th of January 2018. A visual inspection of the degradation was carried out from the walkway level above the filter bays. A backwash cycle was observed on filter number 20.

The most evident deterioration during the inspection was a loss of concrete paste leaving a surface matrix of exposed aggregate. The exposed aggregate appears to be quite rounded and smooth. This was also identified in the report by Freyssinet. The paste loss is due to a long term wet environment with a negative Langelier Saturation Index. The Langelier Index is a measure of whether the water is under saturated, oversaturated or in equilibrium with respect to calcium carbonate. Based on data provided by Seqwater, the index ranges between -0.5 and -1. A negative index indicates the water is under-saturated with calcium carbonate and therefore trying to rebalance itself by taking it from the concrete.

The mechanism for this loss is carbonic acid turning the calcium hydroxide in the concrete paste into calcium carbonate. Carbonic acid subsequently converts the calcium carbonate into calcium bicarbonate which is dissolved into the water and lost from the concrete face. While the ‘attack’ is clearly evident in all structures, they are all still serviceable after 50+ years of use hence the ‘attack’ is quite mild. However to repair and further extend the life of the structures, a surface barrier is required to prevent the attack.

The exterior (dry) faces of the concrete appear sound with no evidence of spalling. The mechanism for deterioration on these faces will be progressive carbonation of the concrete from the surface. Atmospheric CO_2 reacts with calcium hydroxide converting it to calcium carbonate (similar to the wet faces). Unlike the wet faces, the calcium carbonate is not further broken down so the concrete is not structurally weakened. However it does mean that concrete pH is lowered. This carbonation ‘front’ progresses toward the reinforcement over time and when the pH of the concrete near the reinforcing steel reduces to about 9, the passive protective layer around the reinforcement enabled by the alkaline concrete matrix breaks down. This eventually leads to rusting reinforcement and the gasses expelled during this process spalls the concrete. Spalling is not evident so it is likely that the reinforcement remains in an alkaline environment. However, given the age of the structures, it is worth investigating the carbonation depth to gain an understanding of how much life the structure has before the carbonation ‘front’ reaches the reinforcement steel. An anti-carbonation barrier would further extend the life of the structures and could be applied cost effectively provided it is carried out before carbonation reaches the steel.

©Bonacci Infrastructure

4.2 Remediation Functions

1. Confirm that the reinforcement steel remains in an alkaline environment of greater than pH9 after the repair
2. Remove unsound concrete from the face
3. Provide a smooth finished surface
4. In the filter chambers, the product must be resistant to UV light
5. In both chambers the, the repair product must have similar thermal expansion characteristics to concrete or, exhibit an elastic modulus low enough that differential movements are accommodated within the stress limits of the coating
6. The final barrier must be effective against weak carbonic acid

5 SEQWATER SYSTEM TRIALS AND ALTERNATIVES

As listed above, the primary functions of the repair are to remove the defective concrete surface, and to reinstate the surface with a barrier that will prevent further acid attack. The removal of the defective concrete surface is common to any repair, so the variable is the render that will provide a smooth even surface for the barrier and the barrier itself.

The typical options for the render are cementitious, epoxy or a hybrid of both. The barrier coat is typically an epoxy resin system. As such, the trials undertaken for Seqwater by Freyssinet cover the most likely scenarios for the tank repair. Given that the trials were carried out in the service environment for which they are intended, the results of this trial are more valuable than any other options which may be put forward. Unless trials of a similar nature are carried out the validity of other repair systems for the application would not be as reliable as the work that has already been done. On this basis, we would recommend that the findings of the Seqwater trials are appropriate for the selection of a treatment for the current remediation project.

The work carried out previously by Freyssinet compared field trials of the recommended repair products put forward by Parchem, BASF and Bluey. Key outcomes from the trials are:

1. Cementitious renders do not provide an adequate bond to a substrate that has a surface which is predominantly a smooth rounded aggregate. Abrasive grit blasting may improve the bond however the additional preparation would add cost and not necessarily improve the cementitious bond.
2. Epoxy primers and epoxy mortars provide the best bond characteristics to the substrate.
3. All epoxy final barriers adhered sufficiently to the render beneath.
4. The epoxy system by Bluey proved the most reliable for bond strength to the substrate and was the product ultimately chosen by Seqwater for the stage 3 and 4 clear water tanks.

©Bonacci Infrastructure

Based on the outcome of the previous testing, we would also recommend the epoxy system put forward by Bluey. We would however recommend that an alternative epoxy barrier coat be considered for the UV exposed filters that will not degrade visually in the short term. This was obviously not an issue for the Clearwater tanks but will be for the filters.

6 SPECIFIC TESTING

Specific testing that would assist in the concrete remediation includes:

i. Taking core samples and testing for:
   a. the depth of carbonation
   b. compressive strength

ii. Preparing a test panel of the repair product to measure pull-off tension for various pressures of water blasting to determine the most appropriate value.

While the protective coating system that will be applied will prevent further carbonation, measuring the current state will confirm that the reinforcing steel still resides in pH9+ concrete which gives confidence that it is not about to oxidise and spall the concrete after the repair is in place. There is no evidence of spalling visible to date however this doesn't necessarily mean that the passive zone around the reinforcement steel isn't in the early stages of breakdown. This test would provide confidence that the repair will last.

Concrete compressive testing would be carried out on the same core samples. This would be used to refine structural calculations for the tank modifications. More importantly, this strength will be used when designing chemical anchor fixings.

The pull off testing is necessary to ensure that the proposed contractor is applying the correct surface preparation technique. While this was carried out previously, there is conflicting information as to the correct pressure. Also, the techniques and equipment used by the chosen repair contractor may differ to that which was used previously so it allows calibration of the surface preparation prior to a large scale repair. The success of the repair is very much dependant on the quality of the surface preparation so this investigation is necessary.

7 CONSTRUCTION INFORMATION

As we are not recommending an alternative repair solution, the construction procedures and timeframes will be the same as carried out in the previous Clearwater tank remediation. Some key constructability items for consideration in the repair contract are:

1. Water blasting surface preparation – water blasting must break back the weakened concrete face to a sound substrate. The Aurecon project completion report states that this was

©Bonacci Infrastructure

achieved by water blasting at a pressure of 6000psi however Bart Vervetjes from Seqwater has suggested that the figure used was 7000psi. We have also spoken to Mike Rutherford (formerly Freyssinet) who suggested the appropriate figure was 4500psi. With this conflicting information, trials are necessary to confirm the appropriate figure. The break back concrete should finish at a saw cut recess of approximately 10mm. The actual depth required will need to be specified by the render supplier to suit their product.

2. Ensure that the concrete matrix is sufficiently dry prior to priming – the actual moisture content will need to meet the requirements of the coating supplier. The key issue is to ensure that the concrete will not 'outgas' either moisture or air as this can lead to the barrier forming bubbles and peeling away from the surface. To confirm that the concrete has been adequately dried out, a Mat Test may be performed (ASTM D 4263).
3. Prime the concrete prior to mortar application - the concrete must be primed adequately to ensure that the repair mortar will bond successfully to the substrate.
4. Render to provide smooth even surface for barrier – rendering the surface and filling any bug holes will provide a smooth surface for the final barrier coat. This minimises the surface area for the final barrier and assists with confirming proper coverage of the final barrier.

8 RECOMENDATIONS

The system chosen by Seqwater to repair the concrete surface of the stages 3 and 4 clear water tanks is also appropriate for stages 1 and 2. Most importantly, the Epimax 225 Primer and mortar combination have proved the best suited to bonding to a substrate with a high proportion of exposed aggregate that is rounded. Given the relatively benign water contained in the tanks, a less expensive epoxy final coating may be considered in lieu of Epimax 333AR. Epimax 330 was suggested by Epimax as a suitable alternative as it is also potable water approved to AS4020 and compatible with the Epimax 225 mortar.

The same system is recommended for the filters as these vessels have experienced the same damage and are also characterised by a surface proliferated with rounded exposed aggregate. It is also recommended that Epimax 330 be considered for use as the epoxy final coating as this material is less susceptible to discolouration and 'chalking' when exposed to UV light than Epimax 333AR. Note that the long term effectiveness of both barriers will not be affected by UV light, just the appearance.

With regard to construction considerations, it is recommended that the repair works be carried out in a de-humidified environment as was done previously. It is expected that the works will need to fit a tight program to minimise the disruption to Seqwaters' operations and this will ensure that works can proceed regardless of weather conditions and the repair products are applied and cured consistently in accordance with the coating manufacturers requirements.

©Bonacci Infrastructure

Technical Memo

Project:	**Mt Crosby East Bank WTP Filter Refurbishment**	*Project Code:*	83504178
Date:	24/4/18	*Memo No.:*	13A
To:	Bart Vervetjes, Seqwater		
From:	Steve Moore		
Subject:	**Filters 1 to 12 Tee Beam Core Hole Assessment**		

Rev. No.	Date	Description	Prepared By	Checked By	Reviewed By	Approved By
1	10/4/18	Final	Bonacci		SM	SM
A	24/4/18	Amended	Bonacci		SM	SM

• INTRODUCTION

The Mt Crosby East Bank Water Treatment Plant (WTP) treats 70% of the water servicing the greater Brisbane region in Southeast Queensland. The plants treats a maximum of 650 ML/day with all of their 20 filters in operation. The ongoing operation of the plant is therefore critical to the region's water supply and any partial plant outages must be timed carefully to ensure the plant is able to keep up with water demand.

Stantec has been engaged by Seqwater to provide engineering design services for the filter refurbishment works at the Mt Crosby East Bank WTP—a project that includes:

- Replacement of the filter inlet gates
- Required filter structural modifications
- Installation of a new underdrain system and new outlet launders
- Replacement of the filter media
- Replacement of the backwash header piping
- Installation of a new air scours system
- Automated backwash controls upgrade

As part of the filter inlet gate replacement, the adopted solution requires a nominal 75mm vertical core hole through an existing reinforced concrete Tee Beam to accommodate the gate spindle. Stantec has engaged Bonnaci Infrastructure to undertake an assessment of beam to confirm the structural integrity of beam with the proposed cored hole.

Revision A addressed queries from Seqwater as follows:

1. The report "Subject" heading is given as "Concrete Remediation Assessment Report" which is incorrect. **- Addressed**
2. Please provide as an attachment or appendix a copy of the As-Constructed Drawing (or drawing number), providing details of all existing reinforcing in the beam (not just the reinforcing that is to remain). **Relevant drawing DRG No 8/631 attached**
3. Please include details on the material strength (steel and concrete) properties that are being assumed in the structural calculations, and more details on the actual calculation. As these structures are quite old and pre-date many of the current day standards and material specifications it needs to be clear what material properties have been used in these calculations. **Addressed in amended Bonacci Report attached**
4. Please also provide calculations of the check on shear strength in this beam at this location. **Details of Shear assessment in Amended Bonacci report attached.**

- **STRUCTURAL ASSESSMENT OF EXISTNG FILTER TEE BEAMS TO UNDERTAKE CORING FOR INLET GATE SHAFT**

The details of the analysis undertaken by Bonacci is included in the attached technical memorandum.

It confirms that the proposed 75mm hole can be cored through the beam without impacting the integrity of the beam.

The coring will intercept some reinforcing and it will be necessary for the cut surface to be protected against corrosion. It is proposed to epoxy coat the cut face. Considering the difficulties of coating inside the core hole, a solution using a stainless steel sleeve inserted in the core hole to allow for the epoxy to be injected into the annulus between the sleeve and cut face. This is not a prescribed solution and it is recommended that submissions from the contractor on achieving the required coating methodology be requested.

Prepared by: Dan Hoger RPEQ 8698
Prepared for: Stantec
Date: 24 April 2018

BONACCI INFRASTRUCTURE

TECHNICAL MEMORANDUM

Mt Crosby East Water Treatment Plant - Coring through Filter Tee Beams

As part of the filter upgrade project, it is required to core through the existing T shaped tie beams that are located at coping level in filters 1 to 12. The purpose of the core is to allow the spindle of proposed new penstocks to pass through the beam. The penstocks are located over the inlet aperture through the gallery wall.

At this location the tie beam carries a significant negative moment. The core hole will sever 3 reinforcement bars, 2 of which are located in the upper part of the beam and contribute to the negative moment capacity. Bonacci Infrastructure have analysed the beam and found that even without the bars, the stress in the remaining bars fell within AS3735 code limits. This is summarised below.

Assumptions:
* Concrete strength assumed to be 32MPa
* Reinforcement bars are assumed to be plain round bar with a yield strength of 230MPa

Existing Reinforcement (refer drawing number 8/631 dated 2nd July 1954):
* 5 x 22dia bars in top face
* 3 x 22dia bars in the bottom flange of the Tee
* 5 x 22dia bars in the bottom of the web of the Tee
* 10mm ligatures at 200mm centres

Coring through the Tee beam leaves:
* 4 x 22dia bars in the top face
* 2 x 22dia bars in the bottom of the flange of the Tee
* 4 x 22dia bars in the bottom of the web of the Tee
* shear ligatures are unaffected

The working design actions of the Tee beam at the core location are:

* 73kNm negative moment
* 50kN shear
* 236kN tension

The design actions result in a tensile stress of 102MPa in the top face bars. The maximum permissible bar stress in accordance with AS3735 is 132.5MPa so the core hole does not compromise the structural integrity of the beam.

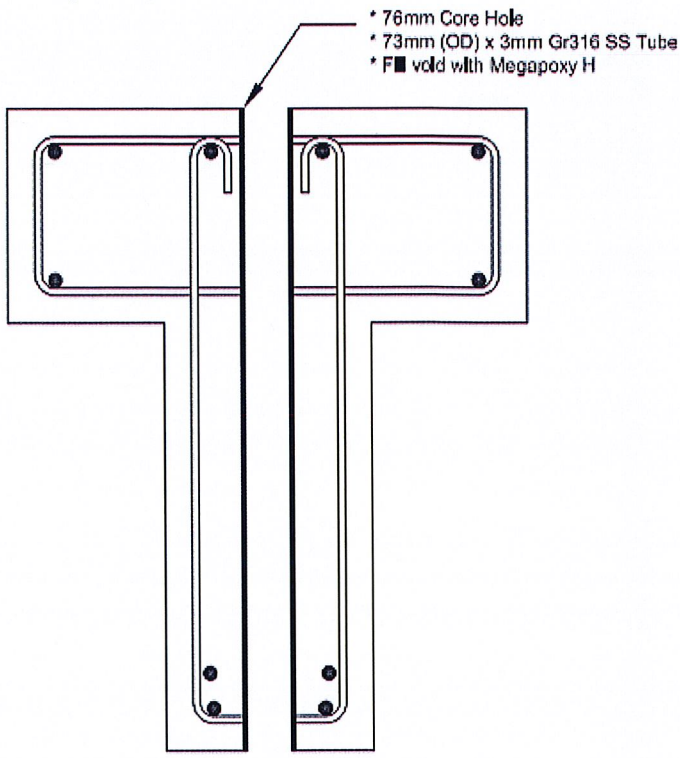

The shear capacity of the beam ignoring ligatures is 189kN based on AS3600 Clause 8.2.7. As the shear design action is less than half of the capacity, only minimum shear reinforcement is required. The R10 ligatures at 200mm centres meet this requirement.

The core will compromise the reinforcement cover. It is recommended that the core be sleeved with a stainless steel tube with the annulus between the tube and the core-hole filled with Megapoxy H. See figure 1 for details.

24/4/2018

Figure 1 - Typical Cored Tee Beam

©Bonacci Infrastructure

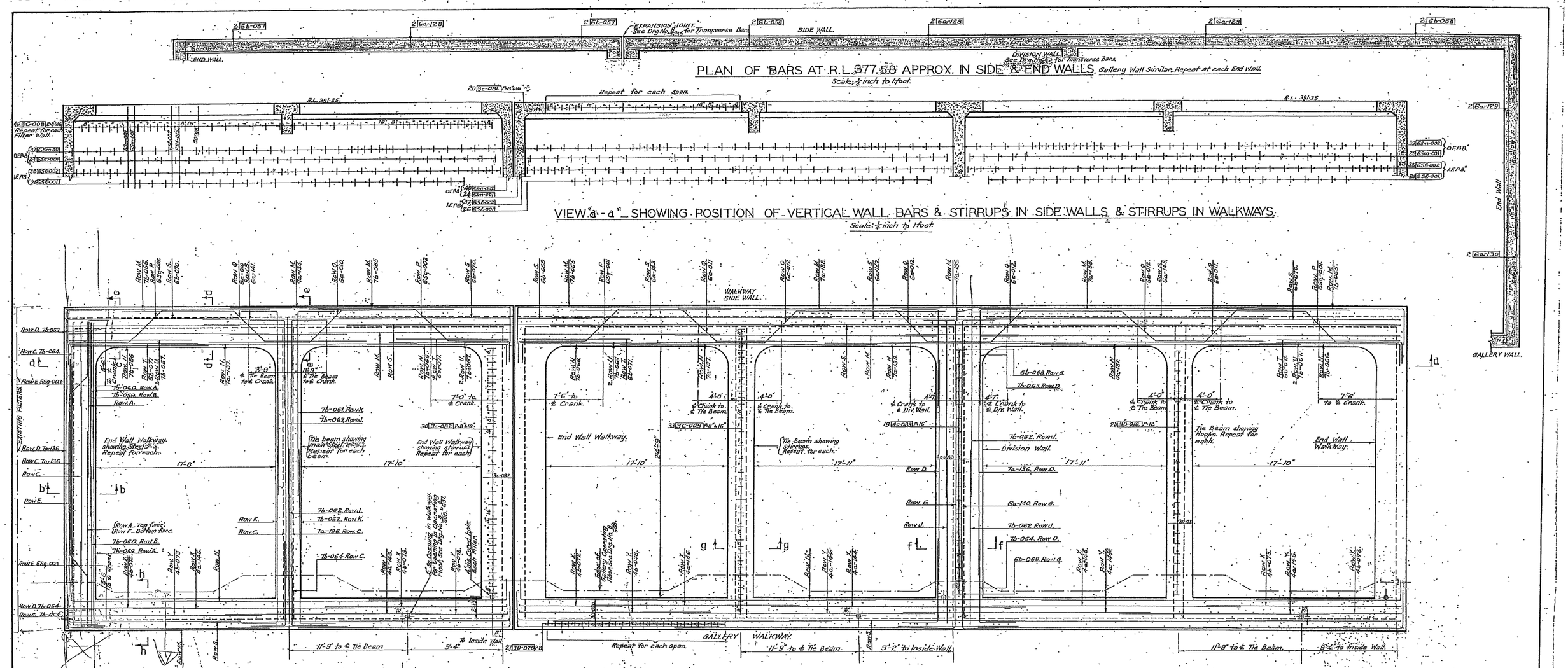

IDENTIFICATION OF REINFORCING BARS.

The prefixed numeral indicates the size of the bar (in eighths of an inch) followed by the shape letter or letters, then a numeral suffix to indicate the serial number on the steel lists. thus 7b-005 indicates ⅞" dia bar, shape b, No. 6 in the Series.

1½" Minimum Cover to Bars.

BARS IN END AND DIVISION WALLS AND TIE BEAMS.

Row A.	7b-060 & 7b-059.
Row B.	7b-059 & 7b-060
Row C.	2 7b-064 & 7a-136.
Row D.	7b-064, 7a-136 & 7b-063.
Row E.	2 5Sq-003. Cranked Bars.
Row G	6b-068, 6a-140 & 6b-068.
Row H.	½" dia distributors (from Walls)
Row J.	2 7b-062.
Row K.	7b-062 & 7b-061.
Row F.	1 7b-060 (Gallery side only).

	SINGLE FILTER.	DOUBLE FILTER.
Row M.	7b-065, 7a-134, 7b-065.	7b-065, 7a-138, 7a-135, 7a-138, 7b-065.
Row N.	7b-066, 7a-137, 7b-066.	7b-066, 7a-131, 7a-139, 7a-137, 7b-066.
Row P.	2 6Sq-002.	2 6Sq-001.
Row Q	2 6a-010.	6a-011, 6a-012, 6a-012, 6a-012, 6a-012, 6a-011.
Row R	½" dia distributors.	½" dia distributors. (from Side Walls)
Row S.	6b-070, 6a-141, 6b-070.	6b-069, 6a-143, 6a-142, 6a-143, 6b-070.
Row T.	2 6b-071.	2 6b-071.
Row U.	2 7b-067.	2 7b-067.
Row X.	4b-072, 4a-146, 4b-073.	4b-072, 4a-146, 4a-144, 4a-145, 4b-073.
Row Y.	4b-073, 4a-146, 4b-072.	4b-073, 4a-145, 4a-144, 4a-146, 4b-072.

ENGINEER FOR W.S.&S.

DEPUTY ENGINEER FOR W.S.&S.

CONSTRUCTION ENGINEER W.S.&S. 13.9.54.

ENGINEER FOR DESIGN W.S.&S. 10.10.54.

BRISBANE CITY COUNCIL
DEPT OF WATER SUPPLY & SEWERAGE.
TREATMENT AMPLIFICATION STAGE II
LOW LEVEL FILTERS.
DETAILS OF REINFORCEMENT IN WALKWAYS & TIE BEAMS.

Design			Level Bk.		References	Scale: ½" to 1 foot.
Drawn	J.E.B.	2.7.54.	Field Bk.			Drawing No. 8
Traced	C.M.H.	16.7.54.	Bore Bk.			631.
Checked		18.8.54.	Passed			

Stantec (cp comments 3/5

Technical Memo

Project:	**Mt Crosby East Bank WTP Filter Refurbishment**	*Project Code:*	83504178
Date:	02/05/18	*Memo No.:*	14
To:	Bart Vervetjes, Seqwater		
From:	Steve Moore		
Subject:	**Air Scour Feeder Pipework Options**		

Rev. No.	Date	Description	Prepared By	Checked By	Reviewed By	Approved By
1	03/05/18	Draft	JB			

1 INTRODUCTION

The Mt Crosby East Bank Water Treatment Plant (WTP) treats 70% of the water servicing the greater Brisbane region in Southeast Queensland. The plants treats a maximum of 650 ML/day with all of their 20 filters in operation. The ongoing operation of the plant is therefore critical to the region's water supply and any partial plant outages must be timed carefully to ensure the plant is able to keep up with water demand.
Stantec has been engaged by Seqwater to provide engineering design services for the filter refurbishment works at the Mt Crosby East Bank WTP—a project that includes:

- Replacement of the filter inlet gates
- Required filter structural modifications
- Installation of a new underdrain system and new outlet launders
- Replacement of the filter media
- Replacement of the backwash header piping
- Installation of a new air scours system
- Automated backwash controls upgrade

As part of the new underdrain system, air needs to be supplied from the air scour headers through air scour feed pipes into the underdrain system. This memo documents the options available for the air scour feeder pipework.

2 PROPOSED UNDERDRAIN SYSTEM

We have adopted the

For the purposes of this assessment, ~~it has been assumed that the preferred underdrain system is the~~ Triton underdrain system supplied by Aqseptence. It's assumed that the spacing between the underdrain laterals is at 315mm.

2.1 DISCARDED OPTIONS

A number of options for the air scour feed pipework were considered but eventually discarded. These are summarised below.

Droppers onto each underdrain
DN50 air scour feeder pipe would connect to each end of every underdrain. This would require 50 air feeder droppers into each filter. Over all 20 of the filters, around 1000 individual air dropper pipes would be needed. Although technically viable, this option would be complicated to install and would be costly. Based on the added complexity and cost, this option was discarded.

Pipework through the filter gullet

outside end of the

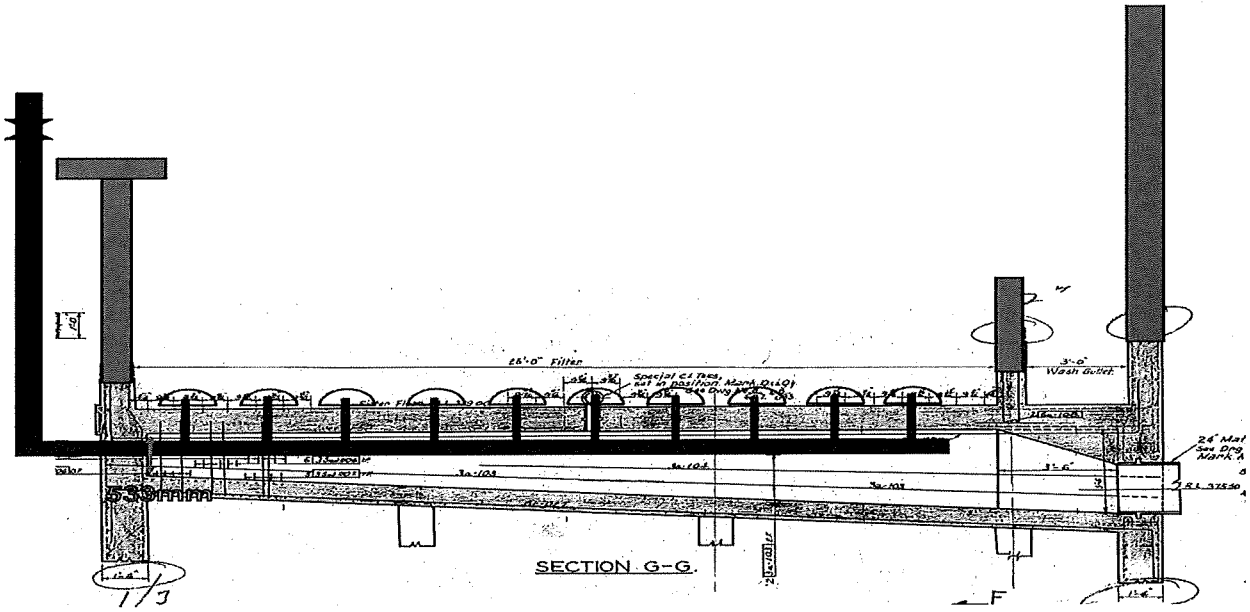

Figure 1: Air Scour feeder pipework through outer gullet wall

The air scour feeder pipework would enter the gullet through a hole in the outside of the filter wall. In this location the gullet chamber is 762mm wide and 533mm high, making it difficult to create a wall penetration. There is also a risk that the wall penetration could leak.

~~Future~~ access to the air scour pipeline ~~would be extremely~~ difficult, the DN300 air feeder pipework would displace a large volume of water that would normally be used for backwashing, ~~limiting~~ the hydraulic effectiveness of the system.

The gullet is periodically filled and emptied with water, meaning that the air scour feeder pipework would be completely submerged during the operation of the filter. This could add strain onto the pipework as it constantly floats and sinks and it could also increase the risk of corrosion.

The isolation valve for the feeder pipework would need to be on the outside of the filter walls which is not ideal. An air header alignment along the outside of the filter walls is not desirable as already discussed in TM07 (Option 4).

Due to these reasons this option was discarded.

FEASIBLE OPTIONS

The exact size and location of the air scour feed pipework will be confirmed with the selected underdrain supplier. Listed below are the preferred location for the air scour feed pipework.

Stage 3&4 Filters

The central walkway between each of the filters on the Stage 3&4 filters offers a perfect location to support the air scour feed pipework. Currently the central walkways is not designed for normal maintenance activities as the width of the walkway is only 700mm and there are no handrails. The central walkway offers no function other than additional structural support to the filter beds.

An alternate feed pipe location is shown below in Figure 2. The alternate pipe feed reduces the amount of pipework and supports required, but the isolation valve is not in a desirable location. The valve is electrically actuated so it doesn't need access during normal operation, but it does need access for maintenance activities. As the central walkway is unsafe to use for access, maintenance access could be provided through a modified window in the filter gallery, this would not be ideal and could create a difficult working environment during maintenance. As such the alternative alignment is not preferred.

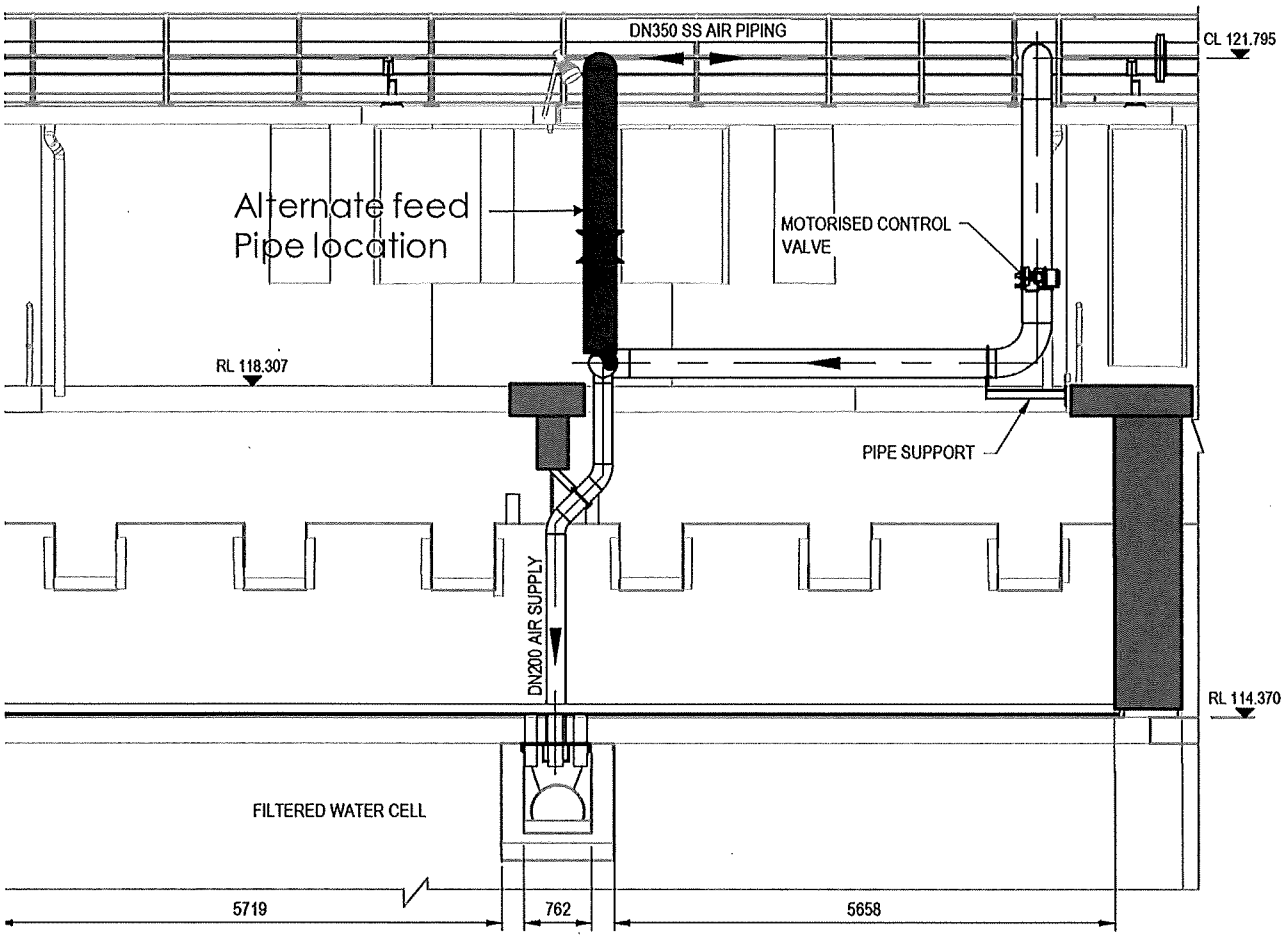

Figure 2: Alternate air scour feed pipe location on the Stage 3&4 Filters

The air scour feeder pipework would span the filter and be supported along the central walkway. Apart from the DN200 dropper pipework, the majority of the DN350 air scour feed pipework would be above the top water level in the filters. A number of non-standard supports would need to be constructed to support the pipework, this includes the cantilever support from the main walkway and the angle support on the dropper pipe.

The existing filter access steps located at the end of the central walkway will need to be relocated for this option. An alternative location is suggested in the concept drawing in Appendix A. It is understood that the existing handrails do not comply with the most recent building code. Its impractical to replace all of the existing handrailing as part of this project, SEQWater may consider a separate project to replace all the existing handrailing. The new sections of handrail and the new filter access steps with be designed to comply with the most recent building code.

Stage 1&2 Filters 3+4

A different alignment is required for the Stage 1&2 filters as they do not have a central walkway spanning the center of the filters. Appendix A shows the proposed alignment of the air scour feed pipework.

By mounting the pipework on the filter gullets it provides a positive downward force on the wall. This will help to compensate for the addition overturning moment placed on the wall by the extra media layer and higher water level. There is a concern that with more filter media and a higher top water level, the extra pressure of the filter gullet walls could add additional horizontal pressure to the gullet walls. This will be exacerbated when the concrete troughs are replaced with steel troughs. The steel troughs have a tendency to expand and contract, adding extra horizontal forces on the filter gullet walls.

At a diameter of 350mm, AS4041-2006 recommends a spacing of supports for steel pipe every 10.6m. The distance between the supports (gullet wall to inside of filter wall) is only 7m so there is no issue with the span. Additional support is offered by the DN200 dropper pipes which will be cast into the filter floor.

As the DN350 air scour feed pipework will be above the top water level of the filter, there is no floatation or corrosion issues.

No modifications to the handrailing or access steps are required for the Stage 1&2 air scour feed pipework.

An alternative alignment could drop down from the center of the filter, but similar to the Stage 1+2 alternative alignment, this alignment is not desirable as it limits access for any future maintenance.

Conclusion conclusion?

Proceed as per Drawings A

Stantec

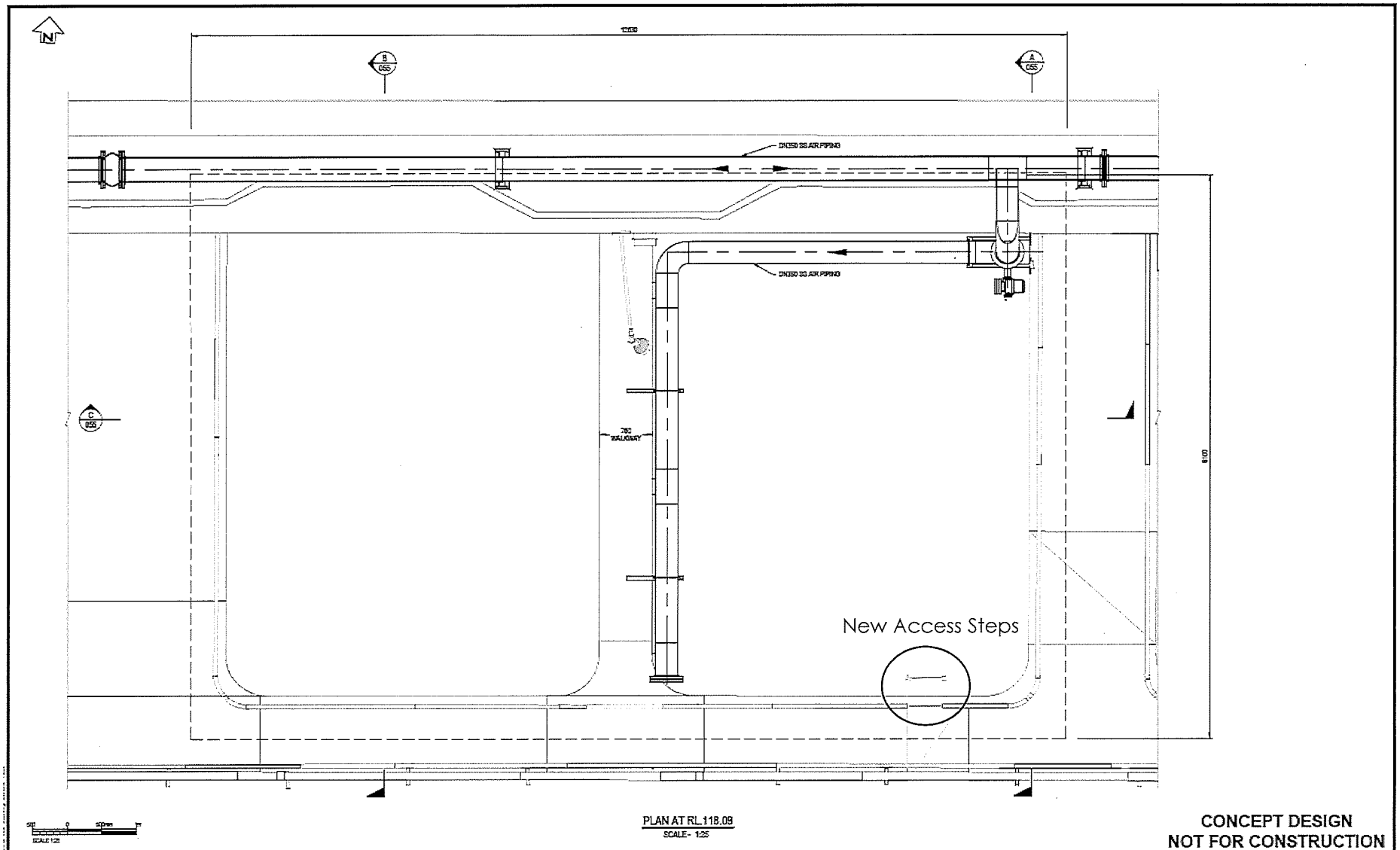

CONCEPT DESIGN
NOT FOR CONSTRUCTION

Stantec

SCALE:		AS CONSTRUCTED	REV.
ORIG. SIZE: A1		NAME:	
		DATE:	
		SIGNATURE:	
		RPEQ No.	
		FOR CONSTRUCTION	REV.
		NAME:	
		DATE:	
		SIGNATURE:	
		RPEQ No.	

REV	DESCRIPTION	DATE	DWN	APP
C	CONCEPT DESIGN	24.04.24		

REVISIONS

seqwater WATER FOR LIFE

TITLE
MT CROSBY EAST BANK
FILTER UPGRADE PROJECT
TYPICAL FILTER
PLAN VIEW - TOP LEVEL

DRAWING NUMBER: X-DWG-TEB-053

REVISION: C

APPENDIX A – CONCEPT DRAWINGS

Technical Memo

Project:	**Mt Crosby East Bank WTP Filter Refurbishment**	*Project Code:*	83504178
Date:	08/05/18	*Memo No.:*	15
To:	Bart Vervetjes, Seqwater		
From:	Steve Moore		
Subject:	**Filter Control Options**		

Rev. No.	Date	Description	Prepared By	Checked By	Reviewed By	Approved By
1	08/05/18	Draft	CP	MA	JB	SM
2	17/05/18	Client Issue	CP			

1. INTRODUCTION

The Mt Crosby East Bank Water Treatment Plant (WTP) treats 70% of the water servicing the greater Brisbane region in Southeast Queensland. The plants treats a maximum of 650 ML/day with all of their 20 filters in operation. The ongoing operation of the plant is therefore critical to the region's water supply and any partial plant outages must be timed carefully to ensure the plant is able to keep up with water demand.
Stantec has been engaged by Seqwater to provide engineering design services for the filter refurbishment works at the Mt Crosby East Bank WTP—a project that includes:

- Replacement of the filter inlet gates
- Required filter structural modifications
- Installation of a new underdrain system and new outlet launders
- Replacement of the filter media
- Replacement of the backwash header piping
- Installation of a new air scours system
- Automated backwash controls upgrade

As part of the automation upgrade work there are a number of options available to modify the way the current filter backwashing is sequenced/undertaken. This memo documents the options available for enhancements to the existing filter controls.

This memo also addresses items required in the Scope of Works Clause 6.2: Improvements to be Investigated as Part of the Design.

2. FILTER BACKWASHING PROCESS CONTROL OPTIONS

A range of options are available to enhance the existing performance of the plant through modifications to the filter control arrangements. These include:

- Standing time, slow start up or an extended terminal sub-fluidisation wash (ETSW) after backwash
- Cascading backwashing
- Temperature adjusted backwash rate
- Backwash turbidity monitoring
- Pumped backwashing
- Differential pressure (DP) profile monitoring

Each of these options are discussed in the subsections below.

2.1 STANDING TIME, SLOW START UP OR ETSW AFTER BACKWASH

Removal of turbidity by a media filter requires that, when a suspended particle collides with a media grain, it "sticks" and is retained on the surface. During a backwash the particles that are sheared off the filter media tend to revert back to their original raw water zeta potential, and the precipitated coagulant that makes the

media grains sticky is removed as well. Therefore, when the filter starts up after the backwash, particles do not readily reattach themselves to the media and can pass through the filter resulting in high turbidity spikes. A ripening period is generally required for the stickiness of the media grains to be re-established.

Provision of standing time, slow startup of a filter or ETSW may reduce the magnitude of high turbidity ripening spikes which can occur as the filter comes back on-line after a backwash.

The current sequence for bringing the filter back online after backwash is to:

- open the filter inlet penstock to the intermediate position,
- wait until the filter water level is above the minimum operating level
- open the inlet penstock fully
- open the filter outlet valve at a rate of 25% per minute until the filter flow rate has reached the filter outlet flow set point or the valve is more than 60% open
- place the outlet valve into automatic control

Standing time is effectively a delay following the refilling of the filter after backwash. To introduce a standing time would simply require a delay following the cessation of the high rate backwash before the inlet penstock is re-opened. Standing time allows for some coagulant and suspended particles to coat the media grains and contribute stickiness, but the benefits of a short (15 to 30 minute) standing time is considered quite limited.

Slow start-up is effectively the slow ramping up of the filter flowrate over a set period of time rather than coming back online and immediately ramping up to full flow. To introduce slow start up would require the filter outlet flow set point to gradually increase in a series of small increments over a set period of time (typically 15 to 30 minutes) before ultimately reaching the value being used for the other filters. A slow start up feature should reduce the magnitude of any turbidity spikes, but will increase the time it takes for the filter to properly ripen so the spikes are likely to last longer.

Extended Terminal Sub-fluidisation Wash (ETSW) is an additional low rate washing stage at the end of the backwash sequence designed to rinse out the remaining particles 'loose' in the media and those left in the water above the media once the filter media has settled following the high rate fluidization wash. The ETSW uses approximately one entire filter cell's water content. For TEB an ETSW flowrate of around $12m^3/m^2/hr$ for around 13 minutes would be required which would increase the volume of dirty backwash water by around 75%. Given the limitations in capacity of the existing dirty backwash water handling system the implementation of ETSW is not recommended at this time.

A disadvantage of introducing any of these measures is that the backwash cycle takes longer before the filter gets back to full production, thereby increasing the loading to the other on-line filters.

Each of these measures could be manually simulated on an existing filter to determine the extent of reduction in filtered water turbidity when a filter comes back on-line after a backwash and whether the addition of any of these features would be of overall benefit.

Conclusions

The introduction of a standing time feature is readily undertaken but is likely to be of little or no benefit in reducing turbidity spikes on filter start-up after backwash. It is proposed to include this feature in the control system with an adjustable standing time period. It is not proposed to activate this feature on commissioning of new filters. Ie the standing time will be set to zero

Including the option of a slow start up feature for the filters following backwashing can be readily implemented by slowing down the opening rate of the filter Rate Control Valve. It is proposed to include this facility as an option within the control system, ie normal start or slow start able to be selected by the Operator.

The provision of ETSW would most likely reduce turbidity spikes on filter start-up after backwash but due to the additional backwash water required is not recommended at TEB. It is not proposed to include this feature in the control system

2.2 CASCADING BACKWASHING

The current backwash sequencing will only allow one filter to go into the drain down and backwash mode at a time. The operator can put a second filter into drain down manually.

The limitation for this is the capacity of the dirty backwash water holding tank. A pre-requisite for starting a backwash sequence is that there is sufficient available volume within the backwash balance tank. Having

multiple filters going into backwash would increase the risk of an overflow of the holding tank. The drainage pipeline also only has capacity for one backwash at a time.

The sequence could be modified to allow for a second filter to automatically go into drain down mode whilst the first filter is still within the backwash cycle. The sequence would need an interlock such that the air scour cycle for the second filter did not start until the first filter had completed the high rate backwash sequence so that the available water depth in the backwash balance tank can be confirmed. The trigger for allowing a second filter to start the drain down cycle might be when the air scour commences on the first filter. In this way a maximum of two filters would be either in the drain down or backwashing sequence at any time.

If a standing time or slow start feature was also added it would be necessary to change the proposed trigger arrangements to ensure that no more than two filters were either in the drain down or backwashing sequence at any time.

The emptying the backwash balance tank is the key constraint in sequencing backwashes at present because the time to remove a backwash volume from the balance tank is greater than the time to undertake a filter backwash. As a consequence we see little benefit in cascading the backwashing of filters at this time.

Conclusion
Cascading backwashing is not recommended at this time as there is insufficient backwash holding tank capacity.

2.3 TEMPERATURE ADJUSTED BACKWASH RATE

The proposed refurbishment works includes the provision of facilities for adjusting the high rate backwash flowrate depending on the temperature of the backwash water. The backwash water temperature can vary from 14 to 32 deg C. As a consequence the required backwash water flowrate can vary by up to 16%, because the change in water viscosity with temperature changes the drag force on the media and, therefore, its fluidisation behaviour. As the water becomes warmer, the viscosity decreases and the reduced drag force means that a higher up flow velocity is required to achieve a given bed expansion.

A temperature sensor could be located at the high level reservoir in a manner that can be most easily installed and maintained.

If the temperature sensor is used to automatically adjust the backwash flowrate, an adjustment factor will be applied to the standard lookup table flowrate settings based on the temperature reading. A self learning system could be introduced within the PLC using the valve look up tables, the target temperature adjusted flowrates and the actual flowmeter readings during the backwash. The temperature sensor becomes a critical piece of instrumentation under this arrangement.

Conclusion
The provision of a temperature adjusted backwash flowrate will prevent over expansion of the filter media and should be introduced. It is proposed to include this requirement in the control system.

2.4 BACKWASH TURBIDITY MEASUREMENT

Typically the duration of the high rate backwash is initially set at a default value of around 5 or 6 minutes, and then adjusted using visual observation of the cleanliness of the backwash water and filter performance data. This duration can be optimized so that the high rate backwash cycle length is just long enough to flush out the mass of suspended solids entrained in the media. The turbidity of backwash water during a high-rate backwash typically follows a pattern shown in Figure 1 below, which shows measured backwash turbidity during a 40 m/hr backwash of a 1.2 m deep sand filter after a filtration cycle[1]. The vast majority of the mass of entrained solids is flushed out within the first 5 to 7 minutes, or about 2 to 4 bed volumes. Past this point, additional backwash time consumes large volumes of washwater while removing a minimal amount of solids.

[1] Adelman, M.J., Weber-Shirk, M.L., Cordero, A.N., Coffey, S.L., Maher, W.J., Guelig, D., Will, J.C., Stodter, S.C., Hurst, M.W., and Lion, L.W. (2012). "Stacked filters: novel approach to rapid sand filtration." *J. Environ. Eng.,* **38**(10), 999–1008.

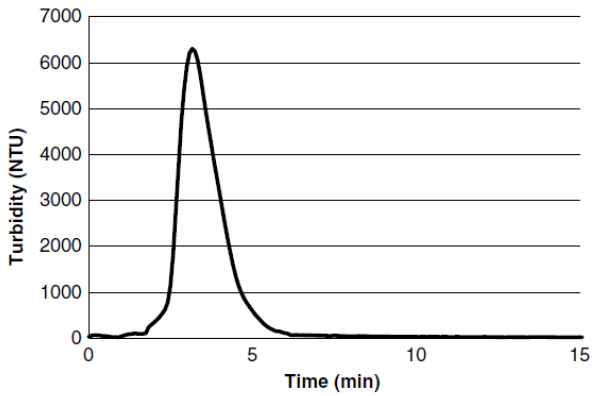

Figure 1 – Backwash Turbidity Curve at 40 m/hr, 1.2 m deep filter

Developing a relationship between backwash water turbidity, filter performance and the volume of dirty backwash water generated will enable an optimal backwash turbidity to be identified. This is likely to be between 10 and 20 NTU to be at the optimum point along the particle removal curve for optimal performance. Backwash turbidity measurement may therefore be considered as a way to reduce the overall filter ripening time after backwash and the volume of backwash water being generated.

The use of on-line monitoring of the backwash water turbidity to control the backwash sequence duration could be adopted. The instrument selected should have a range from 1 to 1000 NTU, so as to capture the rising and falling portions of the curve shown in Figure 1. This control would likely be a simple trim on the overall duration by allowing the backwash to cease up to 60 seconds early or continue for an additional 60 seconds say.

Investigations on the most suitable type of instrument would need to be undertaken. Due to the long and varying lag times between the filters and a common measuring point, a single measuring unit would not be effective. Individual turbidity sensors on each filter would be required. A trial on a single filter for equipment accuracy and reliability would be recommended before proceeding to fit out each new filter with its own sensor.

However, from our experience the sensors become readily fouled and are a maintenance headache. In plants where they have been installed the analyzers were ultimately abandoned. We would therefore just propose a grab sample study to develop the turbidity/backwash time relationship on one of the new filters and a semi-annual follow up to confirm that the conditions have not changed. Such a study is easy to undertake, helps the operators understand why wash time matters, provides better and more useful data, and frequency is sufficient for efficient operation and minimization of the backwash volume.

Conclusions

Understanding the relationship between backwash turbidity and backwash run time can be achieved through a series of grab sample tests or the provision of backwash turbidity sensors on each filter.

Online Backwash turbidity monitoring would only be beneficial if the filters display a large variability in residual backwash water turbidity when using a fixed backwash duration. Individual backwash water turbidity sensors would be required for each filter which would require substantial ongoing maintenance.

It is not proposed to include online turbidity monitoring of backwash water at this time.

2.5 PUMPED BACKWASH

2.5.1 High Level Reservoir Off-line

To allow backwashing to occur when the high level reservoir is isolated from the backwash main for maintenance, an optional pumped backwash mode can be implemented. The mode would be selectable from SCADA, and would override the interlocking between the backwash header flow control valves and the high level reservoir pumps. This facility is currently available within the existing control system.

When pumped backwash mode is enabled:

- The High Level Reservoir Pumps will ignore the interlock from the Backwash Header Flow Control Valves
- Pumps will ignore any stop or start signals based on the High level Reservoir level.

- The Backwash main header FCVs will have maximum fixed opening settings

The outcome of this will be:

- Pumps may be started manually without the pump run permissive from the header valves being present.
- Backwash main header valves will not wait for pumps to stop before opening.

The high level reservoir pumps are designed for higher head than will be required to backwash the filters and will run off their design curves with the potential for cavitation or motor overload unless the flow is restricted to around 250L/sec per pump. Therefore, the backwash header FCVs will need to have a maximum %opening setting to throttle the available flowrate.

2.5.2 High Level Reservoir On-line

Having the ability to keep the high level reservoir pumps in operation whilst a backwash is being undertaken using the feed from the high level reservoir would enable the high level reservoir to be operated over a wider level range which may provide some wider operational benefits. It would also simplify the control system as interlocks between the high level reservoir pumps and the backwash header FCVs would not be required. However, this represents a significant risk to the plant operation as the actual flowrate to the filter during a backwash will be uncertain because:

- any flow from an operating high level reservoir pump(s) would not go through the backwash flowmeter,
- the 'look up tables' in the SCADA for the required backwash header FCV %open settings are based on a full high level reservoir condition and if the high level reservoir is no longer kept at near top water level at all times, it will result in a lower backwash flowrate due to the reduced overall head on the upstream side of the FCVs. Maintaining the high level reservoir in the near full condition is therefore preferred.

Conclusions
Pumped backwashing feature can be added to allow manual backwashing to be undertaken when the high level reservoir is out of service. It is proposed to include this feature in the control system.

Having the ability to keep the high level reservoir pumps in operation whilst a backwash is being undertaken using the feed from the high level reservoir represents an operational risk and is therefore not proposed to be included in the control system

2.6 DIFFERENTIAL PRESSURE PROFILE MONITORING

The DP sensor for each filter is measuring the total head loss across the filter media and the underdrains. This is used to determine the rate of head loss buildup and to call for a filter backwash when the differential pressure level reaches a target set point.

Providing multiple pressure tapping points is often undertaken in a new plant on one of the filters to enable the assessment of the rate of head loss through the filter media. This enables the plant operator to determine how well the floc is being driven down into the media which can assist with the selection of the type and dose rates of coagulant and filter aid polymer being used to optimize plant and filter performance. Proposed locations would be:

- About 150 mm below top of bed
- About halfway point in the coal
- About 150 mm above coal/sand interface
- About 150 mm below coal/sand interface
- About 150 mm above top of underdrain

Such tapping points are not used frequently and as such having permanent pressure sensors on each tapping point would not be warranted. Measurement can be achieved by manifolding the tappings with isolation to a single pressure gauge for manual reading.

None of the existing filters are fitted with tapping points within the filter media. These can be installed by drilling a series of holes through the filter wall. Due to the configuration of the backwash water collection channel within the filters, the location of any tappings into the media needs to consider appropriate access to the tapping and isolation valves. The tap should include a screen on the inside of the filter and include a provision to blow out tubes with a hose fitting. However, the tapping point screens will still eventually plug/fail.

Installing the tapping points into one of the filters could be readily undertaken during the filter refurbishment work. The tappings would be manifolded to be manually selected to read to a common pressure gauge for manual reading. The arrangement would include a flushing connection to routinely clear the screen.

Conclusion

The provision of a series of tapping points into the media of one of the filters would enable the monitoring of the head-loss through the filter. It is proposed to include this monitoring on one filter with a manifolded array connecting the tapping points to a pressure gauge.

Due to the filter configuration, finding a suitable location for the tappings with safe access is likely to be complicated and relatively expensive. Further investigation as to the best location for such tappings would be required if this feature is to be adopted.

3. RECOMMENDATIONS

The following options were identified to enhance the existing performance of the plant through modifications to the filter control arrangements:

- Standing time, slow start up or an extended terminal sub-fluidisation wash (ETSW) after backwash
- Cascading backwashing
- Temperature adjusted backwash rate
- Backwash turbidity monitoring
- Pumped backwashing
- DP profile monitoring

It is recommended that:

1. The introduction of a standing time feature is readily undertaken but is likely to be of little or no benefit in reducing turbidity spikes on filter start-up after backwash. It is proposed to include this feature in the control system with an adjustable standing time period. It is not proposed to activate this feature on commissioning of new filters. Ie the standing time will be set to zero
2. Including the option of a slow start up feature for the filters following backwashing would be advantageous and can be readily implemented. It is proposed to include this requirement in the control system.
3. The provision of ETSW would most likely reduce turbidity spikes on filter start-up after backwash but due to the additional backwash water required is not recommended at TEB. It is not proposed to include this feature in the control system
4. Cascading backwashing is not recommended as the dirty backwash water system is the limiting factor in the frequency of backwashing.
5. The provision of a temperature adjusted backwash flowrate will prevent over expansion of the filter media and should be introduced. It is proposed to include this requirement in the control system.
6. Understanding the relationship between backwash turbidity and backwash run time will help the operators to minimise the volume of backwash water required. This can be achieved through a series of grab sample tests. Online Backwash turbidity monitoring would only be beneficial if the filters display a large variability in backwash water turbidity when using a fixed backwash duration. Individual backwash water turbidity sensors would be required for each filter which would require substantial ongoing maintenance. It is not proposed to include online turbidity monitoring of backwash water.
7. The pumped backwashing feature is proposed to be retained as a manual operation to allow backwashing to be undertaken using the high level reservoir pumps when the high level reservoir is Off-line but is not proposed to be included as an option when the high level reservoir is On-line.
8. The provision of a series of tapping points into the media of one of the filters would enable the monitoring of the head-loss through the filter. This can be provided on one filter using a manifolded array connecting the tapping points to a pressure gauge. Due to the existing filter configuration, finding a suitable location for the tappings with safe Operator access is likely to be complicated and relatively expensive. Further investigation as to the best location for such tappings would be required if this feature is to be adopted.

Technical Memo

Project:	**Mt Crosby East Bank WTP Filter Refurbishment**	***Project Code:***	83504178
Date:	12 June 2018	***Memo No.:***	16
To:	Bart Vervetjes, Seqwater		
From:	Steve Moore		
Subject:	**Filter Profile, Backwash Trough, and Blower Sizing**		

Rev. No.	Date	Description	Prepared By	Checked By	Reviewed By	Approved By
1	12/06/2018	Draft for Client	MA, ARP	xx	xx	xx
2		Final				

1. INTRODUCTION

Stantec has been engaged by Seqwater to provide engineering design services for the filter refurbishment works at the Mt Crosby East Bank WTP. This technical memo outlines the finalised filter profile and elevatios, along with the backwash trough arrangement and blower sizing details.

2. FILTER PROFILE

2.1 KEY ASSUMPTIONS

The final design components of filter cells are:

- *Backwash Trough* – up to 762.5 mm deep, raised. The top of the troughs is assumed to be 180 mm below the top of the gullet wall.
- *Gullet Wall* – raised 665 mm. The goal of raising this wall is to enable 40% media expansion space as well as 260 mm minimum expanded bed freeboard.
- *Media Layers* – 900 mm thick layer of filter coal, and 400 mm thick layer of sand. The design bed expansion is assumed to be 20%.
- *Gravel/Support Layers* – none required. The underdrain slots will serve this purpose and can directly support the sand media.
- *Underdrain* – selected Triton system. This system has a total installed height of 150 mm.

The full supporting calculations for the updated filter profile in **Figure 1** are included in **Appendix A** below.

2.2 REVISED PROFILE AND ELEVATIONS

Figure 1 below illustrates the updated vertical profile of filter cells, with suitable depths of media and underdrain. This figure has been updated since the versions presented in TM-03 and TM-04, incorporating the selected underdrain product as well as revised elevation data from the site.

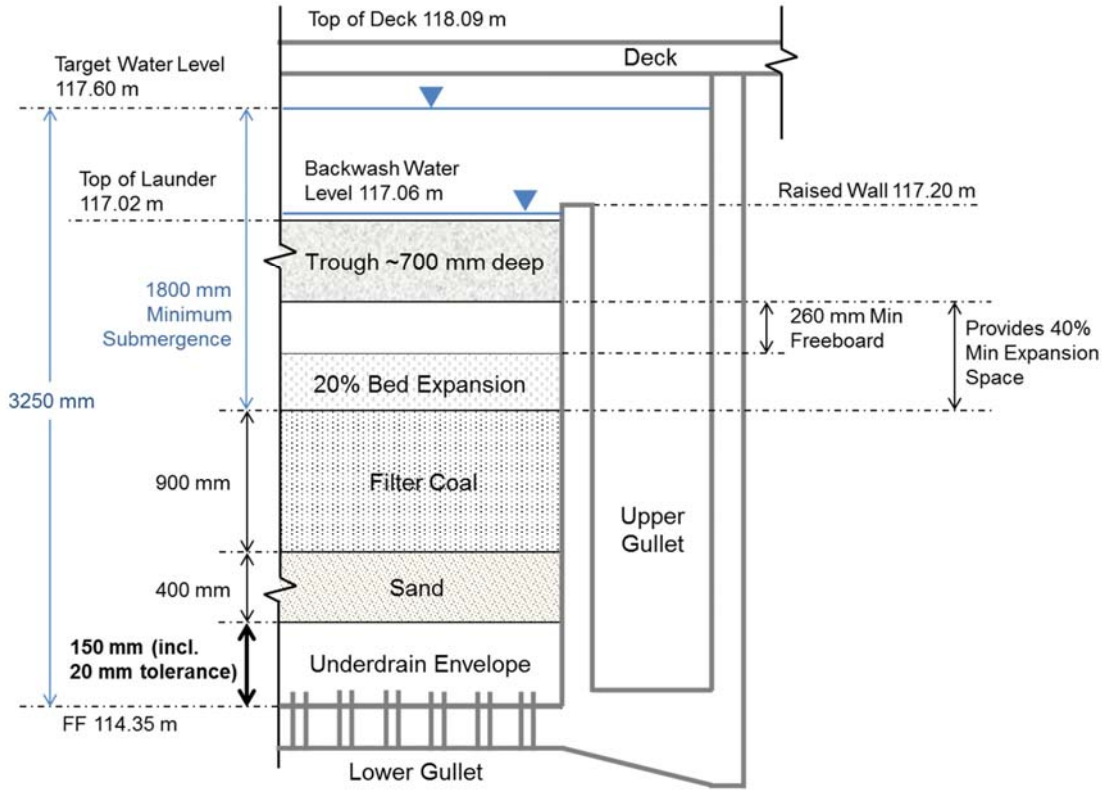

Figure 1: Vertical Profile of Filter Cell

3. BACKWASH TROUGHS

3.1 KEY ASSUMPTIONS

The backwash troughs are sized as shown in **Appendix B**. This was done to ensure that they are adequate to convey the maximum backwash flow, based on the following hydraulic analysis:

- The backwash rate is assumed to be 58 m/hr, or 1580 L/s per filter.
- Equations are defined for the area of flow, wetted perimeter, and hydraulic radius based on the cross-sectional geometry of the troughs.
- Based on a selected number and width of troughs, a flow per trough is calculated. The design assumed six troughs on 2.1 m spacing. This keeps the trough spacing between 1.5 times and 2.5 times the distance from the top of the settled media to the lip of the troughs.
- The critical depth y_c for the flow transition at the end of the trough, and the upstream depth H_0 are solved for, assuming a parabolic water surface in between.
- The total required inside depth of the trough is the maximum water depth H_0 plus a 75 mm freeboard.
- Based on the trough arrangement, the resultant cover of the total filter area and the weir headloss over the edge of the troughs is estimated.

The assumed water surface profile for this hydraulic analysis is illustrated in **Figure 2.**

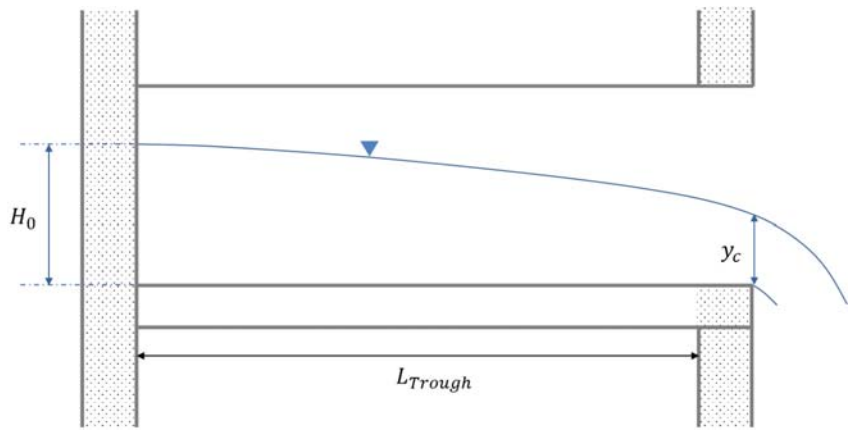

Figure 2: Longitudinal Sketch of Trough Hydraulics.

3.2 STAINLESS STEEL TROUGH OPTION

One possible alternative is to use Type 316 stainless steel troughs, which would be fabricated off-site to the desired dimensions and installed into the rehabilitated filters. This type of trough typically has a semicircular cross-section with an extended top, as shown in **Figure 3** below.

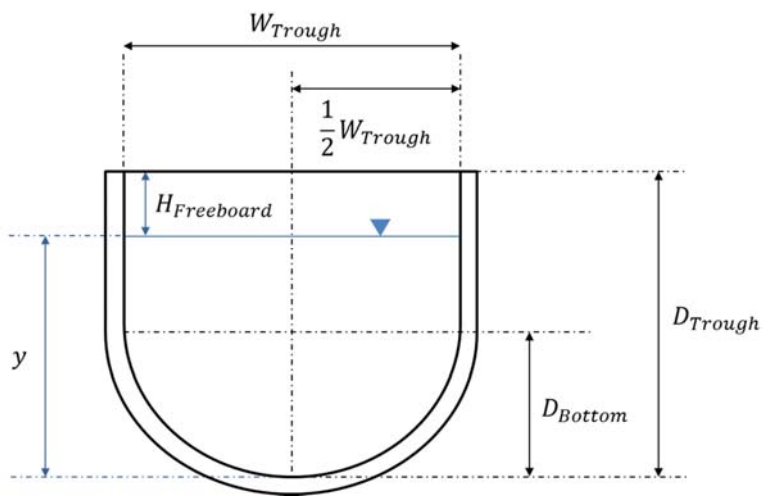

Figure 3: Trough Cross Section, Stainless Steel Option.

For this option, the hydraulic analysis in **Appendix B** found:

- Six troughs, 7.6 m long
- Inside dimensions: 760 mm deep by 520 mm wide
- Outside dimensions: 762.5 mm deep by 525 mm wide, assuming steel is 2.5 mm thick

The structural design for these troughs will be developed to support their installation:

- Key load cases will include both troughs full of water spanning an empty filter, and empty troughs subject to buoyant uplift in a full filter box. Given the long span of the troughs, overall stiffness and deflection will also be checked.
- The required thickness of the steel and the need for other stiffeners will be evaluated. Stiffeners may be required inside or across the troughs, and flanges can provide stiffness as well.
- Mounting details will include a wall-mounted support on the dead end, and a connection to the gullet wall on the open end. Typically, prefabricated troughs are mounted over the edge of the gullet wall for increased strength.

3.3 CONCRETE TROUGH OPTION

Another alternative is to use concrete troughs. For large filter projects, it may be economical for a concrete fabrication shop to set up formwork and fabricate these troughs off-site. This type of trough generally has a V-shaped bottom, as shown in the cross-section in **Figure 4**.

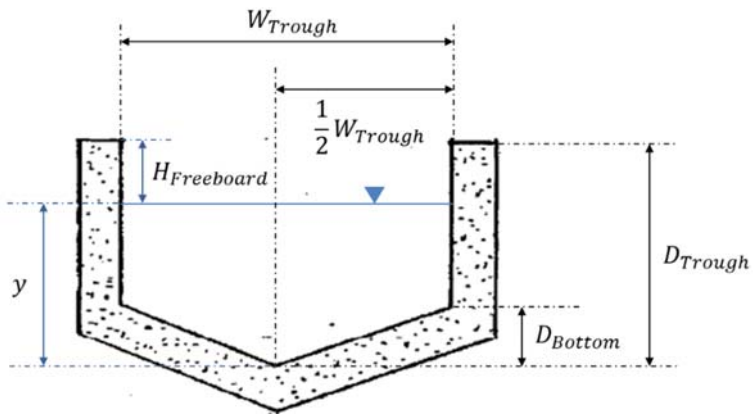

Figure 4: Trough Cross Section, Concrete Option.

For this option, the hydraulic analysis in **Appendix B** found:

- Six troughs, 7.6 m long
- Inside dimensions: 610 mm deep by 520 mm wide
- Outside dimensions: 685 mm deep by 670 mm wide, assuming concrete is 75 mm thick

The structural design for these troughs will be developed to support their installation:

- Key load cases will include both troughs full of water spanning an empty filter, and empty troughs subject to buoyant uplift in a full filter box.
- These load cases will be used to check the required rebar arrangement for sufficient strength, and the concrete thickness to provide adequate compressive strength and rebar cover. Concrete troughs are generally quite stiff and do not need supplemental stiffeners.
- Mounting details on the dead end and on the open end, where the troughs would be mounted over the edge of the gullet wall for increased strength. On both ends, rebars would be doweled into the walls and grouting between the wall and the prefabricated troughs.

4. BLOWER SIZING

4.1 KEY ASSUMPTIONS

During backwash, air supply for the air scour cycle is provided by blowers. These blowers must supply air at the design scour rate up to 59 m/hr, which corresponds to an airflow rate of 96.5 m^3/min for each filter cell. The air was assumed to be up to 45°C, which was used for the assumed air viscosity and density. The main headlosses that this blower must overcome include the static pressure of water in the filter box, along with losses in the air supply manifold piping.

4.2 BLOWER DESIGN PRESSURE

The water level in the filters corresponds to a static pressure of 17.7 kPa, and the estimated losses in the manifold piping are 8.8 kPa. This gives a total design pressure of 26.5 kPa. The flow rate of 96.5 m^3/min and pressure of 26.5 kPa serve as the sizing criteria for the blowers.

Appendix A
Filter Elevations

Seqwater - Mt. Crosby East Bank Filter Upgrades

Filter Elevation Tabulation

Abbreviations

BOD	Bottom of Deck	TOEW	Top of Existing Gullet Wall
BOT	Bottom of Trough	TOM	Top of Media
MF	Media Freeboard	TORW	Top of Raised Wall
MRP	Media Retention Plate	TOT	Top of Trough
TOD	Top of Deck	TOW	Top of Weir/Gullet Wall
TOEM	Top of Expanded Media	WSE	Water Surface Elevation

Media Properties		***Existing***	***Design***
Anthracite ES	mm		1.50
Sand ES	mm	0.95	0.65
Bed Expansion	%	26%	20%

Assumptions

Media Freeboard (MF) is defined as the distance between the expanded media and the bottom of the trough.

Elevations based on record drawings provided by Seqwater.

The deck is 12 inches = 305 mm thick.

Assume the top of the troughs will be 50 mm below the top of the gullet wall.

The goal between TOM and BOT is to enable 40% media expansion and 260 mm min expanded bed freeboard.

The selected Triton underdrain system has a total installed height of 150 mm.

	Existing		Final Design	
	Value (mm)	Elevation (m)	Value (mm)	Elevation (m)
Deck and Gullet Wall				
Top of Deck		118.090		118.090
Deck Thickness	305		305	
Bottom of Deck		117.785		117.785
Top of Existing Gullet Wall		116.535		116.535
TORW		116.535		**117.200**
Water Surface Elevation		117.600		117.600
Dist from Top of Wall to BOD	1250		585	
Dist from TOT to BOD	1402		765	
Troughs and Freeboard				
Dist from Top of Wall to TOT	152		180	
Dist from WSE to TOT	1217		580	
Dist from Floor to TOT	2033		2698	
TOT		116.383		**117.020**
Trough Depth	750		700	
Raise Trough / Gullet Wall			665	
BOT		115.633		116.320
TOM to BOT	174		520	
% Exp Space (30% goal)	29%		40%	
TOM		115.459		115.800
BOT		115.633		116.320
TOEM to BOT (230 mm goal)	18.0		260.0	
TOEM		115.615		116.060
Media and Underdrain				
Media Submergence	2141		1800	
Anthractite	0	115.459	900	115.800
Sand	600	115.459	400	114.900
Gravel / Support Layers	509	114.859	0	114.500
Underdrain		114.350	150	114.500
Filter Floor		114.350		114.350
L/d Ratio, Anthracite			600	
L/d Ratio, Sand	632		615	
L/d Ratio, Total	632		1215	

Appendix B
Trough Sizing Hydraulics

Mt Crosby East Bank Filter Rehab - Backwash Trough Sizing (SST Option)

Stantec

Calc by: MJA 19/11/2017
Check by: CP 23/11/2017
Update: MJA 12/06/2018

Backwash Parameters

Filter Geometry:

$L_{Filter} := 12.81\ m$

Existing filter box geometry

$W_{Filter} := 7.64\ m$

$A_{Filter} := L_{Filter} \cdot W_{Filter} = 97.87\ m^2$

Backwash Flow Rate:

$V_{BW} := 58\ \frac{m}{hr}$

Assumed maximum backwash velocity

$Q_{BW} := V_{BW} \cdot A_{Filter} = 1576.8\ \frac{L}{s}$

Trough Configuration

Definition Sketch - Cross Section:

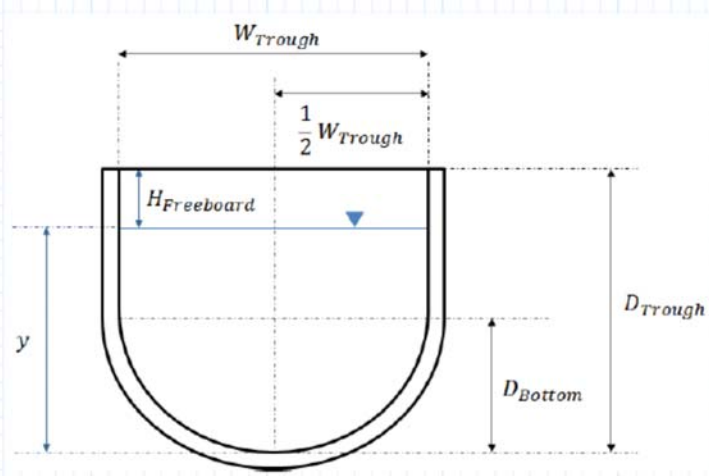

Definition Sketch - Longitudinal Section:

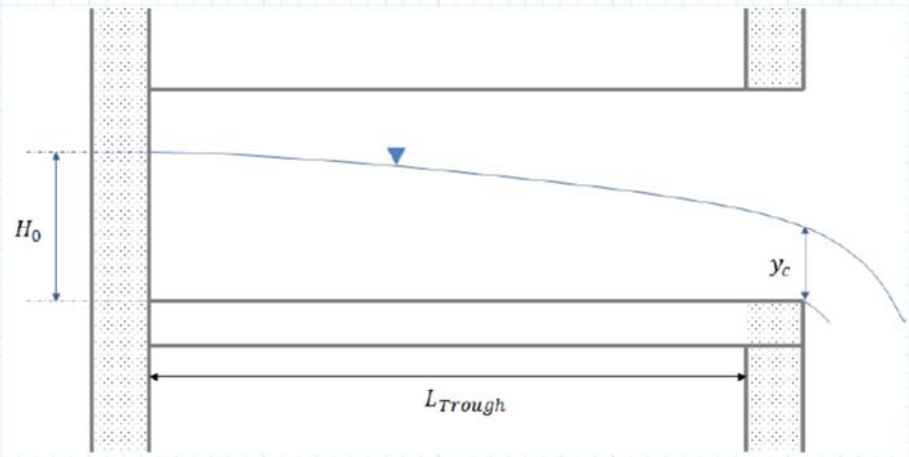

Design Configuration:

$N_{Troughs} := 6$ $W_{Trough} := 520\ mm$

$$Q_{Trough} := \frac{Q_{BW}}{N_{Troughs}}$$ $Q_{Trough} = 262.8\ \frac{L}{s}$

$$S_{Trough} := \frac{L_{Filter}}{N_{Troughs}}$$ $S_{Trough} = 2135\ mm$

Additional Assumptions:

- The troughs are stainless, with a Manning roughness coefficient of $n_{Trough} := 0.020$
- The troughs are $L_{Trough} := W_{Filter} = 7.6\ m$ long with bottom dia $D_{Bottom} := W_{Trough} = 520\ mm$
- A minimum freeboard of $H_{Freeboard} := 75\ mm$ will be required
- The trough wall thickness is $T_{Trough} := 2.5\ mm$

Required Trough Depth: Define Functions

Based on the method presented by Reynolds and Richards (1996), p. 311-313.

Flow Area and Wetted Perimeter:

$$A_{Flow}(y, W, D_{Bottom}) := \frac{1}{8} \cdot \pi \cdot D_{Bottom}^{\ 2} + W \cdot (y - D_{Bottom})$$

$$P_W(y, W, D_{Bottom}) := 2 \cdot (y - D_{Bottom}) + \frac{1}{2} \cdot \pi \cdot D_{Bottom}$$

Hydraulic Radius:

$$R_H(y, W, D_{Bottom}) := \frac{A_{Flow}(y, W, D_{Bottom})}{P_W(y, W, D_{Bottom})}$$

Flow Velocity:

$$V_{Flow}(Q, A_{Flow}) := \frac{Q}{A_{Flow}}$$

Critical Depth:

Depth y_c for which the Froude number $\frac{V_{Flow}}{\sqrt{g \cdot \frac{A_{Flow}}{W_{Trough}}}} = 1$

$$y_c(Q, W, D_{Bottom}) := \mathbf{root}\left(1 - \frac{V_{Flow}(Q, A_{Flow}(y_{c0}, W, D_{Bottom}))}{\sqrt{g \cdot \frac{A_{Flow}(y_{c0}, W, D_{Bottom})}{W}}}, y_{c0}\right)$$

Upstream Depth (Camp equation):

$$C_F(Q, W, L, n, y_c, y_{Avg}, R_{H.Avg}) := \left(\frac{n^2 \cdot \left(\frac{L}{m}\right) \cdot \left(\frac{Q}{\frac{m^3}{s}}\right)^2}{\left(\frac{W}{m}\right)^2 \cdot \left(\frac{R_{H.Avg}}{m}\right)^{\frac{4}{3}} \cdot \left(\frac{y_{Avg}}{m}\right)}\right) \cdot m^2$$

Factor accounting for channel friction losses.

$$H_0(Q, W, L, n, y_c, y_{Avg}, R_{H.Avg}) := \sqrt{y_c^2 + \frac{2 \cdot Q^2}{g \cdot W^2 \cdot y_c} + \frac{2}{3} \cdot C_F(Q, W, L, n, y_c, y_{Avg}, R_{H.Avg})}$$

Average Depth:

$$y_{Avg}(H_0, y_c) := H_0 - \frac{1}{3} \cdot (H_0 - y_c)$$

Assumes a parabolic water surface

Solve for Required Trough Depth and Dimensions

Critical Depth:

$$y_{c.Trough} := y_c(Q_{Trough}, W_{Trough}, D_{Bottom}) = 612.2\ mm$$

Average Depth:

Upstream depth equation with design values - only variables are depth and hydraulic radius:

$$H_{0.Design}(y, R_H) := H_0(Q_{Trough}, W_{Trough}, L_{Trough}, n_{Trough}, y_{c.Trough}, y, R_H)$$

Iterative solution for the average depth y_{Avg} :

$$y_{Avg.Trough} := \mathbf{root}\left(y_{Avg}\left(H_{0.Design}\left(y_0, R_H\left(y_0, W_{Trough}, D_{Bottom}\right)\right), y_{c.Trough}\right) - y_0, y_0\right) = 660.5\ mm$$

Maximum Flow Depth and Minimum Trough Depth:

Solve the average depth equation for H_0 :

$$H_{0.Trough} := \frac{1}{2} \cdot \left(3 \cdot y_{Avg.Trough} - y_{c.Trough}\right) \qquad H_{0.Trough} = 684.6\ mm$$

$$D_{TroughMin} := H_{0.Trough} + H_{Freeboard} \qquad D_{TroughMin} = 759.6\ mm$$

Actual Trough Dimensions:

$$D_{Trough} := \mathrm{ceil}\left(\frac{D_{TroughMin}}{10\ mm}\right) \cdot 10\ mm$$

$$D_{TroughOutside} := D_{Trough} + T_{Trough} \qquad W_{TroughOutside} := W_{Trough} + 2 \cdot T_{Trough}$$

The inside dimensions of the troughs are $D_{Trough} = 760\ mm$ by $W_{Trough} = 520\ mm$.

The outside dimensions of the troughs are $D_{TroughOutside} = 762.5\ mm$ by $W_{TroughOutside} = 525\ mm$

Percentage Cover of Filter Area:

$$A_{Troughs} := N_{Troughs} \cdot W_{TroughOutside} \cdot W_{Filter} = 259\ ft^2$$

$$Cover := \frac{A_{Troughs}}{A_{Filter}} \qquad Cover = 24.6\%$$

Calculate Water Level During Backwash

Weir Headloss Equation:

$\Pi_{vc} := 0.62$ Vena contracta area ratio

$$HL_{Weir}(Q, L) := \left(\frac{3}{2} \cdot \frac{Q}{\Pi_{vc} \cdot \sqrt{2 \cdot g} \cdot L}\right)^{\frac{2}{3}}$$

Headloss over Trough Weir:

$L_{Weir.Total} := N_{Troughs} \cdot 2 \cdot L_{Trough} = 300.8\ ft$

$HL_{Trough.Weir} := HL_{Weir}(Q_{BW}, L_{Weir.Total})$ $HL_{Trough.Weir} = 44.5\ mm$

Backwash Water Elevation:

$EL_{TOT} := 117.02\ m$ Top of trough elevation

$TWL_{BW} := EL_{TOT} + HL_{Trough.Weir}$ $TWL_{BW} = 117.06\ m$

Mt Crosby East Bank Filter Rehab - Backwash Trough Sizing (Concrete Option)

Stantec

Calc by: MJA 19/11/2017
Check by: CP 23/11/2017
Update: MJA 12/06/2018

Backwash Parameters

Filter Geometry:

$L_{Filter} := 12.81\ m$

Existing filter box geometry

$W_{Filter} := 7.64\ m$

$A_{Filter} := L_{Filter} \cdot W_{Filter} = 97.87\ m^2$

Backwash Flow Rate:

$V_{BW} := 58\ \frac{m}{hr}$

Assumed maximum backwash velocity

$Q_{BW} := V_{BW} \cdot A_{Filter} = 1576.8\ \frac{L}{s}$

Trough Configuration

Definition Sketch - Cross Section:

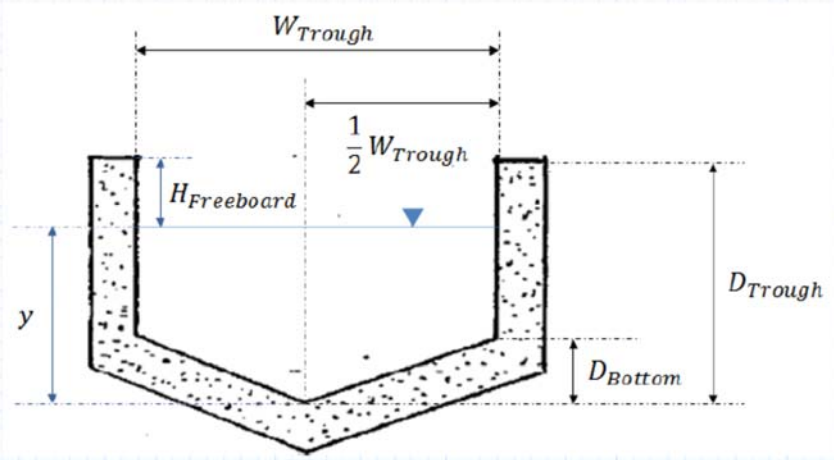

Definition Sketch - Longitudinal Section:

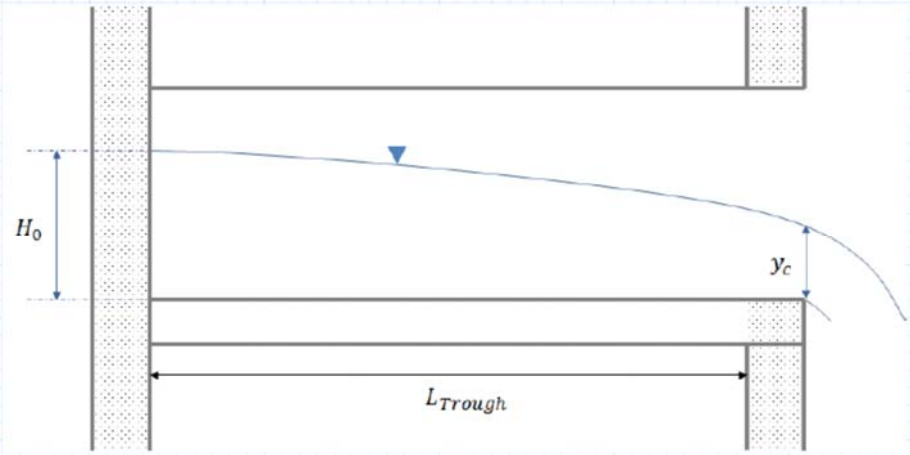

Design Configuration:

$N_{Troughs} := 6$

$W_{Trough} := 520\ mm$

$$Q_{Trough} := \frac{Q_{BW}}{N_{Troughs}}$$

$$Q_{Trough} = 262.8\ \frac{L}{s}$$

$$S_{Trough} := \frac{L_{Filter}}{N_{Troughs}}$$

$$S_{Trough} = 2135\ mm$$

Additional Assumptions:

- The troughs are concrete, with a Manning roughness coefficient of $n_{Trough} := 0.020$
- The troughs are $L_{Trough} := W_{Filter} = 7.6\ m$ long with bottoms $D_{Bottom} := 100\ mm$ deep
- A minimum freeboard of $H_{Freeboard} := 75\ mm$ will be required
- The trough wall thickness is $T_{Trough} := 75\ mm$

Required Trough Depth: Define Functions

Based on the method presented by Reynolds and Richards (1996), p. 311-313.

Flow Area and Wetted Perimeter:

$$A_{Flow}(y, W, D_{Bottom}) := \frac{1}{2} \cdot W \cdot D_{Bottom} + W \cdot (y - D_{Bottom})$$

$$P_W(y, W, D_{Bottom}) := 2 \cdot (y - D_{Bottom}) + 2 \cdot \sqrt{\left(\frac{1}{2} \cdot W\right)^2 + (D_{Bottom})^2}$$

Hydraulic Radius:

$$R_H(y, W, D_{Bottom}) := \frac{A_{Flow}(y, W, D_{Bottom})}{P_W(y, W, D_{Bottom})}$$

Flow Velocity:

$$V_{Flow}(Q, A_{Flow}) := \frac{Q}{A_{Flow}}$$

Critical Depth:

Depth y_c for which the Froude number $\frac{V_{Flow}}{\sqrt{g \cdot \frac{A_{Flow}}{W_{Trough}}}} = 1$

$$y_c(Q, W, D_{Bottom}) := \mathbf{root}\left(1 - \frac{V_{Flow}(Q, A_{Flow}(y_{c0}, W, D_{Bottom}))}{\sqrt{g \cdot \frac{A_{Flow}(y_{c0}, W, D_{Bottom})}{W}}}, y_{c0}\right)$$

Upstream Depth (Camp equation):

$$C_F(Q, W, L, n, y_c, y_{Avg}, R_{H.Avg}) := \left(\frac{n^2 \cdot \left(\frac{L}{m}\right) \cdot \left(\frac{Q}{\frac{m^3}{s}}\right)^2}{\left(\frac{W}{m}\right)^2 \cdot \left(\frac{R_{H.Avg}}{m}\right)^{\frac{4}{3}} \cdot \left(\frac{y_{Avg}}{m}\right)}\right) \cdot m^2$$

Factor accounting for channel friction losses.

$$H_0(Q, W, L, n, y_c, y_{Avg}, R_{H.Avg}) := \sqrt{y_c^2 + \frac{2 \cdot Q^2}{g \cdot W^2 \cdot y_c} + \frac{2}{3} \cdot C_F(Q, W, L, n, y_c, y_{Avg}, R_{H.Avg})}$$

Average Depth:

$$y_{Avg}(H_0, y_c) := H_0 - \frac{1}{3} \cdot (H_0 - y_c)$$

Assumes a parabolic water surface

Solve for Required Trough Depth and Dimensions

Critical Depth:

$$y_{c.Trough} := y_c(Q_{Trough}, W_{Trough}, D_{Bottom}) = 346.4\ mm$$

Average Depth:

Upstream depth equation with design values - only variables are depth and hydraulic radius:

$$H_{0.Design}(y, R_H) := H_0(Q_{Trough}, W_{Trough}, L_{Trough}, n_{Trough}, y_{c.Trough}, y, R_H)$$

Iterative solution for the average depth y_{Avg} :

$$y_{Avg.Trough} := \mathbf{root}\left(y_{Avg}\left(H_{0.Design}\left(y_0, R_H\left(y_0, W_{Trough}, D_{Bottom}\right)\right), y_{c.Trough}\right) - y_0, y_0\right) = 469.7\ mm$$

Maximum Flow Depth and Minimum Trough Depth:

Solve the average depth equation for H_0 :

$$H_{0.Trough} := \frac{1}{2} \cdot \left(3 \cdot y_{Avg.Trough} - y_{c.Trough}\right) \qquad H_{0.Trough} = 531.3\ mm$$

$$D_{TroughMin} := H_{0.Trough} + H_{Freeboard} \qquad D_{TroughMin} = 606.3\ mm$$

Actual Trough Dimensions:

$$D_{Trough} := \mathrm{ceil}\left(\frac{D_{TroughMin}}{10\ mm}\right) \cdot 10\ mm$$

$$D_{TroughOutside} := D_{Trough} + T_{Trough} \qquad W_{TroughOutside} := W_{Trough} + 2 \cdot T_{Trough}$$

The inside dimensions of the troughs are $D_{Trough} = 610\ mm$ by $W_{Trough} = 520\ mm$.

The outside dimensions of the troughs are $D_{TroughOutside} = 685\ mm$ by $W_{TroughOutside} = 670\ mm$

Percentage Cover of Filter Area:

$$A_{Troughs} := N_{Troughs} \cdot W_{TroughOutside} \cdot W_{Filter} = 330.6\ ft^2$$

$$Cover := \frac{A_{Troughs}}{A_{Filter}} \qquad Cover = 31.4\%$$

Calculate Water Level During Backwash

Weir Headloss Equation:

$\Pi_{vc} := 0.62$ Vena contracta area ratio

$$HL_{Weir}(Q, L) := \left(\frac{3}{2} \cdot \frac{Q}{\Pi_{vc} \cdot \sqrt{2 \cdot g} \cdot L}\right)^{\frac{2}{3}}$$

Headloss over Trough Weir:

$L_{Weir.Total} := N_{Troughs} \cdot 2 \cdot L_{Trough} = 300.8\ ft$

$HL_{Trough.Weir} := HL_{Weir}(Q_{BW}, L_{Weir.Total})$ $HL_{Trough.Weir} = 44.5\ mm$

Backwash Water Elevation:

$EL_{TOT} := 117.02\ m$ Top of trough elevation

$TWL_{BW} := EL_{TOT} + HL_{Trough.Weir}$ $TWL_{BW} = 117.06\ m$

Appendix C
Blower Sizing

Calculation of Air Blower Design Pressure

Description	Pressure Loss	Comments
Manifold	8.80 kPa	Ref 'Manifold Pressure Loss
Dropper		
Diffuser	0.00 kPa	To be confirmed from supplier
Orifice	0.00 kPa	To be confirmed from supplier
Grid	0.00 kPa	To be confirmed from supplier
Others		
Control Valve	0.00 kPa	
Fouling Allowance	0.00 kPa	
Static Pressure	17.70 kPa	From top of diffusers to TWL
Air Blower Design Pressure	**26.50 kPa**	

MANIFOLD PRESSURE LOSS

Line Description	SECTION A	SECTION B	SECTION C	SECTION D	SECTION E	SECTION F	SECTION G	SECTION H	SECTION I	SECTION J
Air Properties										
Max Air Temp	45 deg C	45 deg C	45 deg C	45 deg C	45 deg C	45 deg C	45 deg C	45 deg C	45 deg C	45 deg C
Dynamic Viscosity (Refer 'Properties of Air')	1.82E-05 kg/m-s	1.82E-05 kg/m-s	1.82E-05 kg/m-s	1.82E-05 kg/m-s	1.82E-05 kg/m-s	1.82E-05 kg/m-s	1.82E-05 kg/m-s	1.82E-05 kg/m-s	1.82E-05 kg/m-s	1.82E-05 kg/m-s
Density (Refer 'Properties of Air')	1.2 kg/cu.m	1.2 kg/cu.m	1.2 kg/cu.m	1.2 kg/cu.m	1.2 kg/cu.m	1.2 kg/cu.m	1.2 kg/cu.m	1.2 kg/cu.m	1.2 kg/cu.m	1.2 kg/cu.m
Flow Rate										
Max Flowrate	96.5 cu.m/min	96.5 cu.m/min	96.5 cu.m/min	96.5 cu.m/min	96.5 cu.m/min	96.5 cu.m/min	0.0 cu.m/min	0.0 cu.m/min	0.0 cu.m/min	0.0 cu.m/min
[cu.m/s]	1.6 cu.m/min	1.6 cu.m/min	1.6 cu.m/min	1.6 cu.m/min	1.6 cu.m/min	1.6 cu.m/min	0.0 cu.m/min	0.0 cu.m/min	0.0 cu.m/min	0.0 cu.m/min
	1608.7 l/s	1608.7 l/s	1608.7 l/s	1608.7 l/s	1608.7 l/s	1608.7 l/s	0.0 l/s	0.0 l/s	0.0 l/s	0.0 l/s
Pipe Line Details										
Pipe Material	316 ss	316 ss	316 ss	316 ss	316 ss	316 ss	316 ss	316 ss	316 ss	316 ss
Inside Diameter	350 mm	350 mm	350 mm	350 mm	350 mm	350 mm	350 mm	350 mm	350 mm	350 mm
Pipe Length	4.0 m	45.0 m	6.0 m	30.0 m	90.0 m	8.0 m	0.0 m	0.0 m	0.0 m	0.0 m
Pipe K -Value (Refer Pipe Surface Roughness')	0.15 mm	0.15 mm	0.15 mm	0.15 mm	0.15 mm	0.15 mm	0.15 mm	0.15 mm	0.15 mm	0.15 mm
PRESSURE LOSS CALCULATION										
Gravity	9.81 m/sq.s	9.81 m/sq.s	9.81 m/sq.s	9.81 m/sq.s	9.81 m/sq.s	9.81 m/sq.s	9.81 m/sq.s	9.81 m/sq.s	9.81 m/sq.s	9.81 m/sq.s
Kinematic Viscosity	1.510E-05 sq.m/s	1.510E-05 sq.m/s	1.510E-05 sq.m/s	1.510E-05 sq.m/s	1.510E-05 sq.m/s	1.510E-05 sq.m/s	1.510E-05 sq.m/s	1.510E-05 sq.m/s	1.510E-05 sq.m/s	1.510E-05 sq.m/s
Reynold's Number	387465	387465	387465	387465	387465	387465	0	0	0	0
Flow Type	Turbulent Flow	Turbulent Flow	Turbulent Flow	Turbulent Flow	Turbulent Flow	Turbulent Flow	Laminar Flow	Laminar Flow	Laminar Flow	Laminar Flow
Design Flowrate	1608.7 l/s	1608.7 l/s	1608.7 l/s	1608.7 l/s	1608.7 l/s	1608.7 l/s	0.0 l/s	0.0 l/s	0.0 l/s	0.0 l/s
Fluid Velocity	16.72 m/s	16.72 m/s	16.72 m/s	16.72 m/s	16.72 m/s	16.72 m/s	0.00 m/s	0.00 m/s	0.00 m/s	0.00 m/s
Duct Pressure Loss										
METHOD : COLEBROOK-WHITE / DARCY EQUATION										
Colebrook-White Equation										
This original formula is implicit in friction factor 'f' and it must be solved by trial and error. Thus, Swamee-Jain equation is used here for the approximation.	$\frac{1}{\left(\sqrt{f}\right)} = -4\cdot\log\left[\frac{\frac{k}{D}}{3.7065} + \frac{1.2613}{Re\cdot\sqrt{f}}\right]$ k=Roughness in feet D=inside diameter in feet Re= Reynolds number									
Darcy Equation	Pf = (f/D)*(ρV²/2)* L									
Friction Factor	1.7575E-02	1.7575E-02	1.7575E-02	1.7575E-02	1.7575E-02	1.7575E-02	#DIV/0!	#DIV/0!	#DIV/0!	#DIV/0!
Hydraulic Gradient	8.46E+00 Pa/m	8.46E+00 Pa/m	8.46E+00 Pa/m	8.46E+00 Pa/m	8.46E+00 Pa/m	8.46E+00 Pa/m	#DIV/0!	#DIV/0!	#DIV/0!	#DIV/0!
Pressure Loss	33.83 Pa	380.62 Pa	50.75 Pa	253.75 Pa	761.24 Pa	67.67 Pa	#DIV/0!	#DIV/0!	#DIV/0!	#DIV/0!
Fittings Pressure Loss										
Velocity Pressure Head	1.68E+02 m	1.68E+02 m	1.68E+02 m	1.68E+02 m	1.68E+02 m	1.68E+02 m	0.00E+00 m	0.00E+00 m	0.00E+00 m	0.00E+00 m
Total K-Value Of Fittings (ref. Fittings for Sections)	4.85	4.95	3.90	1.50	8.70	19.18	0.00	0.00	0.00	0.00
Pressure Loss	816.95 Pa	833.80 Pa	656.93 Pa	252.67 Pa	1465.46 Pa	3230.43 Pa	0.00 Pa	0.00 Pa	0.00 Pa	0.00 Pa
	SECTION A	**SECTION B**	**SECTION C**	**SECTION D**	**SECTION E**	**SECTION F**	**SECTION G**	**SECTION H**	**SECTION I**	**SECTION J**
Duct Pressure Loss	33.833 Pa	380.621 Pa	50.749 Pa	253.747 Pa	761.242 Pa	67.666 Pa	#DIV/0!	#DIV/0!	#DIV/0!	#DIV/0!
Fittings Pressure Loss	816.952 Pa	833.796 Pa	656.930 Pa	252.665 Pa	1465.460 Pa	3230.426 Pa	0.000 Pa	0.000 Pa	0.000 Pa	0.000 Pa
Total Pressure Loss	0.851 kPa	1.214 kPa	0.708 kPa	0.506 kPa	2.227 kPa	3.298 kPa	#DIV/0!	#DIV/0!	#DIV/0!	#DIV/0!
OVER-ALL PRESSURE LOSS	8.804 kPa									

Technical Memo

Project:	**Mt Crosby East Bank WTP Filter Refurbishment**	*Project Code:*	83504178
Date:	20/06/2018	*Memo No.:*	17
To:	Bart Vervetjes, Seqwater		
From:	Steve Moore		
Subject:	**Backwash Header Replacement**		

Rev. No.	Date	Description	Prepared By	Checked By	Reviewed By	Approved By
1	20/06/2018	Draft	IH	SM		SM

1. INTRODUCTION

Stantec has been engaged by Seqwater to provide engineering design services for the filter refurbishment works at the Mt Crosby East Bank WTP. Construction works for this project will include replacement of the DN600 steel backwash main in filter stages 1 & 2, which provides washwater to Filters 1 through 12. An initial design for this piping was completed as approved IFC by Cardno in 2015. This technical memorandum outlines the general requirements for construction of the backwash main and lists necessary updates to the Cardno design under the Mount Crosby East Bank WTP Filter Upgrades Project.

2. CONSTRUCTION SEQUENCE

The backwash pipework is currently configured in a ring main around all four filter stages. There are existing isolation valves on the backwash header to isolate Stage 1&2 and Stage 3&4. Work on the backwash header will be performed concurrently with the filter refurbishment work (six filters at a time). This task can be broken up into two phases:

1. Backwash Header Isolation –close the upstream and downstream isolation valves to install a new isolation valve and blind flange between Stage 1 and Stage 2. 12 filters will be offline during the isolating valve installation

2. Backwash Header Replacement – with the backwash line for a bank of six filters isolated, existing backwash line servicing Stage 1 can be demolished and the new pipe installed up to the mating flange on the new valve.

3. On completion of Stage 1 filter refurbishment, the Stage 2 section of header to be replaced

An overall schematic of the backwash ring main is shown below in Figure 1. Phases 1 and 2 of the backwash main replacement are highlighted in green and blue respectively.

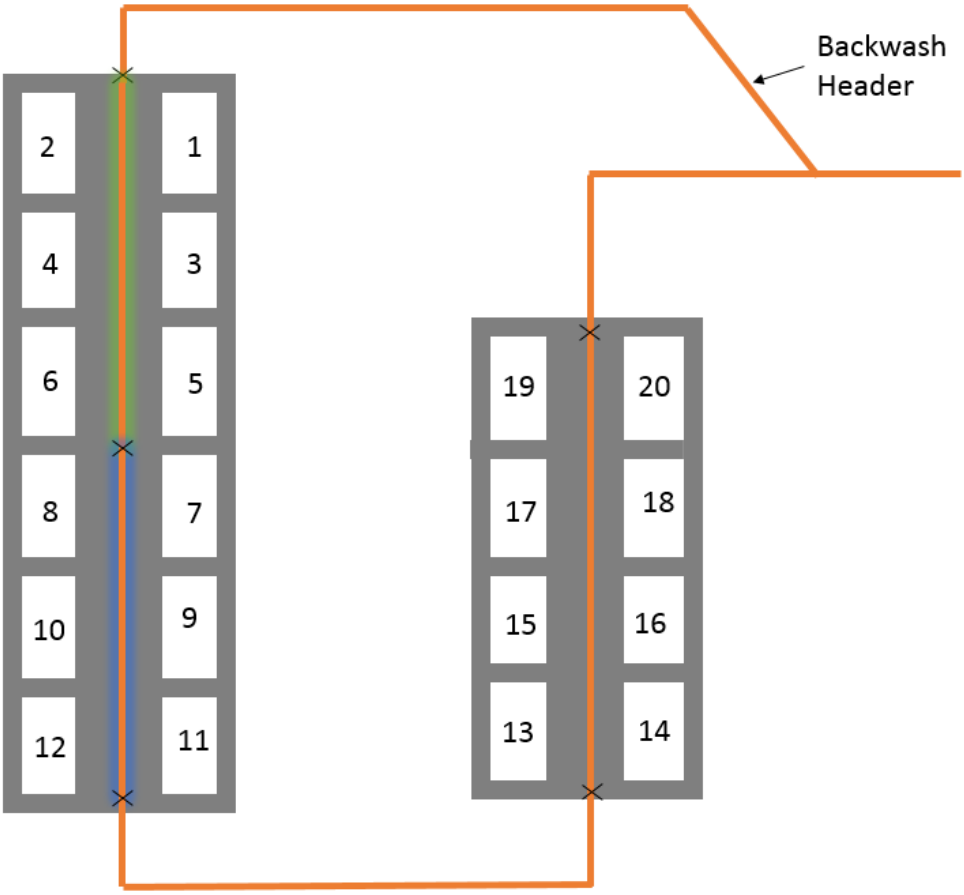

Figure 1 Backwash Main Schematic

3 HYDRAULICS

During construction of the new portion of backwash pipe, sections of the line will be isolated and it will no longer function as a ring main (i.e. all backwash flow will travel in one direction through the line). This condition was modeled using HADES, Stantec's internal software for hydraulic calculations, to ensure that adequate backwash flow can be provided during construction. Figure 2, below, illustrates the layout of the system in HADES for the modelled scenario—backwashing filter 8 with the ring main out of service.

4 PROCESS IMPACTS

Once a section of backwash header is replaced, there will be no surface wash connections to the new

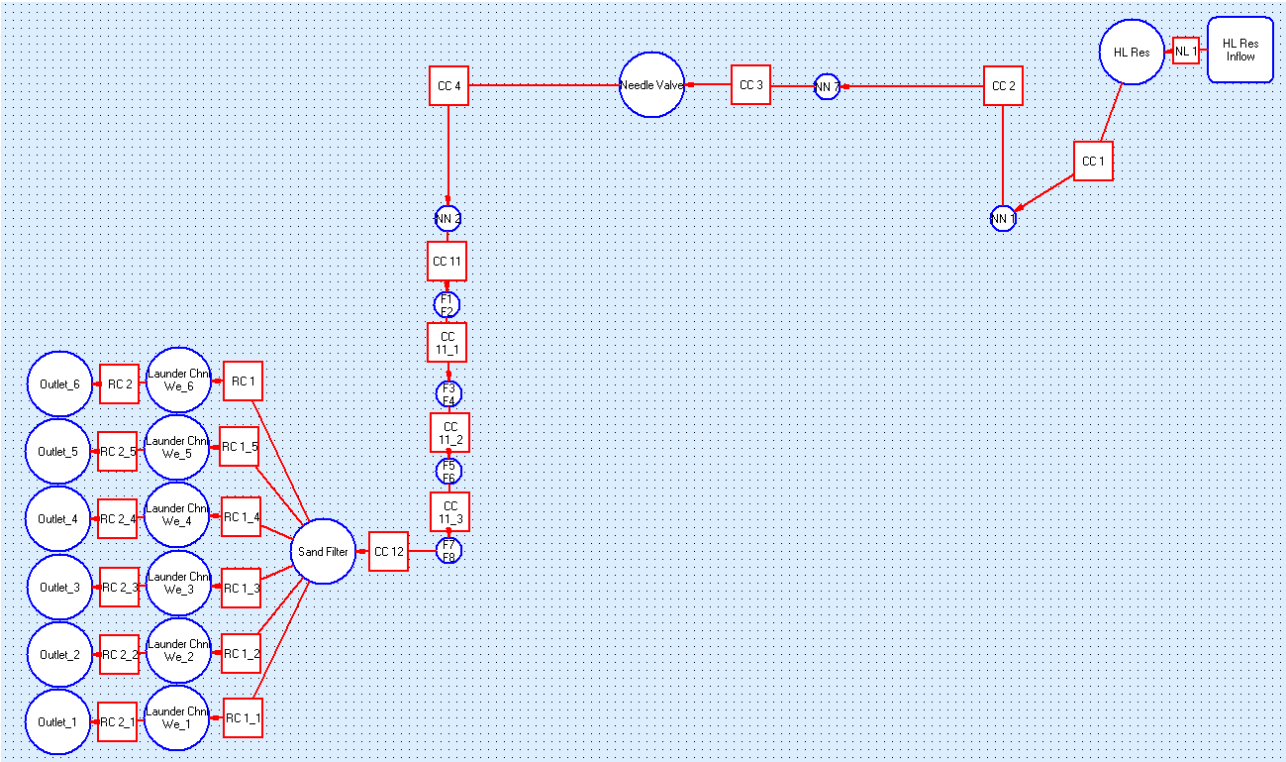

Figure 2 HADES Calculation Layout

The hydraulic model of the backwash system consists of a delivery main from the High Level Reservoir that transfers clean water to the backwash ring main and a needle valve to control the flowrate to the backwash. Based on the model calculations, there is adequate driving head to provide the required flowrate to backwash Filter 8 (worst case scenario during construction). The model was run with the following inputs, shown in Table 1. Under this scenario the control valve will be fully open or near fully open.

Table 1 Hydraulic Model Inputs

Parameter	Value
Backwash Flow	1500 L/s*
High Level Reservoir TWL	138 m AHD approx
Needle Valve H_L (100% open)	6.1m

* 1,500 L/s is the maximum required backwash flow.

Figure 3, below shows the hydraulic profile from the high level reservoir to Outlet 6 (Filter 8) at 1500L/s flow rate

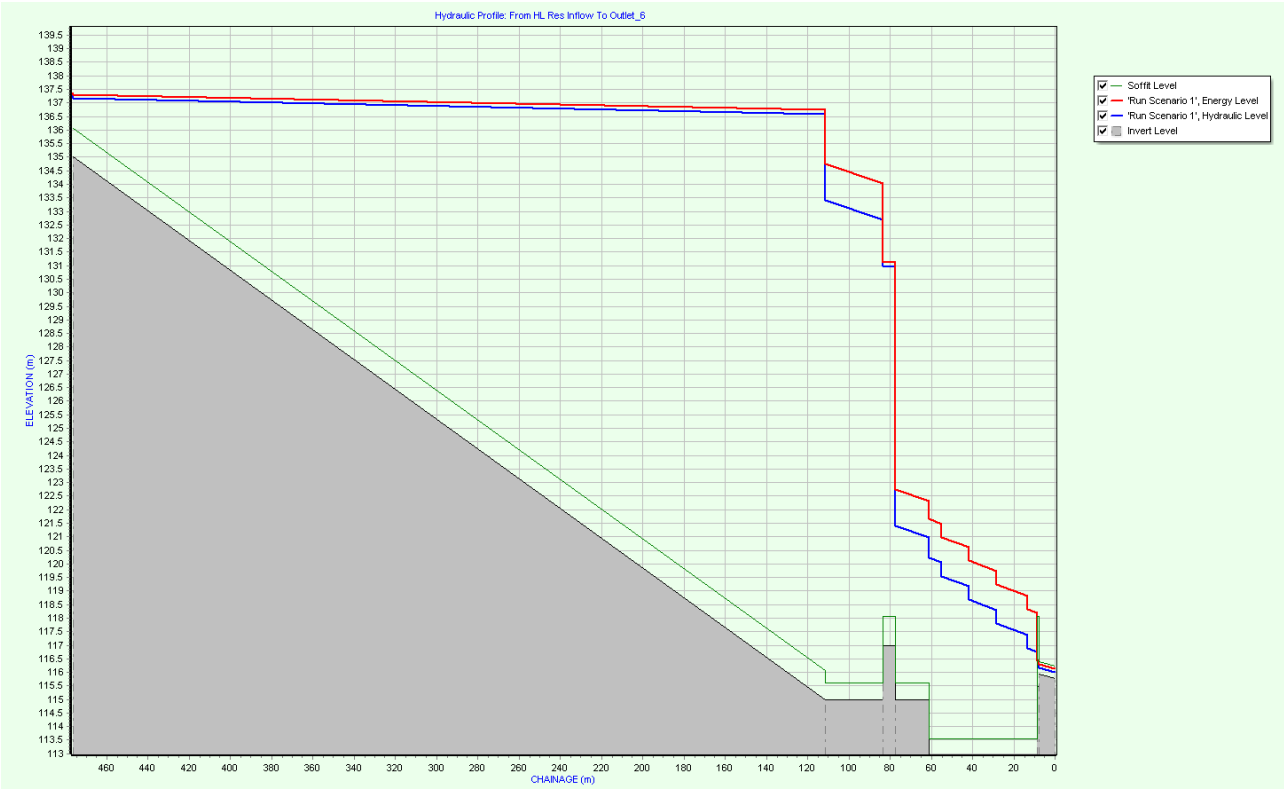

Figure 3 Hydraulic Profile

4. CARDNO DESIGN REVIEW

5.1 DRAWING MODIFICATIONS

Stantec reviewed revision 2 of the Cardno design (Issued for Construction 20/04/2015). The Cardno drawings require the following updates:

1. **Remove/Relocate Isolation Valves** - The Cardno drawings show two isolation valves, separating banks of four filters each. Since the revised construction sequence, as part of the Filter Upgrades Project, is to construct the backwash main in two segments (isolating between banks of six filters) only one valve is required. This valve will be installed between the branch to filters 5&6 and that to filters 7&8, and will mate up to an existing flange in the gallery, providing isolation between Stage 1 and Stage 2
2. **Additional Pressure Indicating Transmitters** – Stantec recommends including three PE/PITs along the ring main which will allow Seqwater to trend washwater pressure overtime. Steady increases in washwater pressure can indicate blockages in the underdrains, so the new PE/PITs will help to meter underdrain performance and plan maintenance activities. Of the new PE/PITs, one will be installed within the Stage 1&2 piping gallery, and should be added to the Cardno drawing set.

Stantec proposes that these modifications be made to the existing Cardno drawings, with all changes clouded. Stantec would issue a revision of these drawings for construction under the Filter Upgrades Project.

5.2 CONSTRUCTABILITY

The Cardno drawings were also reviewed for overall constructability. A site walk took place on the 15th of June, 2018 to identify any new obstructions or issues lifting pipe sections in and out of the gallery, put in after the Cardno design was issued. Overall, the Cardno design remains viable—the longest pipe spool is 4400mm long, which can be maneuvered into the gallery from the East end of the gallery. The contractor may require to install guide beams or lifting points to assist with moving the pipe through the gallery. Any beams installed for lifting during installation will be retained as permanent lifting points. Specification requirements will require materials, corrosion protection and fixings to be suitable for permanent installations. Lifting gear (block and chain) will not be permanent

One section of cable tray, between filters 5, 6, 7 and 8, was noted to run perpendicular to the backwash pipe—shown below in Figure 4. The contractor should take care when working around this cable ladder.

Figure 4 Existing Backwash Pipe in Gallery

5.3 PIPE MATERIAL

The Cardno design is developed for MSCL pipes. It is proposed to retain this as the design pipe material, however Grade 316 Stainless steel (Schedule 10) may provide benefits in the construction of the header (lighter and more maneuverable for installation), as well as improved long term corrosion resistance. It is proposed to allow SS pipe as an alternative in the tender for the works.

6 CONCLUSIONS

- The Cardno design remains suitable for installation as documented excepting that a single isolation valve (butterfly valve) is to be located between Stage 1 and Stage 2
- MSCL pipe to be the base design as documented, with tendering to allow Grade 316 SS Schedule 10 as an alternative
- Any lifting points/beams required for installation to remain as permanent, lifting gear to be removed
- Additional instrumentation of pressure transducers to be installed on back wash header.