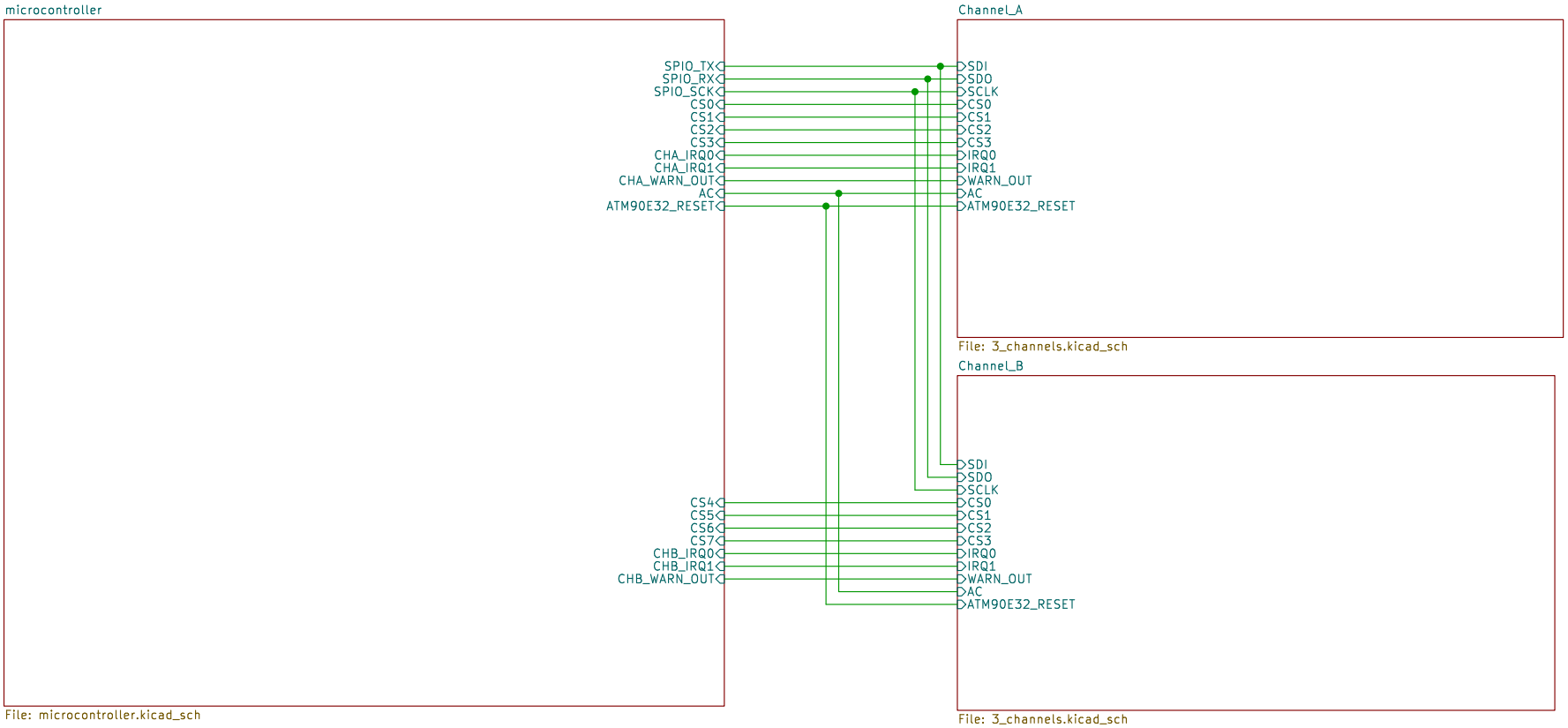

PCB Changes
2.0 – 2.1
– Connected an MCU GPIO (19) pin to reset ATM90E32 devices.

1.9 – 2.0
– 1.2mm DC power connector pin holes are now all the same size.
– Added a jumper on the PCB to allow the voltage offset to be calibrated if required.

1.8 – 1.9
– Added ability to power down the display to save power.

1.7 – 1.8
Changes thermal reliefs to ease soldering during MFG.

Sheet: /
File: ct_meter.kicad_sch

Title: 6 Channel CT Sensor Meter

Size: A4	Date: 2024-01-20	**Rev: 2.1**
KiCad E.D.A. kicad 7.0.5-7.0.5~ubuntu20.04.1		Id: 1/4

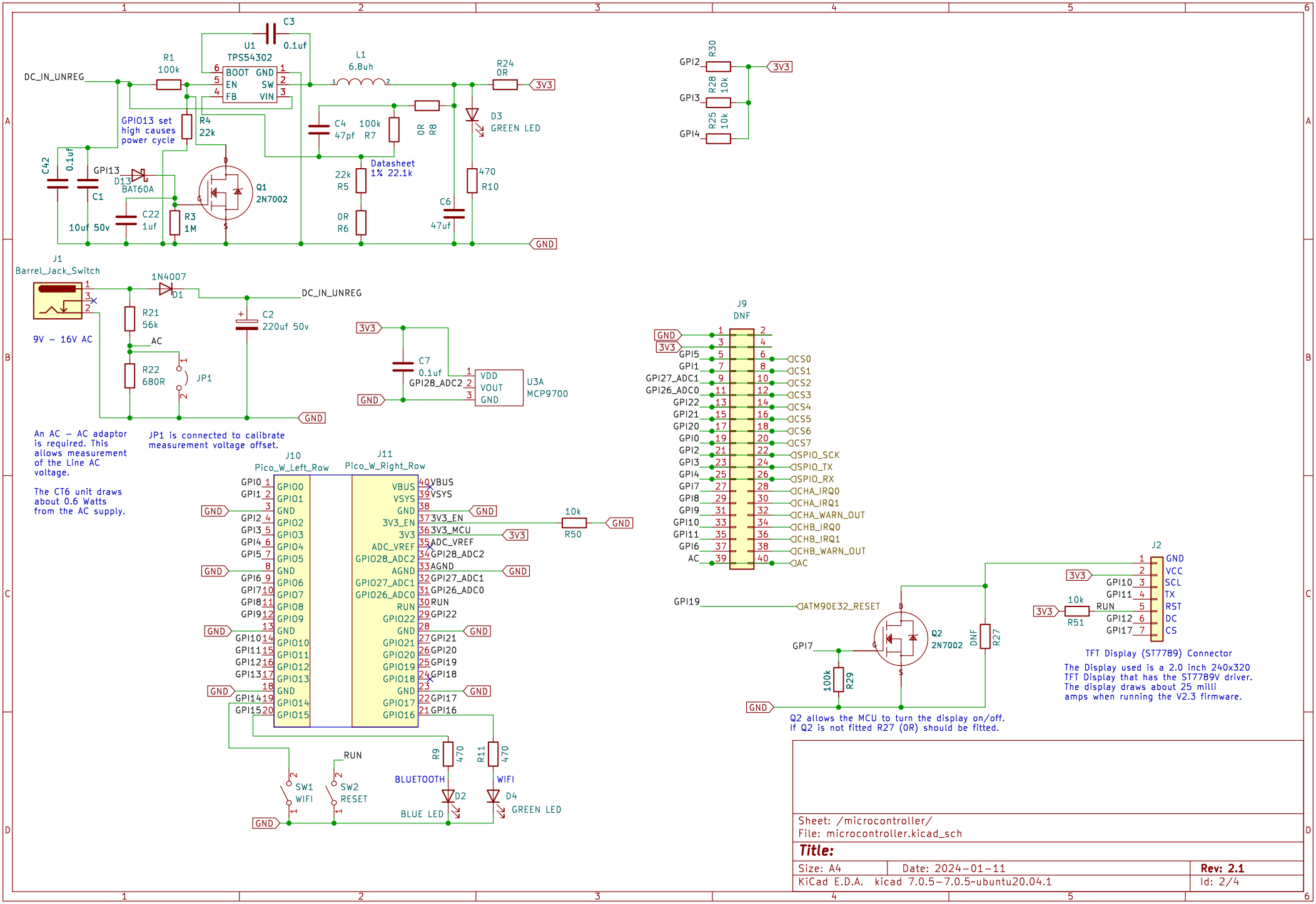

Sheet: /microcontroller/
File: microcontroller.kicad_sch

Title:

Size: A4	Date: 2024-01-11	**Rev: 2.1**
KiCad E.D.A. kicad 7.0.5-7.0.5~ubuntu20.04.1		Id: 2/4

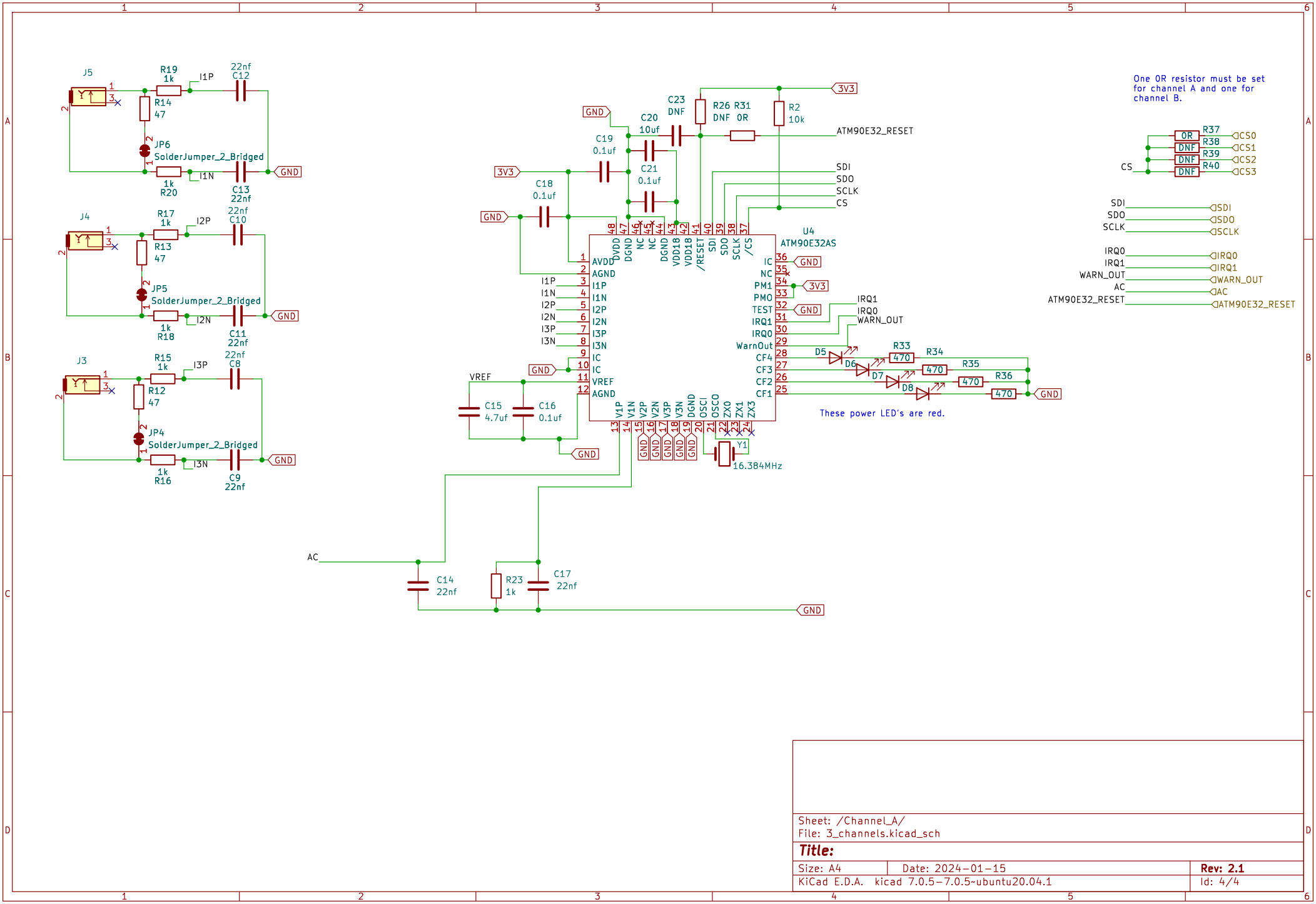

Sheet: /Channel_A/
File: 3_channels.kicad_sch

Title:

Size: A4	Date: 2024-01-15	**Rev: 2.1**
KiCad E.D.A. kicad 7.0.5-7.0.5~ubuntu20.04.1		Id: 4/4

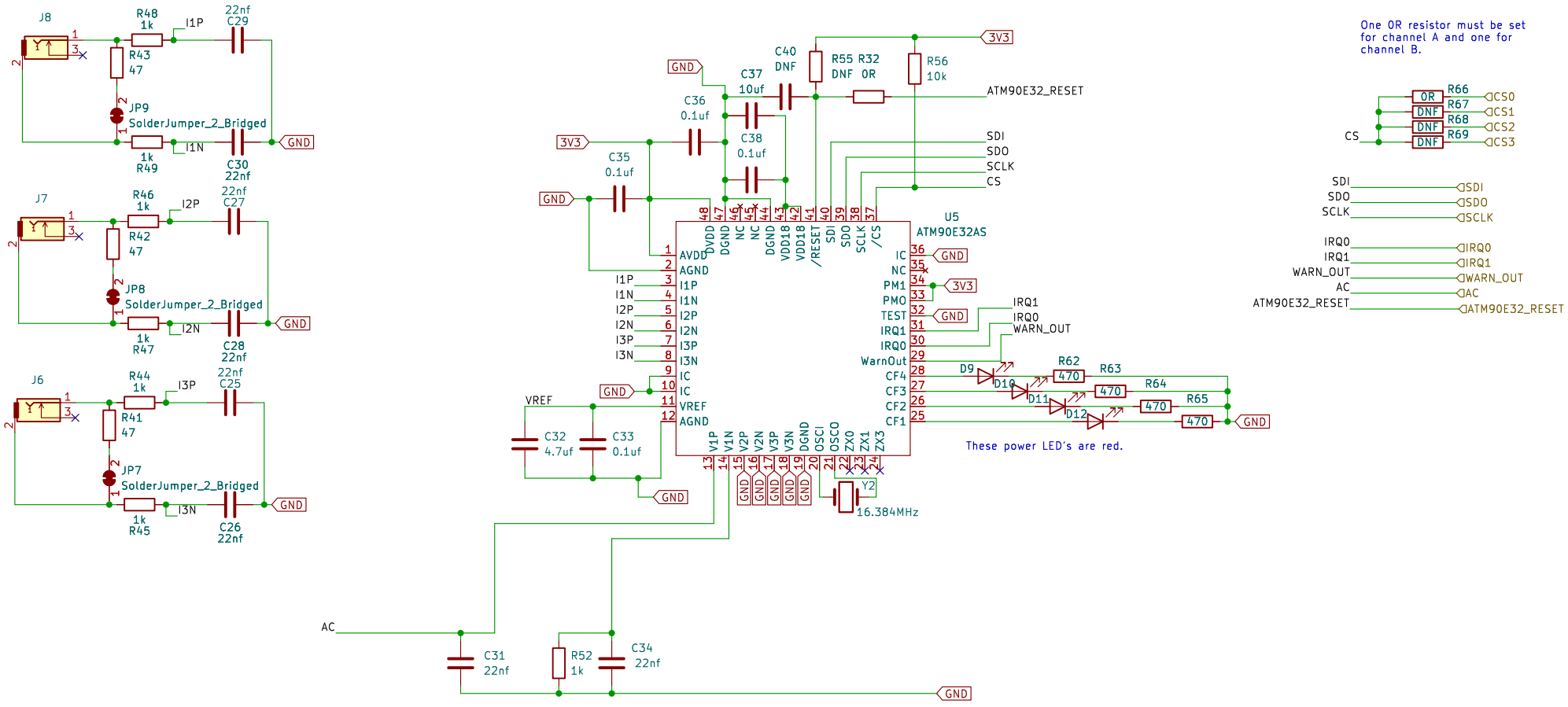

Sheet: /Channel_B/
File: 3_channels.kicad_sch

Title:

Size: A4	Date: 2024-01-15	**Rev: 2.1**
KiCad E.D.A. kicad 7.0.5-7.0.5~ubuntu20.04.1		Id: 5/4