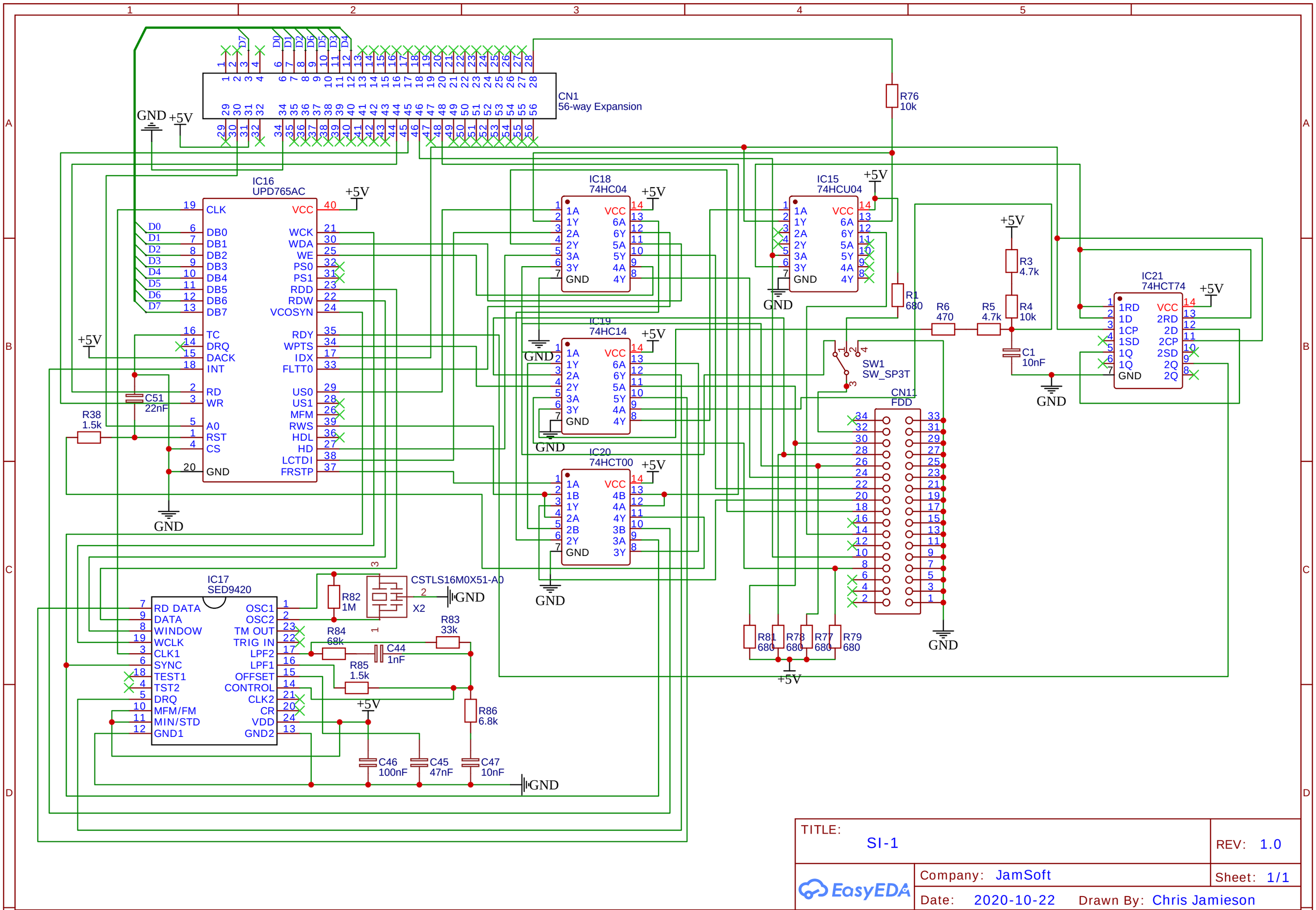

TITLE: SI-1	REV: 1.0
Company: JamSoft	Sheet: 1/1
Date: 2020-10-22	Drawn By: Chris Jamieson

EasyEDA