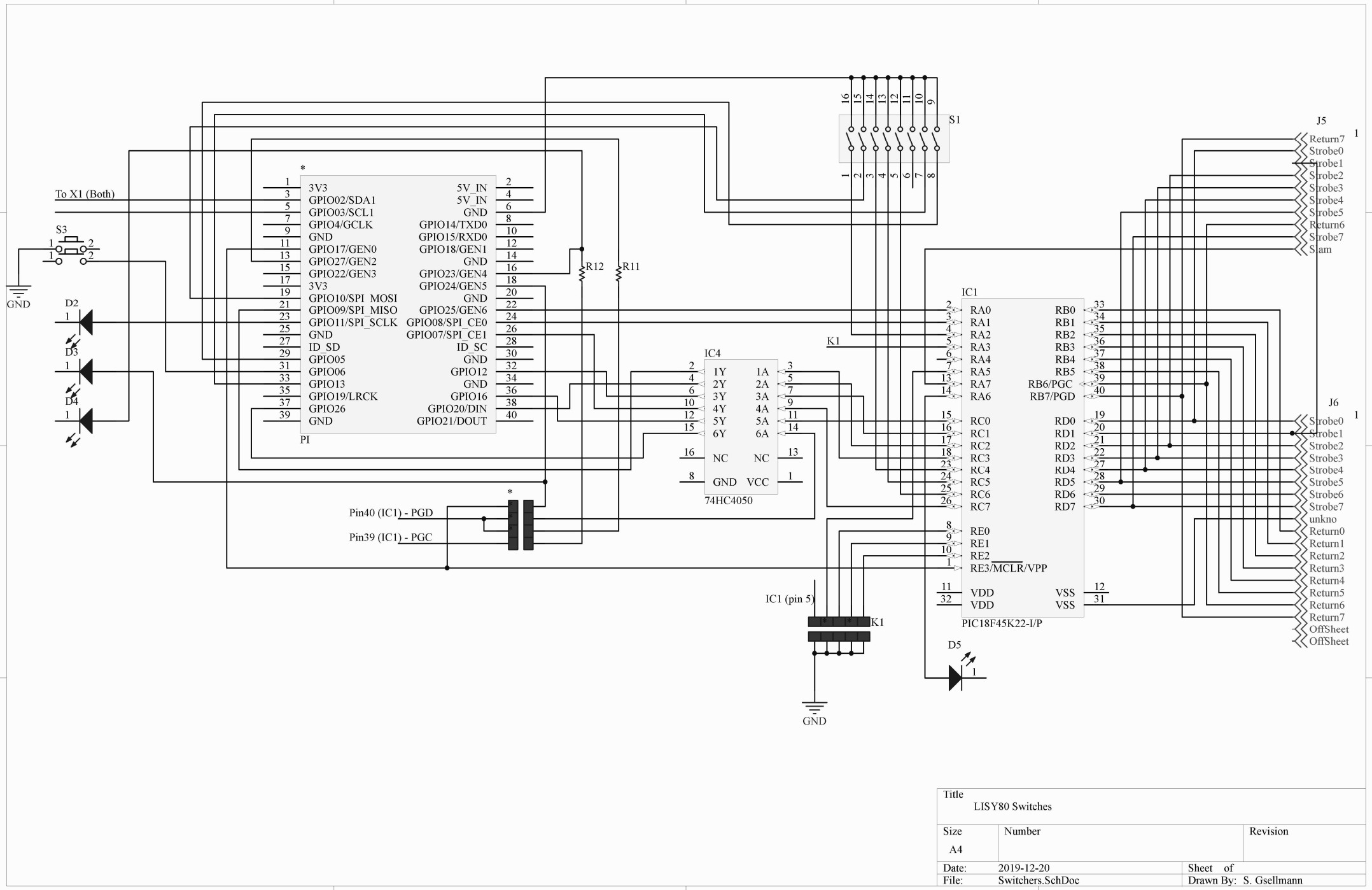

Title LISY80 Switches		
Size A4	Number	Revision
Date: 2019-12-20		Sheet of
File: Switchers.SchDoc		Drawn By: S. Gsellmann