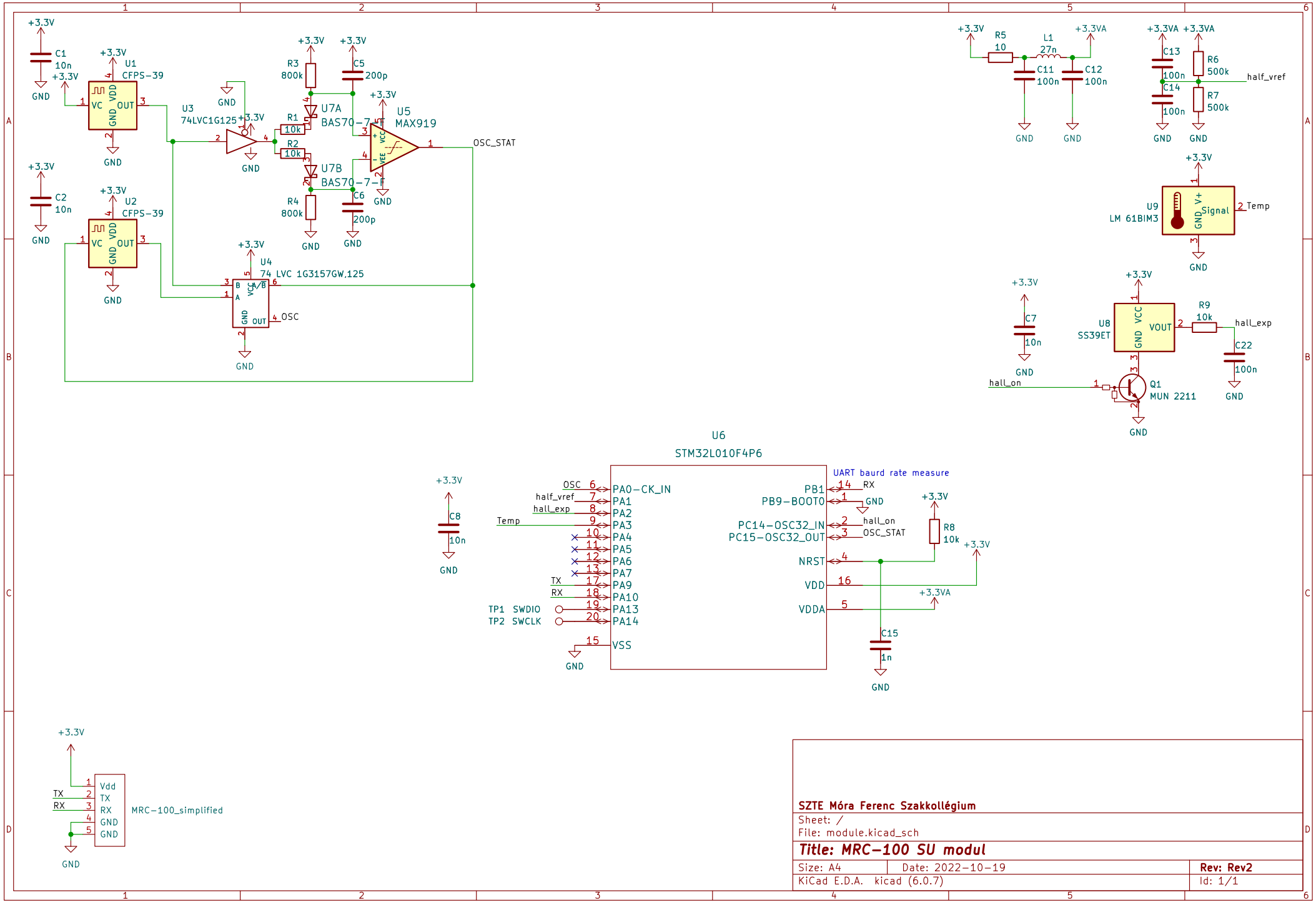
U1 CFPS-39
U2 CFPS-39
U3 74LVC1G125
U4 74 LVC 1G3157GW,125
U5 MAX919
U7A BAS70-7-F
U7B BAS70-7-F
OSC_STAT
OSC
U9 LM 61BIM3
Temp
U8 SS39ET
half_vref
half_exp
hall_on
Q1 MUN 2211
U6 STM32L010F4P6
UART baurd rate measure
PA0-CK_IN
PA1
PA2
PA3
PA4
PA5
PA6
PA7
PA9
PA10
PA13
PA14
VSS
PB1
PB9-BOOT0
PC14-OSC32_IN
PC15-OSC32_OUT
NRST
VDD
VDDA
TP1 SWDIO
TP2 SWCLK
MRC-100_simplified
SZTE Móra Ferenc Szakkollégium
Sheet: /
File: module.kicad_sch
Title: MRC-100 SU modul
Size: A4
Date: 2022-10-19
Rev: Rev2
KiCad E.D.A. kicad (6.0.7)
Id: 1/1