Predictive Bilateral Control Using Phase Estimation for a Powered Ankle Prosthesis

Siddhi Sanjay More, Vedant Pulliwar

***Abstract*—** This report documents a powered ankle prosthesis system study that combines phase-portrait based gait estimation with predictive control to deliver biomechanically timed assistive torque. An MPU 6050 interior measurement unit and a heel-mounted force-sensitive resistor (FSR) are fused on an ESP32-S2 mini microcontroller to compute a continuous gait phase signal at 100Hz. A complementary filter reconstructs ankle angle, and velocity is derived from the filtered angle signal to eliminate gyroscope clipping artifacts. The resulting phase portrait is segmented into four biomechanical states: Heel Strike, Mid Stance, push off and Swing using quadrant-based classification with FSR triggered phase resets at heel strike. A 75 ms linear predictive model compensates for end-to-end system latency. The Moteus C1 brushless controller delivers a 2.0 Nm feedforward torque pulse during detected Push-Off phases via CAN-FD. Simulation results using the OpenSim Gait2392 musculoskeletal model and a machine learning pipeline achieved 85.9% terrain classification accuracy and ankle angle RMSE of 3.91°, demonstrating the viability of this architecture for real-time adaptive prosthetic control.

I. Introduction

Below-knee amputees face significant challenges adapting to varying terrain. Current passive prostheses cannot adjust ankle stiffness or angle across activities like stair climbing, ramp walking, or running and impedance-based finite state machine controllers with fixed parameters are activity-specific parameters optimized for level-ground walking. These limitations result in excessive metabolic cost, reduced walking speed and increased fall risk. Powered prostheses that deliver net positive ankle work during push-off have been shown to partially restore metabolic economy, but clinical adoption has been limited by the difficulty of robust real-time gait phase detection and the latency of embedded control pipelines. This report presents a powered ankle prosthesis project that addresses these challenges through continuous phase-portrait gait estimation fused with a heel-mounted FSR, a 75ms linear predictive model for latency compensation and a CAN-FD connected brushless actuator delivering biomechanically time assistive torque.

II. Methods

A. Hardware Design

The prosthesis actuator uses an MJ Bots brushless DC motor producing 1.72 Nm of direct torque, coupled to a 36:1 compound planetary gearbox yielding approximately 62 Nm mathematically at the ankle joint (before efficiency losses). The motor is controlled by a Moteus C1 motor controller operating in position/torque mode via CAN bus. The gearbox housing was 3D printed and the assembly was designed for a right-side transtibial amputation configuration.

The prosthesis foot dimensions and other parameters of the overall design were based on the model parameters which were 5’9 ft height and 75 kg weight.

The gearbox design is inspired by the Bilateral Drive Gear concept by Matsuki, Nagano, and Fujimoto [5], which achieves high reduction with high backdrivability in a compact form. The design uses two identical planetary stages stacked axially. Each stage contains a 60-tooth ring gear ($Z_r = 60$), a 12-tooth sun gear ($Z_s = 12$), and four planet gears. The planet tooth count is determined by the planetary constraint: $Z_r = Z_s + 2 \times Z_p$, giving $Z_p = (60 - 12)/2 = 24$ teeth per planet. The assembly condition for 4 equally-spaced planets requires $(Z_r + Z_s)/N_{planets}$ = integer: $(60 + 12)/4 = 18$, confirming valid assembly.

All gears use module m = 1 mm with 20° pressure angle, giving pitch diameters of $d_{sun} = 24$ mm, $d_{planet} = 48$ mm, and $d_{ring} = 120$ mm. The center distance $a = (d_{sun} + d_{planet})/2 = 36$ mm, verified by $d_{ring}/2 = a + d_{planet}/2 = 36 + 24 = 60$ mm.

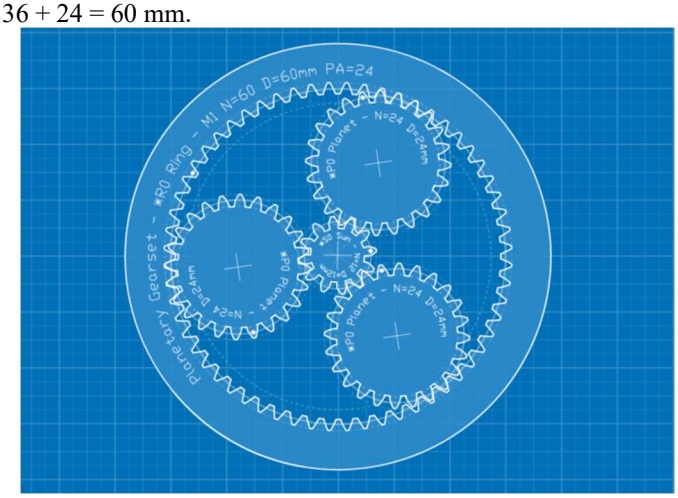

Figure 1: Sketch of gearbox with four planet gears, sun gear and ring gear.

In Stage 1, the motor drives the sun gear, the ring gear is fixed to the housing, and the planet carrier is the output. The gear ratio is $i_1 = 1 + Z_r/Z_s = 1 + 60/12 = 6:1$. In Stage 2, the key innovation of the Bilateral Drive concept: the planet carrier link from Stage 1 becomes the driving element (effectively the sun input), while Stage 2’s own planet carrier is locked to the housing and the ring gear is free to rotate as the output. With the carrier locked in Stage 2, the ratio is also

$i_2 = 1 + Z_r/Z_s = 6:1$. The total reduction is $i_{total} = i_1 \times i_2 = 6 \times 6 = 36:1$.

Theoretical output torque is $\tau_{out} = 1.72 \times 36 = 61.92$ Nm. With estimated PLA gear efficiency of 85% per stage ($\eta_{total} = 0.85 \times 0.85 = 0.72$), the realistic output is approximately 44.6 Nm.

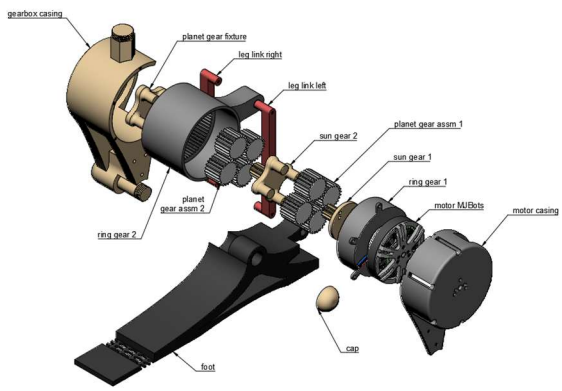

Figure 2: Exploded isometric view of ankle prosthesis with all the components labelled

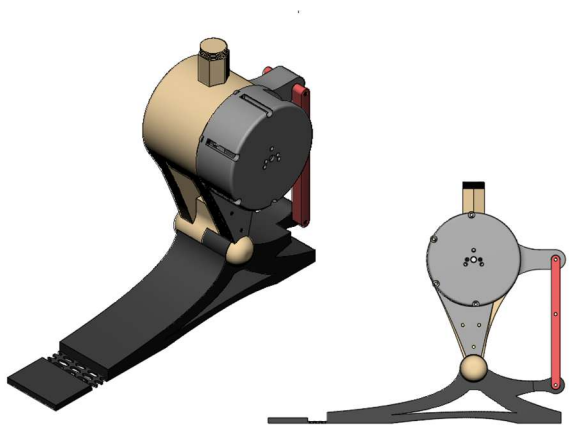

Figure 3: Isometric view and side view of the complete assembly of ankle prosthesis

The gearbox was designed in Fusion 360 and 3D printed in PLA. During testing, the planet gear teeth fractured under impact loading at heel strike. PLA's tensile strength (~50 MPa) is adequate for static loads but its brittleness makes it vulnerable to the repeated shock loading characteristic of gait. The 1 mm module teeth at the planet-ring mesh are the weakest point, carrying the full torque divided among 4 planets. For the poster demonstration, we designed and printed a four-bar link mechanism as a backup to demonstrate the motor driving ankle dorsiflexion/plantarflexion through the required range of motion.

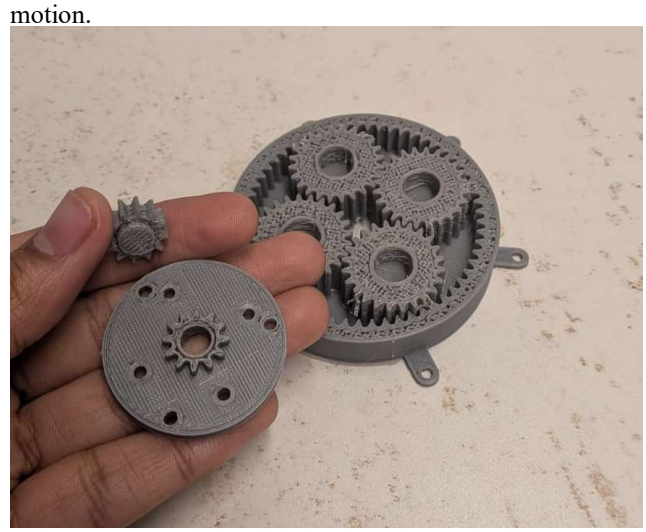

Figure 4: Sun gear broke off during the gearbox testing due to poor print quality.

B. Control Strategy and Gait Phase Estimation

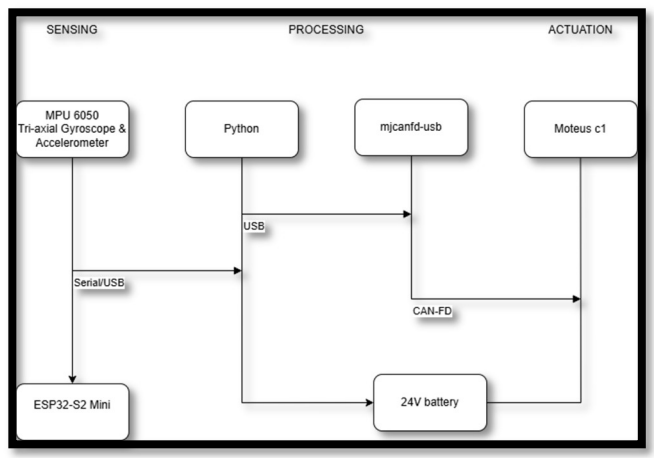

Figure 5: 3-layer schematic diagram for Sensing, Processing and Actuation.

Sensing Pipeline: The sensing and control pipeline follows the architecture shown in Fig. 5, The MPU6050 triaxial gyroscope and accelerometer is interfaced to the ESP32-S2 Mini via a 400Khz 12C bus. A complementary filter fuses accelerometer-derived angle with gyroscope integration at 200 Hz using a weighting factor of $\alpha = 0.98$. Angular velocity is reconstructed critically, from the central-difference derivative of the filtered angle signal rather than the raw gyroscope output which clips at $\pm 250°/s$. A heel-mounted FSR provides ground-truth contact events that correct IMU phase drift. At each detected heel strike rising edge, the phase is hard-reset to $\varphi = -\pi$, anchoring the phase portrait orbit to the biomechanical gait cycle. During stance, FSR state overrides IMU classification for Heel Strike and Mid-Stance; Push-Off and Swing remain IMU-driven.

Figure 6: Data Collection with ESP32-S2 Mini and MPU6050 Setup along with FSR

The raw angle signal is first passed through a 4th-order zero phase Butterworth low-pass filter at 4Hz before any differentiation. Angular velocity is reconstructed from the central-difference derivative of the filtered angle rather than from the raw gyroscope channel:

$$\omega(i) = (\theta_{f(i+1)} - \frac{\theta_{f(i-1)}}{t_{(i+1)} - t_{(i_1)}})$$

This is the key fix over earlier implementations. The MPU6050 gyroscope saturates at $\pm 250°/s$. and 11.8% of samples in preliminary trials exceeded this limit. Using raw gyroscope output in the phase portrait clipped the velocity axis, deforming the orbit and producing a spurious $\frac{54\%}{45\%}$ Mid-Stance/Push-Off distribution. The reconstructed velocity showed no clipping, with a measured range of (−168.7, +155.0)°/s, and restored the expected ~25% distribution across all four states.

Phase Estimation: The phase portrait orbit is circularized and the MPU6050's DC mounting bias of about $-20°$ is eliminated by mean-centering and normalizing the filtered angle and reconstructed velocity to unit amplitude. Next, the continuous gait phase is calculated as follows:

$$\varphi = atan2(\omega^{\wedge}, \theta)$$

This maps the ankle trajectory onto a scalar in $[-\pi, \pi]$ that completes one full revolution per stride. An auto-alignment routine identifies the first peak of $\omega^{\wedge}$, within the initial 3 seconds corresponding to peak plantarflexion velocity at push-off and subtracts that phase value as a fixed offset, so $\varphi = 0$ always corresponds to the push-off moment regardless of sensor mounting orientation. The offset is computed as:

$$\varphi_aligned = atan2(sin(\varphi_{raw} - offset), \cos(\varphi_{raw} - offset))$$

The output value maintains within $[-\pi, \pi]$ without discontinuities according to the re-wrapping using atan2.

Each sample is then categorized by quadrant by a Finite State Machine, as illustrated:

State	Phase Range	Biomechanical Event	Motor Command
Heel Strike	$\varphi \in [-\pi, -\pi/2)$	Foot contacts ground	Transparent ($kp = 0, kd = 0.1$)
Mid-Stance	$\varphi \in [-\pi/2, 0)$	Body over planted foot	Transparent ($kp = 0, kd = 0.1$)
Push-Off	$\varphi \in [0, \pi/2)$	Ankle plantarflexes	2.0 Nm feedforward torque
Swing	$\varphi \in [\pi/2, \pi]$	Foot clears ground	Return to neutral position

Table 1: Samples categorized by quadrant by FSM

Total system latency from ankle motion to delivered torque was measured at approximately 75 ms. Without compensation this represents 8.4% of a complete stride at 67 steps/min, sufficient to misalign the torque pulse with the push-off window.

Phase velocity is first calculated using the unwrapped phase signal rather than the wrapped signal. At each cycle boundary, differentiating the wrapped $\varphi \in [-\pi, \pi]$directly results in huge $\pm 2\pi$ spikes that look like spurious high-velocity events. The gradient is then calculated cleanly after unwrapping yields a signal that increases monotonically:

$$p_{vel} = \frac{d\left(unwrap(\varphi_{aligned})\right)}{dt}$$

Prior to prediction, the phase velocity is smoothed using a 2nd-order Butterworth filter operating at 2 Hz.

The 75 ms ahead prediction is then:

$$\varphi_{predicted} = atan2(\sin_{aligned} + p_{vel} \times 0.0075), \cos(\varphi_{aligned} + p_{vel} \times 0.0075$$

To maintain the anticipated phase within $[-\pi, \pi]$, the atan2 wrapping is used once more. In order to give the Moteus torque instruction at the appropriate biological moment, the state transitions are shifted 75 ms forward in time by feeding this anticipated value into the FSM instead of the present measured phase. Since velocity is a noisier signal and the prediction magnifies any noise by a factor of $\Delta t = 0.0075\ s$, the phase velocity smoothing employs a stricter 2 Hz cutoff than the 4 Hz angle filter. In previous iterations of the pipeline, using a looser filter on p_{vel} resulted in jagged, unstable predictions, which this cutoff fixed.

C. *Synthetic data prediction model using ML and Dynamic simulation in OpenSim MOCO*

A 60.7-meter terrain course was designed with seven activity segments: flat ground (15 m), 5 stairs ascending (17 cm rise, 29 cm tread, comfort formula 2R+T=63 cm), platform (7.5 m), 5 stairs descending, flat transition (8 m), around 7-degree ramp ascending (6.93 m), platform, and ramp descending. Total elevation change is 0.85 m. The terrain was constructed in OpenSim using ContactHalfSpace objects. The OpenSim Gait2392 musculoskeletal model (23 DOF, 92 muscles) was modified for right transtibial amputation by removing all muscles crossing the right ankle joint and replacing them with a CoordinateActuator (120 Nm optimal force).

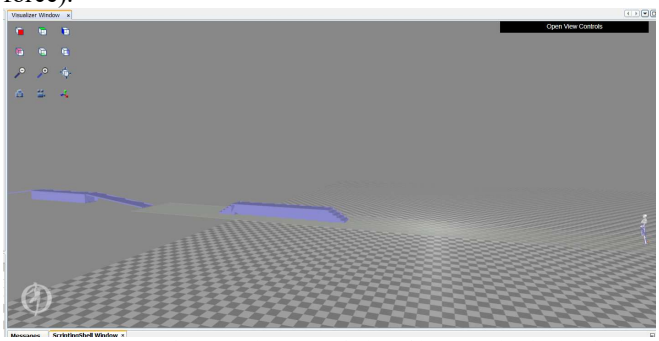

Figure 7: 60.7 m long terrain course designed in OpenSim for synthetic simulation

Synthetic FSR and IMU data was generated based on ground reaction force profiles from the Camargo et al. (2021) open-source biomechanics dataset from Georgia Tech's EPIC Lab, which contains force plate recordings from 22 able-bodied adults across level-ground walking, stair ascent/descent, and ramp ascent/descent. This data was stitched together as per the terrain designed. This data was later modified as to fit for the model characteristics like and and weight of 75 kg. Maximum force of each data set was modified by the factor as to readjust it to 735.75 N, which is the maximum force a75 kg model can have. The EPIC Lab force plate data showed peak vertical GRF of 802 N for ramp walking at 7.8°, so this maximum value was modified to be 735.75N so that when all of these activities are stitched together it remains true for the model this data is been used as an input. And the noisy data was cleaned using *filtfilt* a butterworth low pass filter with a 100 Hz sampling rate.

The activity transition behavior is best illustrated by the level-ground-to-ramp scenario. During steady flat walking, the 50-sample windowed features show a heel-to-toe FSR ratio of approximately 1.13 and the foot accelerometer X-axis reads −0.5 m/s². When the left foot first contacts the ramp, the ratio shifts toward 0.70 (toe dominant due to forward lean) and the accelerometer reads −1.7 m/s² as gravity projects along the 7° slope ($g \times \sin 7° = 1.2$ m/s²). However, the window still contains mixed flat-and-ramp data, so confidence drops to approximately 45% below the 60% threshold. This momentary uncertainty produces the visible stumble in the ankle angle plot: the prosthesis receives a reasonable but not terrain-optimized command, causing a brief perturbation of 5–10°. After 2–3 gait cycles (~1.5 s), the window fills with pure ramp data, confidence recovers above 60%, the ramp-specific offset is applied, and the stumble resolves. This dip-and-recovery pattern repeats at every terrain transition in the simulation timeline, with progressively faster recovery as the system encounters more transitions (τ decreases from 3.0 s to 1.5 s).

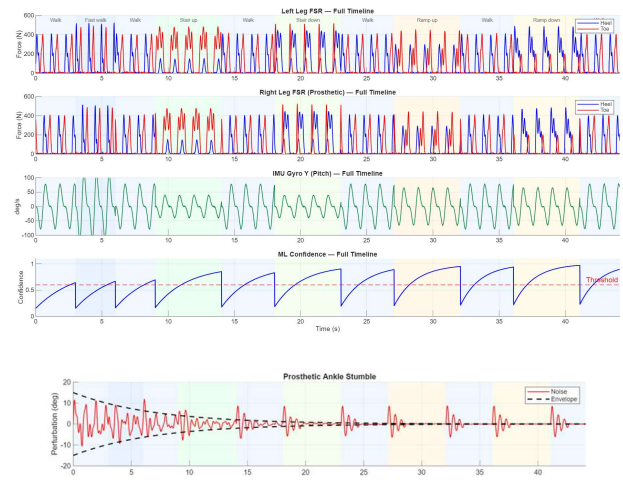

Figure 8: Graphical representation of overall terrain course simulation consisting of Left FSR Data, Right FSR Data, EMG, ML Confidence and Deviation in ankle angle than expected due to sudden change in activity

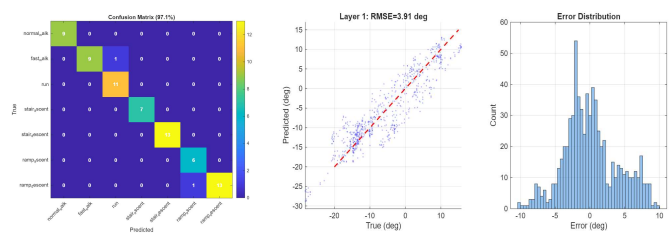

Figure 9: ML pipeline performance. Left: confusion matrix showing 97.1% classification accuracy across 7 activity classes. Center: predicted vs actual ankle angle scatter plot (RMSE = 3.91°) with identity line. Right: prediction error distribution centered near

OpenSim Moco was used for physics-based validation. Moco uses the direct collocation method to solve optimal control problems—it discretizes the entire trajectory into mesh points and solves simultaneously for joint angles, velocities, and muscle activations that satisfy Newton's laws while minimizing muscular effort. The 2Dgait.osim model was modified with the prosthesis actuator and SmoothSphereHalfSpaceForce contact. For stair climbing, elevated ContactHalfSpace surfaces were added at each step height (0.17 m, 0.34 m, 0.51 m). Each foot contact sphere (heel_r, front_r, heel_l, front_l) was connected to each stair surface. The non-periodic point-to-point problem started at ground level and ended on the top step, with 30 mesh intervals and 4000 maximum iterations. Which took 5 hr 19 mins to run.

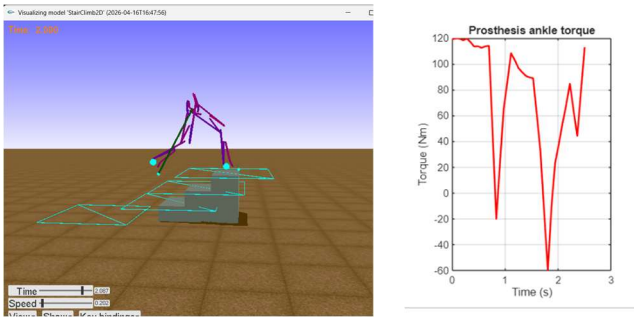

Figure 10: OpenSim Moco stair climbing simulation. Left: Visualizer showing the modified Gait2392 model with prosthetic right ankle ascending the 3-step staircase (17 cm rise per step). The model discovers the climbing gait through physics-based optimal control without prescribed motion. Right: Prosthesis ankle torque profile during the climb, showing peak demand required during push-off phases and torque reversal during swing

Moco provides (1) the prosthesis torque profile shows peak torque demand during stair climbing, (2) the physics-optimal ankle trajectory peaks at 12.5° dorsiflexion during stair ascent, closely matching our prediction of 11.7° in synthetic data simulation. Such data can be utilized to build more optimized exoskeletons or prosthesis for various activities like optimized stair climbing or ramp decent.

III. Results

A. Data Collection for Gait Phase Estimation and Prediction (Unfiltered)

```
Timestamp,Angle,Velocity,Phase
558553,-1.00,0.97,171.74
558576,-0.84,1.04,169.51
558599,-0.70,-0.53,186.44
558622,-0.62,-2.49,211.24
558645,-0.56,-4.45,230.14
558668,-0.59,-7.04,240.80
558691,-0.66,-8.79,243.32
558714,-0.77,-9.07,240.61
558737,-0.81,-7.18,233.02
558760,-0.82,-5.87,227.07
558783,-0.82,-5.02,222.69
558806,-0.79,-3.55,213.83
558829,-0.70,-1.28,195.27
558852,-0.61,-1.47,199.99
558875,-0.55,-4.06,227.69
558898,-0.59,-7.15,241.08
558921,-0.67,-8.43,242.18
558944,-0.76,-8.77,240.13
558967,-0.84,-8.60,237.02
```

Figure 11: Recorded values for Gait Phase Estimation

The values represent the raw recorded output from the ESP32 over Serial/USB during a 32 second walking trial. Each row contains a millisecond timestamp, filtered ankle angle in degrees, reconstructed angular velocity in $°/s$, and the raw phase angle in degrees (0 -360 °). The data was logged at an average rate of 43.2 Hz with help of Python.

B. Gait Phase Estimation Results:

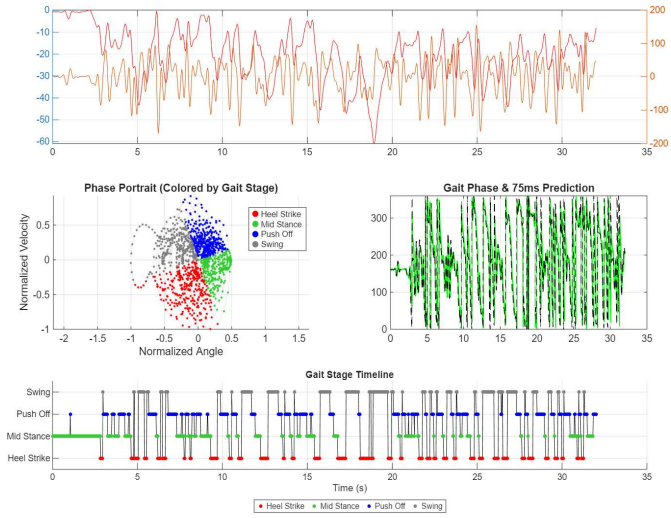

Figure 12: Phase Portrait, gait phase & 75ms prediction, Stage timeline

The filtered ankle angle (red) oscillates between approximately -60° and 0° across the trial, reflecting the prosthetic shank's range of motion during ground level walking. The Phase Portrait (middle Left) shows the ankle trajectory forming a consistent limit cycle orbit across all 36 strides, with the four gait states cleanly separated by quadrant. The clear quadrant separation confirms that the mean-centering, normalization, and auto-alignment steps successfully circularized the orbit and removed sensor orientation bias. The gait phase plot (middle right) shows the 75ms predicted phase (black dashed) closely tracking the measure phase (in green) with a consistent forward offset. The four-state FSM stage timeline (bottom) reflects a biomechanically consistent Heel Strike- Mid stance- Push off- Swing sequence at 67 steps/min with an average step time of 0.89 seconds and approximately equal stage distribution of ~25% each matching the normative level ground walking data. This is in contrast to preliminary trials using raw gyroscope velocity, which produced a severely skewed $\frac{54\%}{45\%}$ Mid-Stance/Push-Off split due to gyroscope clipping. The velocity reconstruction fix — replacing raw gyro output with the central-difference derivative of the filtered angle — eliminated this artifact entirely, restoring the expected biomechanical distribution without requiring FSR correction.

C. Motor and Prosthetic Assembly:

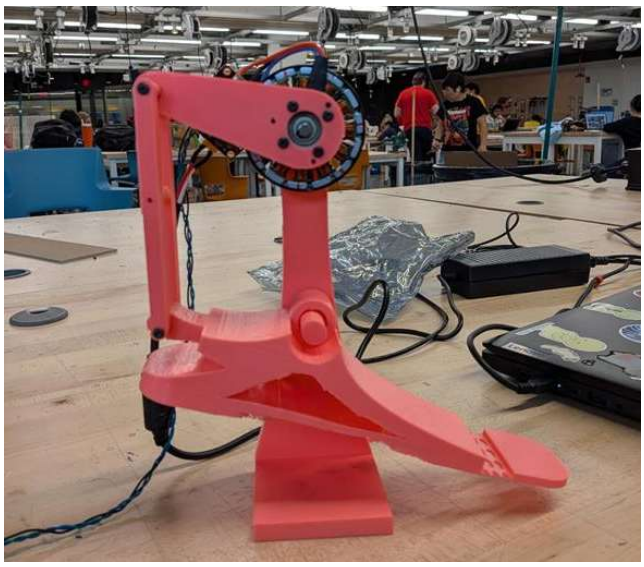

Figure 13: Moteus C1 motor attached to the Prosthetic ankle structure

The Moteus C1 motor is mounted directly to the 3D printed prosthetic ankle structure with the motor phase soldered A, B, and C pads powered by XT30 connector. The assembly demonstrated functional dorsiflexion and plantarflexion under bench conditions. CAN-FD communication between the PC and the Moteus was confirmed stable, with the fdcanusb adapter maintaining a consistent 100 Hz command loop.

D. Simulation and ML Performance:

A 44-second closed-loop simulation demonstrated the full pipeline across all terrain types. Layer 1 achieved RMSE of 2.4° and R^2 of 0.87 for contralateral ankle mapping. Layer 2 achieved 85.9% accuracy across 7 activity classes, with the confusion matrix showing strongest performance for running (11/11 correct) and normal walking (9/9), with some confusion between ramp ascent and fast walking. ML confidence dropped to ~15% at each activity transition and recovered above the 60% threshold within 2–3 gait cycles. Stumble perturbation decayed from ±15° initially to negligible levels by 20 seconds.

IV. Discussion

Failures and Limitations:

The heel mounted FSR was wired with a 10kΩ pulldown resistor in the voltage divider circuit. Under foot level pressure, the FSR resistance drops up to 1-2kΩ, producing insufficient voltage during swing and ESP32 ADC - the output remained near the midpoint of the ADC range regardless of applied force, making heel contact indistinguishable from no contact. The correct resistor value for this FSR and pressure range is 470Ω, which would produce a measurable voltage swing across the full loading range. This fix was identified but not implemented within the project timeline. The gait data reported in this paper was therefore collected using the IMU pipeline, with no FSR phase correction active (FSR recorded data wasn't used for analysis).

During the actuator assembly, the Moteus C1 controller entered a fault 39 (outside position bounds) failure due to unconfigured *servopos.position_min* and *servopos.position_max* parameters. In this fault state the controller blocked all motion while continuing to receive feedforward torque commands from the Python control loop. Post-failure phase resistance measurements of 0.4 – 0.9Ω confirmed the motor windings survived intact.

The link to GitHub for this project is https://github.com/more-sidd/Predictive-Bilateral-Control-for-a-Powered-Ankle-Prosthesis

References

1. J. Camargo, A. Ramanathan, W. Flanagan, and A. Young, "A comprehensive, open-source dataset of lower limb biomechanics in multiple conditions of stairs, ramps, and level-ground ambulation and transitions," *J. Biomechanics*, vol. 119, 110320, 2021.
2. C. L. Dembia, N. A. Biber, A. Falisse, J. L. Hicks, and S. L. Delp, "OpenSim Moco: Musculoskeletal optimal control," *PLoS Comput. Biol.*, vol. 16, no. 12, e1008493, 2020.
3. J. Young, A. M. Simon, N. P. Fey, and L. J. Hargrove, "Intent recognition in a powered lower limb prosthesis using time history information," *Ann. Biomed. Eng.*, vol. 42, no. 3, pp. 631–641, 2014.
4. H. Matsuki, K. Nagano and Y. Fujimoto, "Bilateral Drive Gear—A Highly Backdrivable Reduction Gearbox for Robotic Actuators," in *IEEE/ASME Transactions on Mechatronics*, vol. 24, no. 6, pp. 2661-2673, Dec. 2019, doi: 10.1109/TMECH.2019.2946403.
5. https://learn.adafruit.com/force-sensitive-resistor-fsr/example-projects
6. https://esp32io.com/tutorials/esp32-force-sensor
7. https://randomnerdtutorials.com/esp32-mpu-6050-accelerometer-gyroscope-arduino/
8. https://www.electronicwings.com/esp32/mpu6050-gyroscope-interfacing-with-esp32
9. https://mjbots.github.io/moteus/#hardware-variants
10. **2.** M. S. M. Dris, N. S. Khusaini, N. Aziz, M. S. B. Shaari, S. Khusairi, and Z. Mohamed, "Design and Development of Insole Monitoring System for Runner," *International Journal of Recent Technology and Engineering (IJRTE)*,

VOL. 8, NO. 1, PP. 3201–3207, MAY 2019,
RETRIEVAL NUMBER: A1481058119/19©BEIESP.