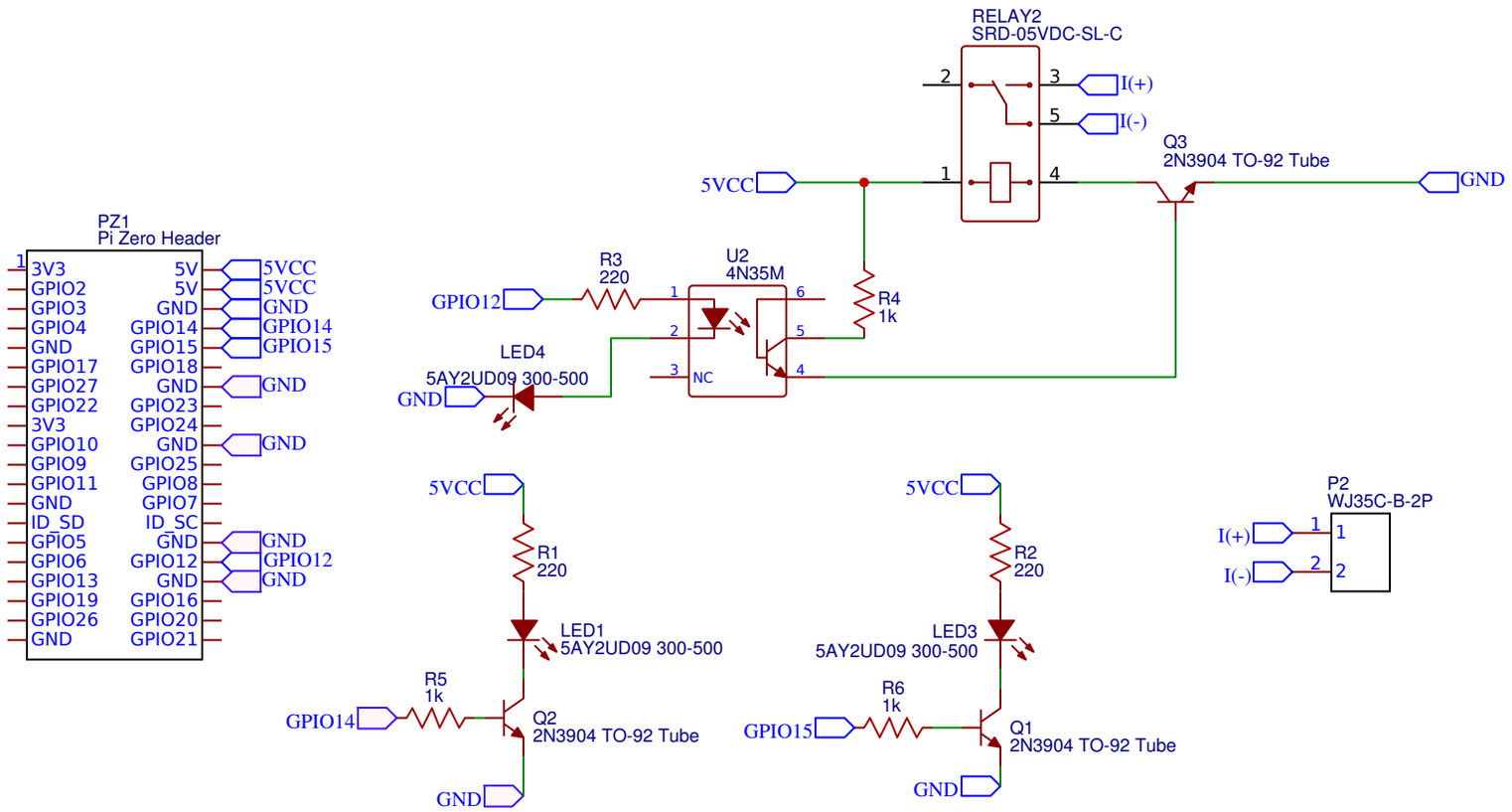

TITLE: RPi Zero Daughter Board	REV: 2.0
Date: 2018-06-21	Sheet: 1/1
EasyEDA V5.5.14	Drawn By: morganjlw1