## 7.4 Developer Board Schematic, LPR2430A & LPR2430ERA Version

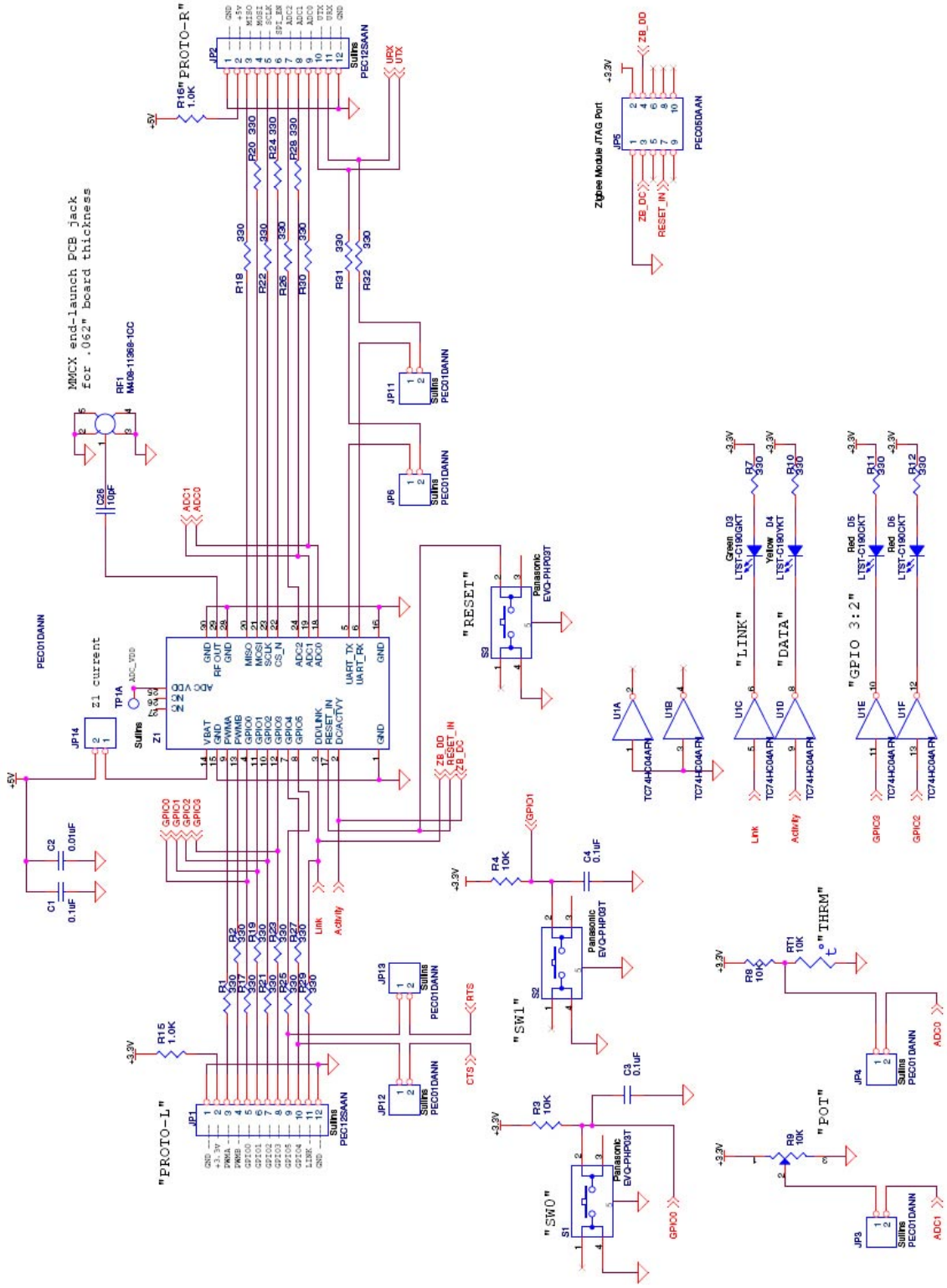

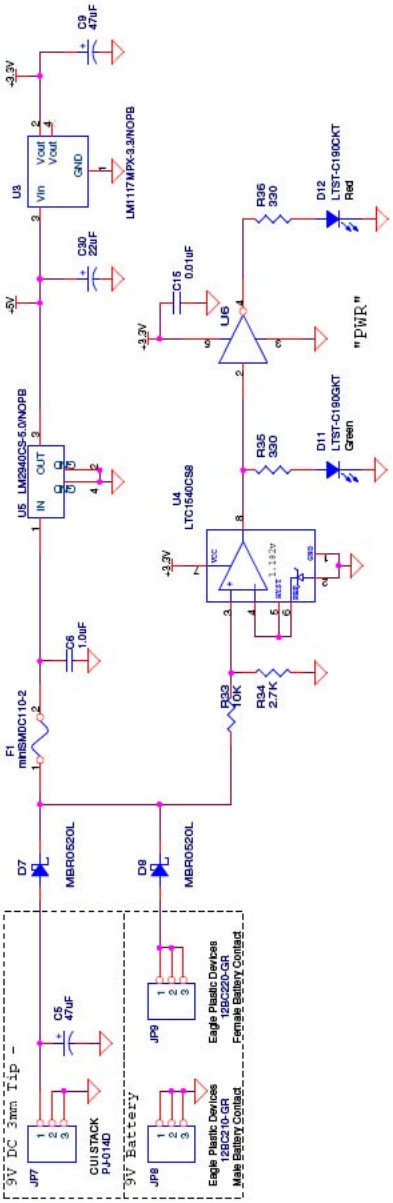
C9
47uF
+3.3V
U3
Vin
Vout
Vout
GND
LM1117MPX-3.3/NOPB
C30
22uF
+5V
U5_LM2940CS-5.0/NOPB
IN
OUT
C6
1.0uF
F1
miniSMDC110-2
D7
MBR0520L
D9
MBR0520L
C5
47uF
3V DC Jack Tip -
JP7
CUI STACK
PJ-014D
3V Battery
JP8
Eagle Plastic Devices
128C220-GR
Male Battery Contact
JP9
Eagle Plastic Devices
128C210-GR
Female Battery Contact
R33
10K
R34
2.7K
U4
LTC1540CS8
C16
0.01uF
U6
R36
330
D12
LTST-C190CKT
Red
R35
330
D11
LTST-C190GKT
Green
"PWR"

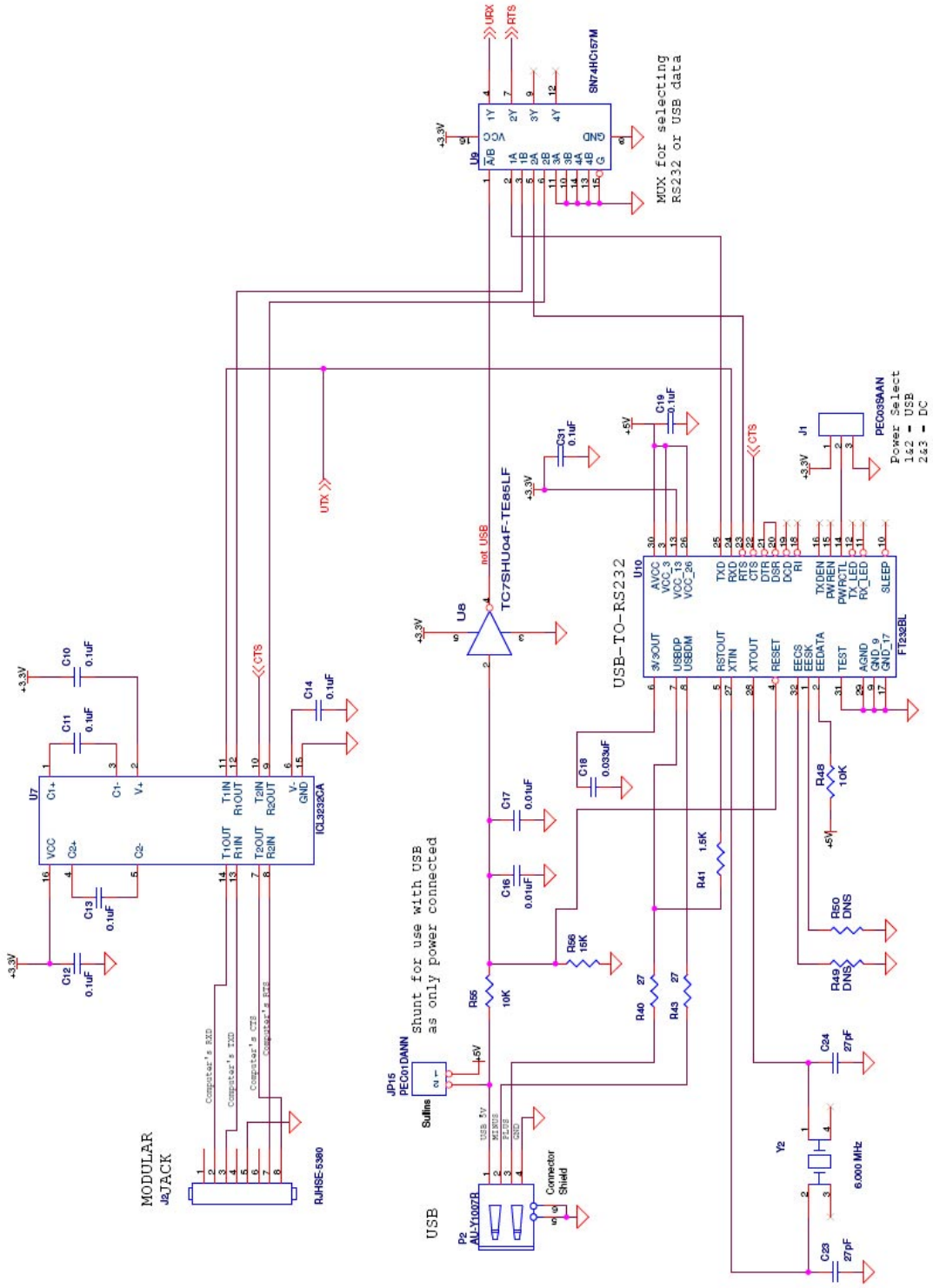
MODULAR
J2JACK
RJHSE-5380
ICL3232CA
U7
TC7SHU04F-TE85LF
U8
not USB
USB-TO-RS232
U10
FT232BL
SN74HC157M
U9
MUX for selecting
RS232 or USB data
Shunt for use with USB
as only power connected
JP15
PEC01DANN
Sullins
USB
P2
AU-Y1007R
Connector
Shield
Y2
6.000 MHz
J1
PEC03SAAN
Power Select
1&2 - USB
2&3 - DC
Computer's RXD
Computer's TXD
Computer's CTS
Computer's RTS
UTX
URX
RTS
CTS
+3.3V
+5V

## 7.5 Developer Board Schematic, LPR2430 & LPR2430ER Version

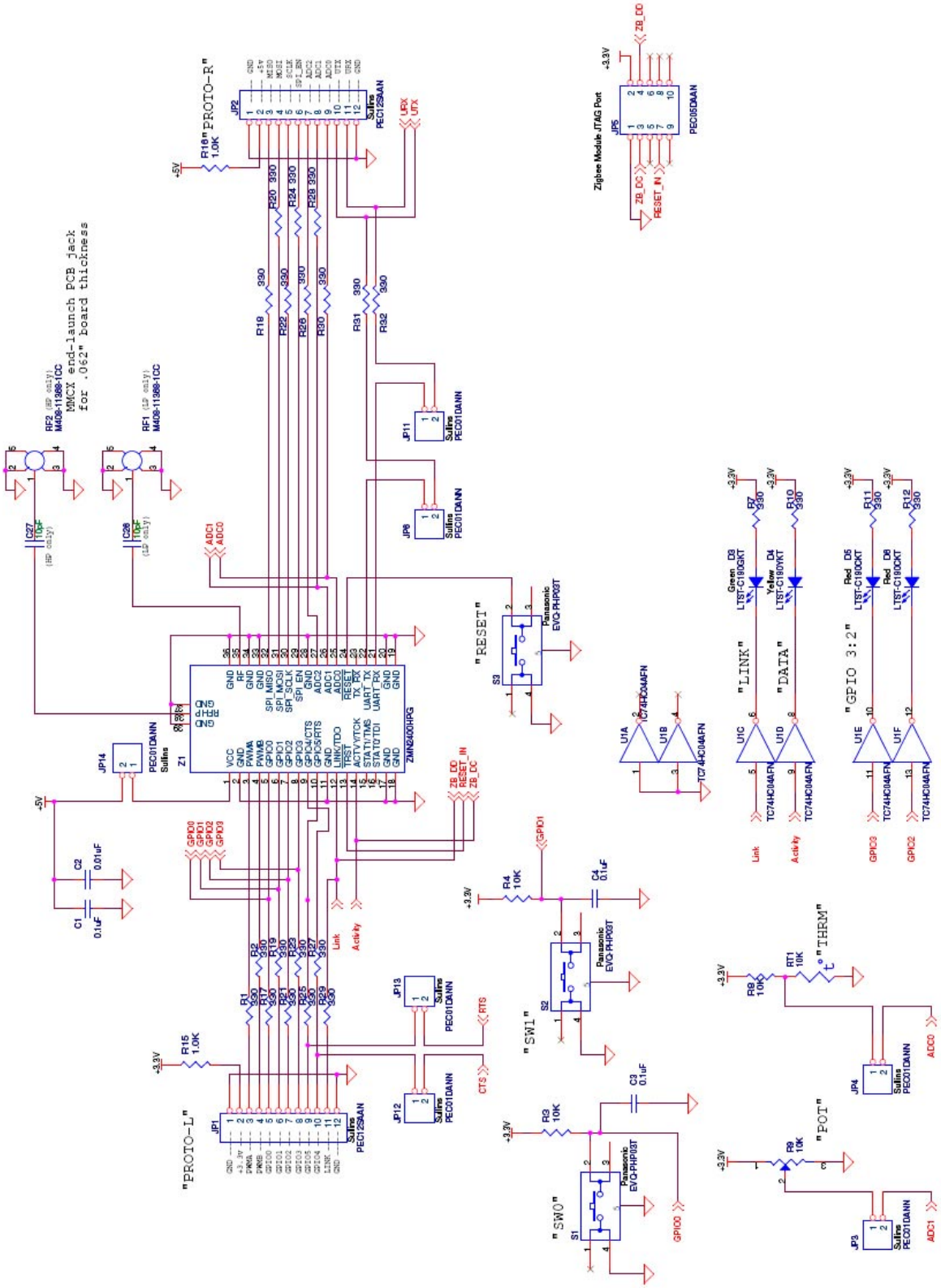

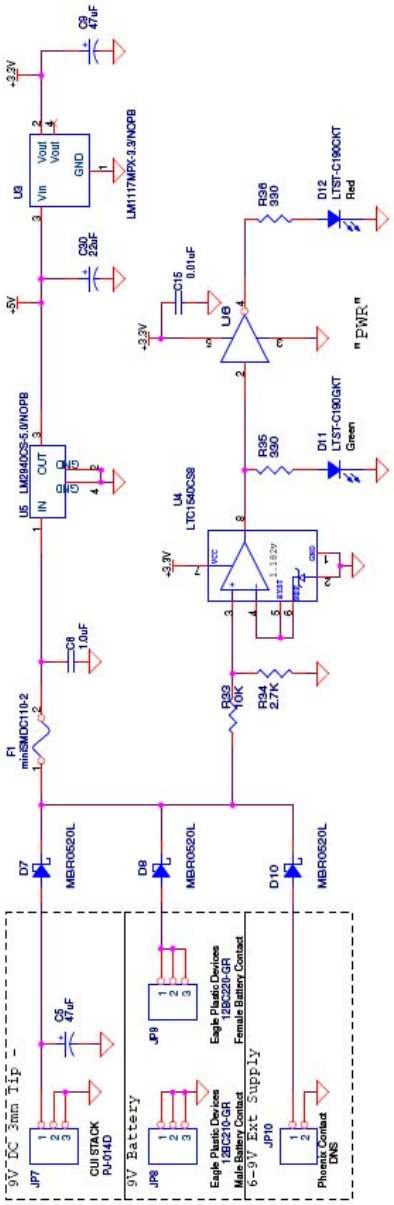
9V DC 3mm Tip
JP7
CUI STACK
RJ-014D
C5
47uF
9V Battery
JP8
Eagle Plastic Devices
12BC210-GR
Male Battery Contact
JP9
Eagle Plastic Devices
12BC220-GR
Female Battery Contact
6-9V Ext Supply
JP10
Phoenix Contact
DNS
D7
MBR0520L
D8
MBR0520L
D10
MBR0520L
F1
miniSMDC110-2
C6
1.0uF
U5
LM2940CS-5.0/NOPB
IN
OUT
U3
LM1117MPX-3.3/NOPB
Vin
Vout
GND
C30
22uF
+5V
C9
47uF
+3.3V
U4
LTC1540CS8
R33
10K
R34
2.7K
U6
C15
0.01uF
R35
330
D11
LTST-C190GKT
Green
R36
330
D12
LTST-C190CKT
Red
"PWR"

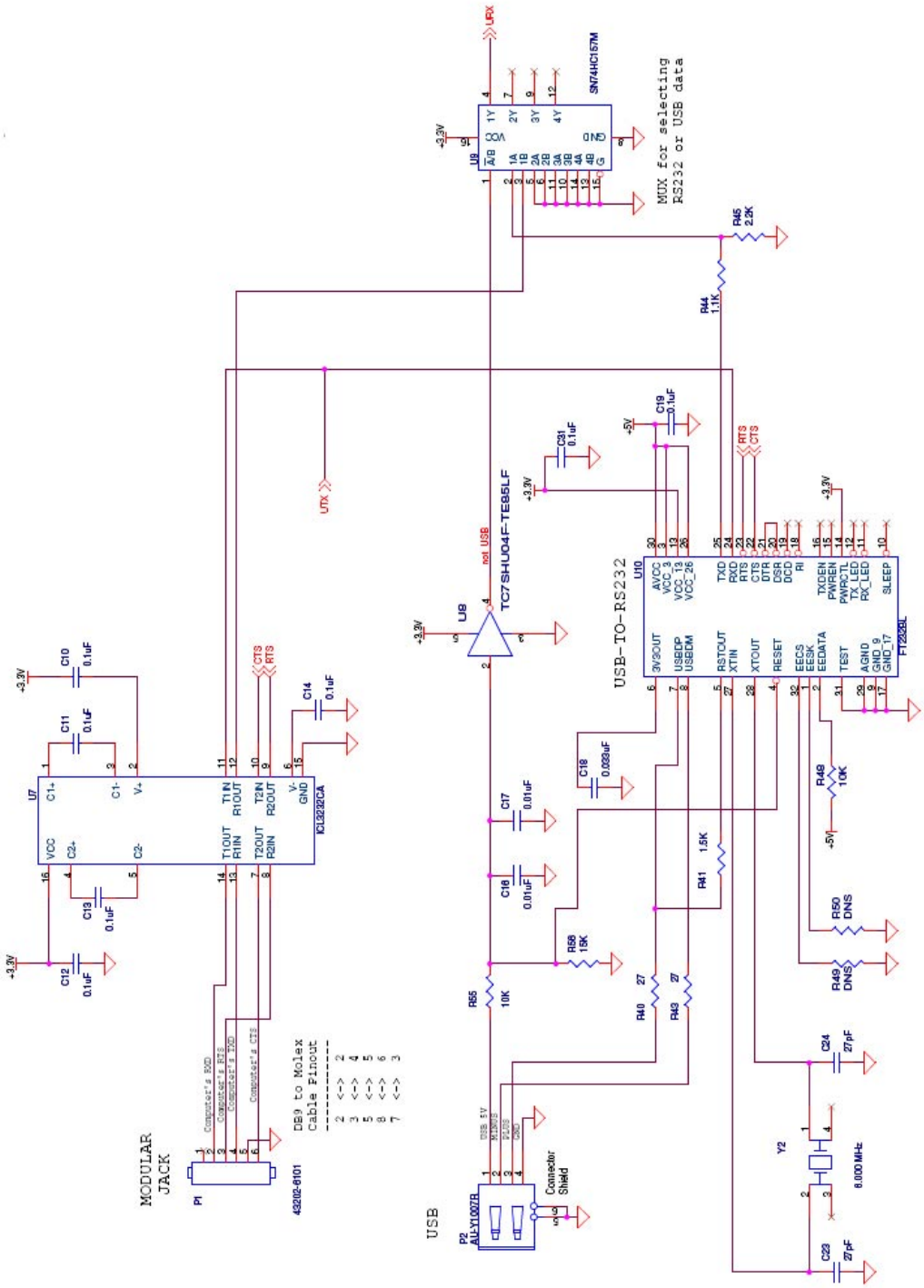
MODULAR JACK
P1
43202-6101
DB9 to Molex Cable Pinout
USB
P2
AU-Y1007R
Connector Shield
USB-TO-RS232
U10
FT232BL
U8
TC7SHU04F-TE85LF
not USB
U7
ICL3232CA
U9
SN74HC157M
MUX for selecting RS232 or USB data
Y2
6.000 MHz
UTX
URX
RTS
CTS