POWER + PROGRAMMING INTERFACE

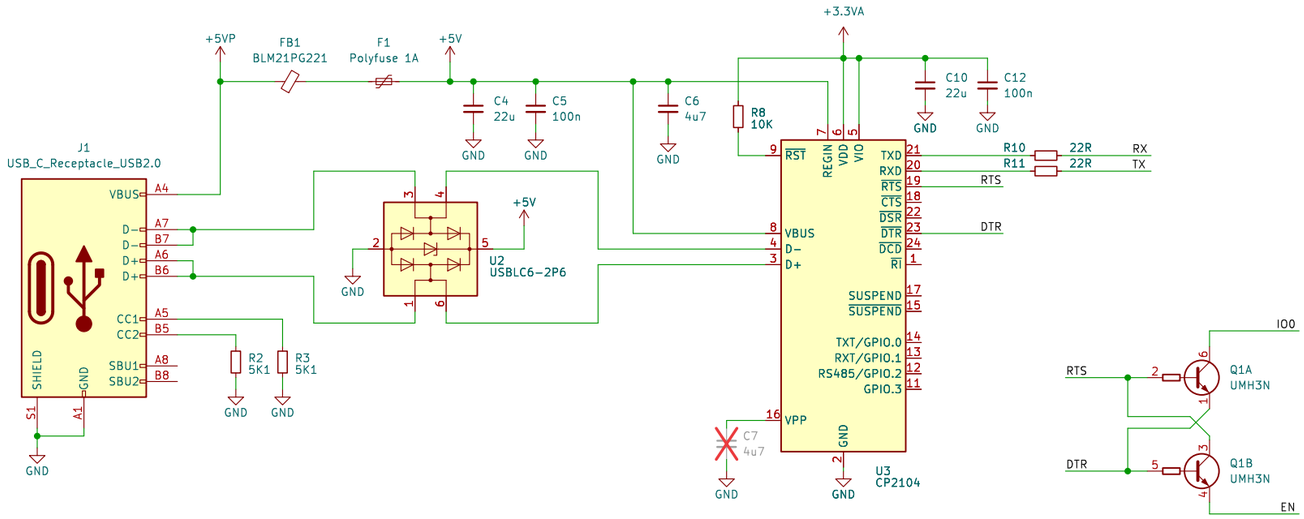

I2C SENSOR + QWIIC CONNECTOR

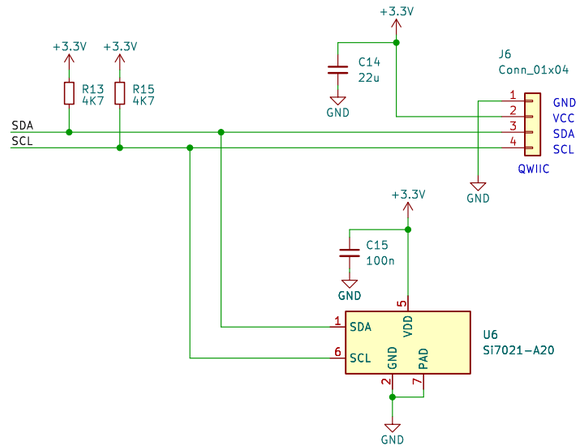

RELAY

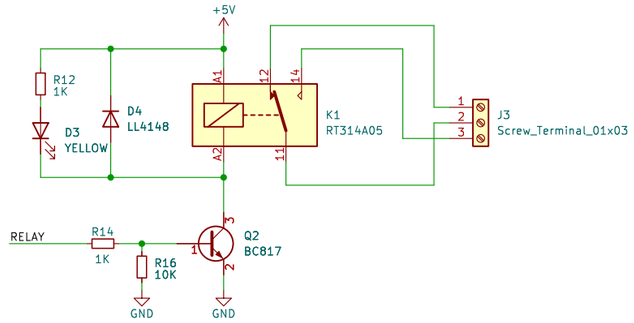

LDO 5V TO 3.3V

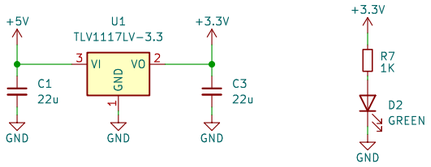

MCU

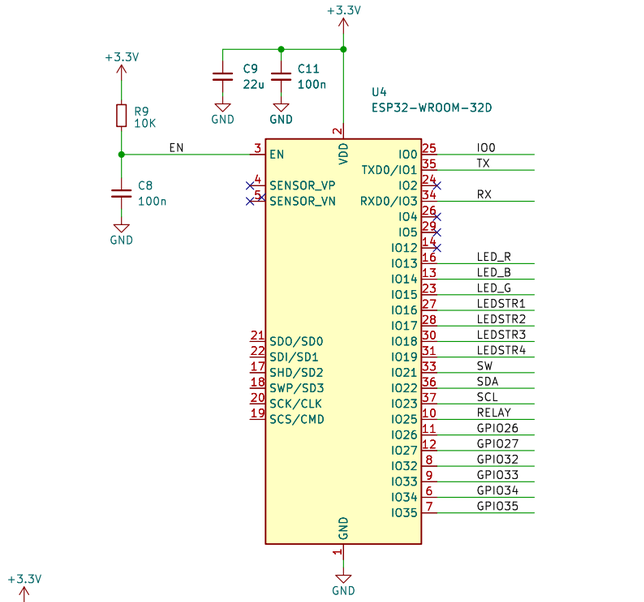

USER I/O

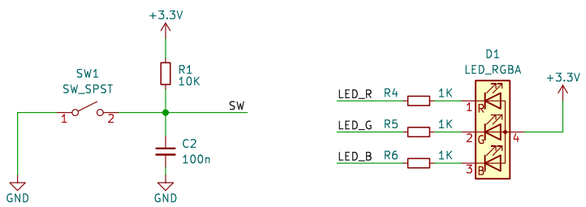

LED DRIVER

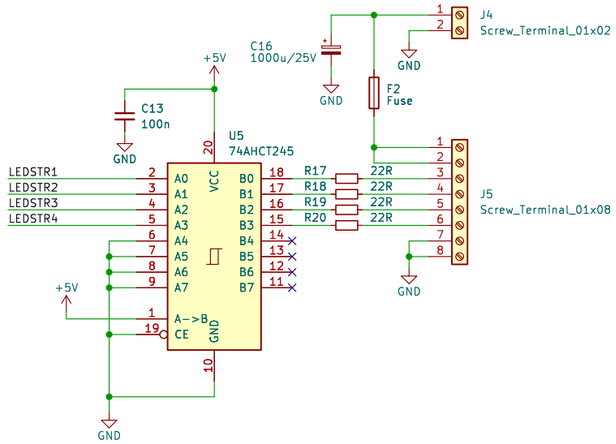

USER I/O

MOUNTING

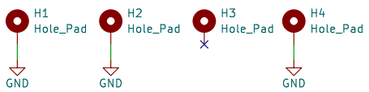

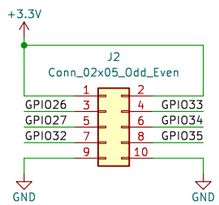

Use boot control pins with caution: 0,2,5,12,15

IO0: Avoid device connections.
IO2: Avoid external pullups — will cause bootloader fail.
IO5: Has builtin pullup at POR.
IO12: Avoid external pullups — will cause bootloader fail.
IO15: Has builtin pullup at POR.

ADC2 is not available when using WiFi

made by morten

Sheet: /
File: iot-thing.kicad_sch

Title: iot-thing board

Size: A3	Date: 2023-10-14	Rev: 1.0
KiCad E.D.A. kicad 7.0.6		Id: 1/1