HumaClot Junior (model HC1) | LIS Interface Manual

Version 3

Revision list

Revision	Date	Description	Editor
1	2017/12/07	First revision	Mathias Kamprath
2	2022/04/28	USB A-B cable and software example was added to chapter Introduction	Tony Petzold
3	2025/05/07	Disclaimer added	Tony Petzold

Human
Diagnostics Worldwide

Disclaimer:

While HUMAN provides detailed documentation describing the Laboratory Information System (LIS) interface of HumaClot Junior (model HC1), it is the sole responsibility of the laboratory to ensure the correct configuration of their LIS in accordance with the provided protocol. HUMAN does not assume any responsibility for the setup, modification, or validation of the LIS system used by the laboratory.

Contents

1. Distinguish old against new HumaClot Junior (model HC1) 3
2. Introduction 3
3. Connection to host system 4
4. Connection to host system with barcode reader 4
5. Connection to host system with barcode reader and printer 5
6. Preparation 6
7. LIS output format 7

1. Distinguish old against new HumaClot Junior (model HC1)

The serial number of the **old** HumaClot Junior is as following:

HC-9999

HC- is fixed.
9999 can be any number.

The serial number of the **new** HumaClot Junior (model HC1) is as following:

A9999999

A can be any uppercase character.
9999999 can be any number.

2. Introduction

The HumaClot Junior supports a unidirectional LIS interface. In case a LIS communication is needed, the result data can be sent out by the USB interface to a computer.

A USB A-B cable is needed, it can be ordered also at HUMAN see REF 15660/54.

A suitable LIS software on the computer is needed, which supports serial connections via USB. For example, the software HTerm can be used to test the connection between instrument and computer.

3. Connection to host system

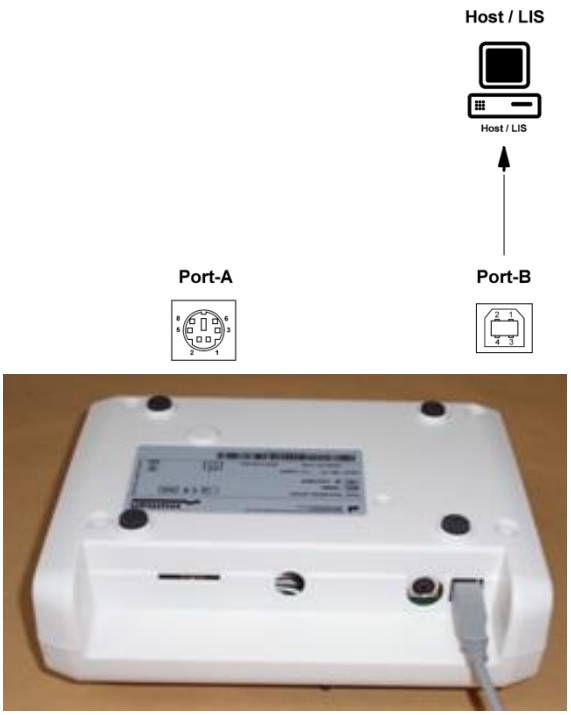

The analyzer is connected to LIS/host system.
Patient ID needs to be edited manually.

Setup:
Port A: Off
Port B: Host

Connect the analyzer with a computer system by using the USB interface and a USB A-B cable (for example REF 15660/54).

4. Connection to host system with barcode reader

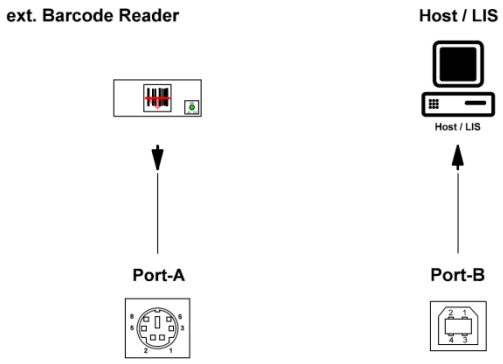

The analyzer is connected to LIS/host system.
A connected external barcode reader allows to read the patient ID by barcode.

Setup:
Port A: Off
Port B: Host

5. Connection to host system with barcode reader and printer

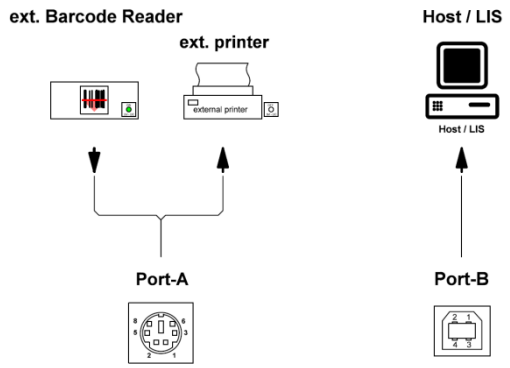

The analyzer is connected to LIS/host system.
A connected external barcode reader allows to read the patient ID by barcode.
A connected external printer allows to print results.

Setup:
Port A: Ext. printer
Port B: Host

6. Preparation

Enable the data output at the analyzer at first.
Switch ON the analyzer.

```
STANDBY      37.4°C
< 1         PT      >
```

Wait until start-up procedure has finished.

```
STANDBY     37.4°C
<    UTILITIES     >
```

Select **UTILITIES** and press the **Mode** key.

```
PIN code:
>xxxxx<
```

Key in the PIN code. The factory default is **11111**.

```
UTILITIES   select:
<     Printer      >
```

```
UTILITIES   select:
<      Port B      >
```

Select **Port B** and press the **Enter** key.

```
Port B
<        Off       >
```

```
Port B
<       HOST       >
```

Select **HOST** and press the **Enter** key.

```
Select: ESC= work
ENTER=  more param.
```

Press the **Esc** key.

```
Checking parameters
please wait
```

```
Save new parameters?
ESC= no, ENTER= yes
```

Press the **Enter** key for saving the new parameter setup.

```
Processing -
please wait
```

```
STANDBY      37.4°C
< 1         PT      >
```

The analyzer will send out the data in semicolon separated fields in ASCII format after the measurement result appeared once a time.
The LIS system has to pick up this data by interrupt or polling.

7. LIS output format

```
<STX>Analyzer; S/N; Date; Time; Patient ID; Method_Name; Channel No; Raw Value1;
R_Unit1; Raw Value2; R_Unit2; 1st Conversion; 1_Unit; 2nd Conversion; 2_Unit; 3rd
Conversion; 3_Unit; Flags; CRC;<CR><LF>
```

Example:

```
<STX>HumaClot Junior; M1360008; 16.10.2017; 19:40:20; 123456789; PT; 1; 14,6; s;
void; void; 71,4; %; 1,25; INR; void; void; OK; 9792;<CR><LF>
```

Format / Parameter	Example	Explanation
<STX>	<STX>	Start of transmission
Analyzer;	**HumaClot Junior;**	Analyzer type
S/N;	**M1360008;**	Serial number
Date;	**16.10.2017;**	Date stamp
Time;	**19:40:20;**	Time stamp
Patient ID;	**123456789;**	Patient ID
Method_Name;	**PT;**	Test application
Channel No;	**1;**	Measuring channel number
Raw Value1;	**14,6;**	Clotting time
R_Unit1;	**s**	Unit
Raw Value2;	**void;**	Not used → void
R_Unit2;	**void;**	Not used → void
1st Conversion;	**71,4;**	Converted value 1st conversion
1_Unit;	**%;**	Unit
2nd Conversion;	**1,25;**	Converted value 2nd conversion
2_Unit;	**INR;**	Unit
3rd Conversion;	**void;**	Not used → void
3_Unit;	**void;**	Not used → void
Flags;	**OK;**	No error flags
CRC;	9792	Checksum **1)
<CR><LF>	<CR><LF>	End of transmission

**1) The calculation of CRC starts at first character of <STX> until last space-character before CRC.
(All bold marked example fields in the table above.)