Chittagong University of Engineering & Technology

Dept. of Electronics & Telecommunication Engineering

Project Name

EnerGaze: Smart Energy Monitoring & Fault-Aware Load Control Using IoT

Course Code	: ETE 416
Course Title	: IoT and Industrial Automation Sessional
Date of Submission	: 05.04.2026
Level	: 04
Term	: II

Submitted By

TAMIM AHMED (2008015)
S. M. UTSHAB (2008031)
ASADUL AKTHER (2008043)

Submitted To

Taieba Taher
Assistance Professor,
Dept. of ETE, CUET

Abstract

This project presents the design and implementation of **EnerGaze**, an advanced ESP32-based IoT energy monitoring and automation system. While traditional meters offer only passive billing, EnerGaze integrates real-time electrical sensing (Voltage, Current, Power, Energy) with environmental and safety monitoring using DHT22, Ultrasonic sensors. Data is processed at the edge to provide local OLED feedback, logged into SPIFFS in CSV format, and synchronized with a Blynk mobile app and a custom live web dashboard with secure login protection. A key feature of the system is the use of rolling linear regression analysis for future energy consumption prediction. Experimental results demonstrated a strong negative correlation between ambient temperature and power usage, enabling proactive load shedding and smart automation. This solution provides a scalable, cost-effective framework for home energy management and safety.

Index Terms— ESP32, IoT, Energy Monitoring, Fault-Awareness, ACS712, Blynk Cloud.

Introduction

Background of the Study

With the rapid increase in electrical appliances, energy management and safety have become critical issues in modern households and industries. Standard circuit breakers react only after a severe fault has occurred. Furthermore, consumers lack real-time visibility into their power consumption, leading to energy waste and high electricity bills. The integration of the Internet of Things and Edge Computing provides a pathway to upgrade these passive electrical nodes into smart, decision-making devices.

Problem Statement Lack of Predictive Safety

- **Current Issue:** Electricity usage in campus labs and dorms is often inefficient due to a lack of real-time user feedback.
- **Safety Risk:** Faults like overloads, overheating, or abnormal current draws are often detected too late, leading to damage or waste.
- **The Gap:** Standard meters provide data only at the end of the month, offering no immediate insight for correction.

Objectives

- To develop a real-time monitoring system for Voltage, Current, Power, Energy, and Power Factor using ZMPT101B and ACS712 sensors.
- To implement a multi-layered automation system based on environmental conditions (DHT22) and physical presence (Ultrasonic).
- To ensure safety through individual overcurrent protection for each load.
- To provide a multi-platform monitoring experience through an OLED display, Blynk IoT app, and a secure web dashboard.
- To integrate predictive algorithm for energy consumption prediction using linear extrapolation.

Hardware Components

- **ESP32 Microcontroller:** Chosen for its dual-core processing power and integrated Wi-Fi/Bluetooth stacks, allowing simultaneous sensor reading and cloud data transmission.
- **ZMPT101B Voltage Sensor:** An active transformer-based module used to measure AC voltage up to 250V safely by providing galvanic isolation.
- **ACS712 (30A) Current Sensors (x2):** Two Hall-effect based sensors are used to monitor two independent loads (e.g., a Light and a Heater). These provide the raw data needed for individual load analysis.
- **DHT11/22 Temperature & Humidity Sensor:** Integrated to monitor ambient conditions, providing the input feature for the ML correlation analysis.
- **2-Channel Relay Module:** Acts as the physical "Switch" for the Load Shedding mechanism, controlled by the ESP32's digital pins.
- **0.96" I2C OLED Display:** Provides a local Human-Machine Interface (HMI) to show real-time V-I-P data without needing a smartphone.

Methodology

EnerGaze is an ESP32-based IoT smart energy monitoring and automation system. It measures electrical parameters by reading voltage and current sensors, then calculates RMS voltage/current, power, and total energy consumption (kWh) over time. A DHT22 sensor provides temperature and humidity readings, while additional sensors such as ultrasonic water pump automation and safety logic. The ESP32 controls multiple appliance loads using relays, which can be switched manually from a web dashboard or Blynk mobile app, automatically using sensor thresholds, or according to user-defined schedules stored in SPIFFS. Built-in overcurrent protection turns off a load if abnormal current is detected to prevent damage. The system displays key values locally on an OLED and also streams

data to Serial in CSV format for Excel logging. The web dashboard provides live updates through a JSON API, supports CSV download, and uses a login system to secure remote access. It also estimates future consumption using lightweight regression.

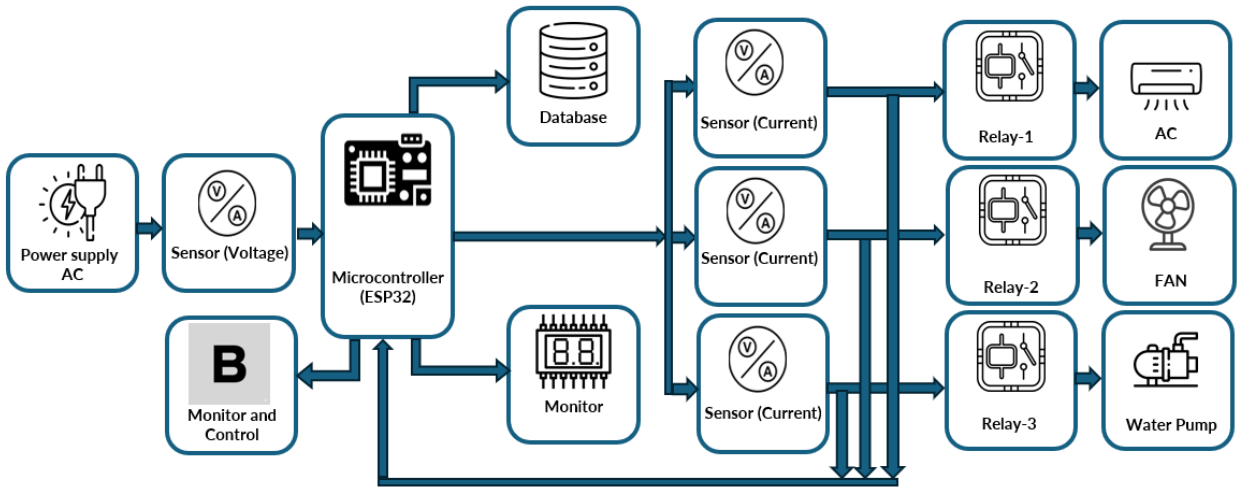

Figure 1: Workflow of the system

Circuit Operation

In the **EnerGaze** system, the ESP32 microcontroller serves as the central processing hub, continuously sampling analog signals from the **ZMPT101B** and **ACS712** sensors to calculate real-time **RMS** voltage, current, and power, while concurrently reading digital data from the **DHT22** and ultrasonic sensors. Based on this real-time telemetry, user-defined **SPIFFS** schedules, or manual commands received from the secure web dashboard and **Blynk** app, the **ESP32** controls AC appliances via a multi-channel relay module. To ensure hardware safety, it actively monitors current draws and instantly cuts power to specific relays if an overcurrent is detected. Finally, all processed data is seamlessly routed to a local **I2C OLED** display, logged in CSV format for future analysis, and transmitted over Wi-Fi for remote monitoring and predictive regression analysis.

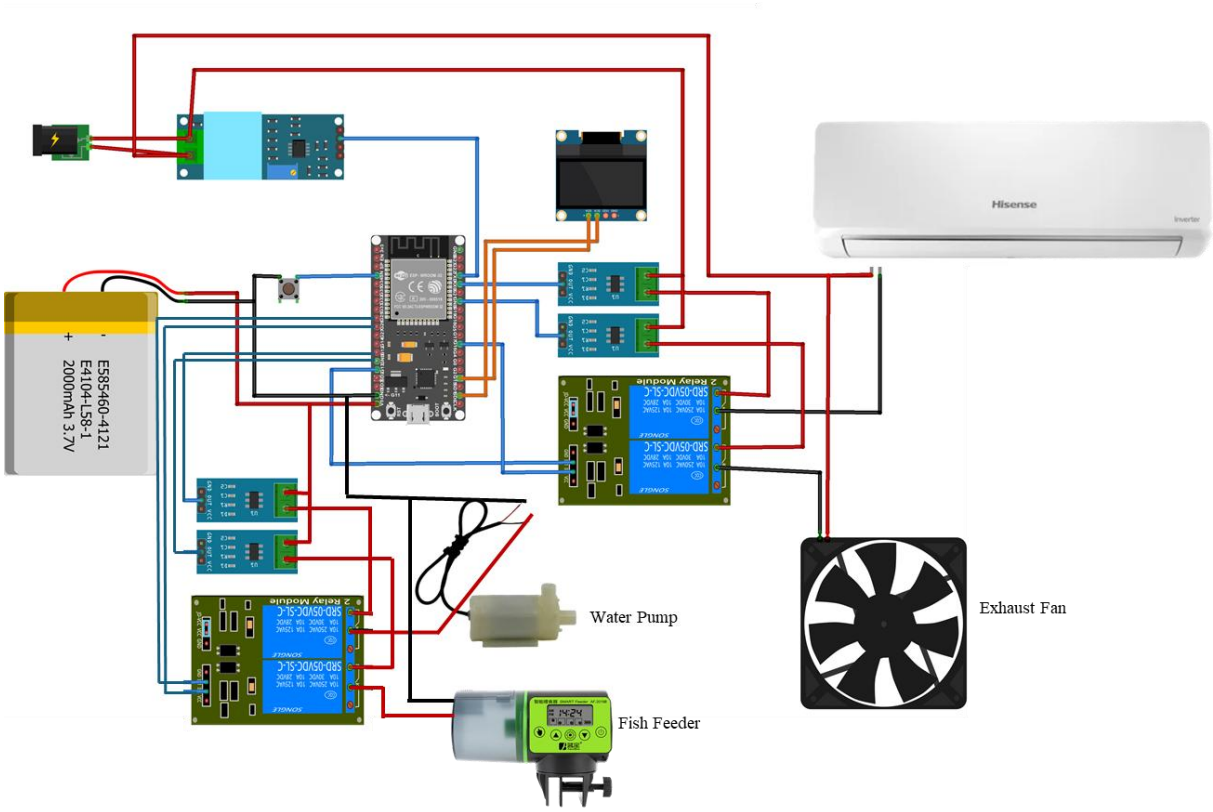

Figure 2: Circuit diagram of the project

Result

The system demonstrated high reliability in both monitoring and automation phases.

- **Web Dashboard:** The custom UI successfully displayed real-time gauges for voltage and current. The login protection effectively restricted control access.

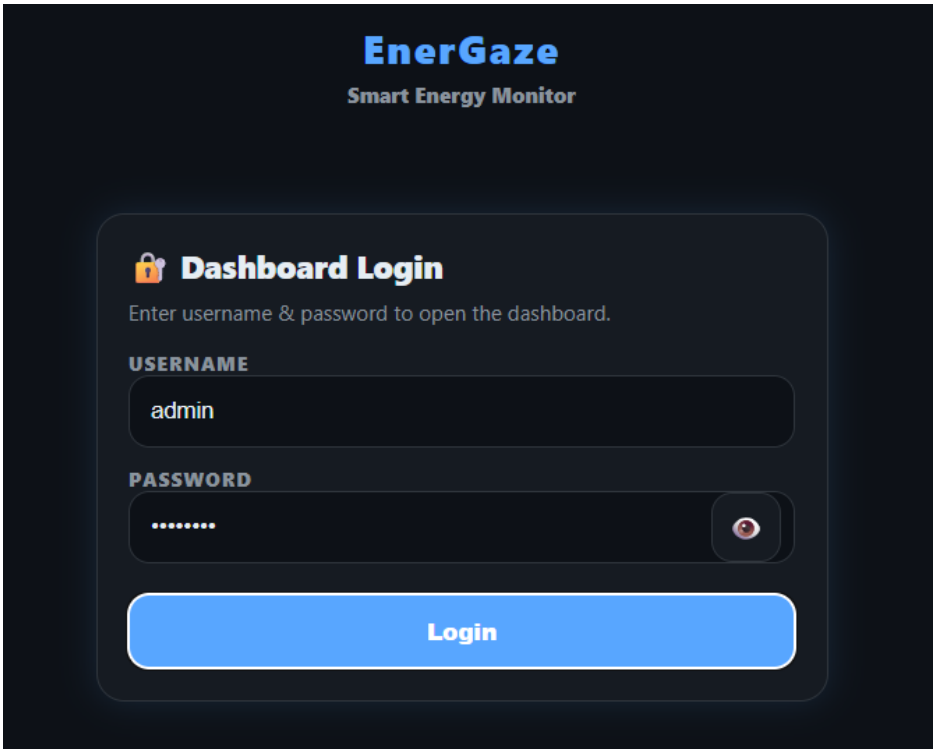
EnerGaze
Smart Energy Monitor
Dashboard Login
Enter username & password to open the dashboard.
USERNAME
admin
PASSWORD
Login

(a)

EnerGaze
Smart Energy Monitor Dashboard
Live
LIVE METRICS
TIMESTAMP (LOCAL)
2026-04-04 23:40:28
VOLTAGE
241.0 V
TOTAL CURRENT
1.71 A
POWER
410.9 W
ENERGY / COST
58.1119 kWh · ৳377.73
HUMIDITY
75.0 %
TEMPERATURE
31.3 °C
Temperature High — AC/FAN started automatically
POWER TREND
410.9 W
min 406 W / max 512 W
512
485
459
432
406
CONSUMPTION & COST
Day
04/04/2026
Calculate
Month
April 2026
Calculate
Year
2026
Calculate
Range
04/04/2026
04/04/2026
Calculate
RANGE: 2026-04-04
0.0000 kWh
COST
৳0.00

(b)

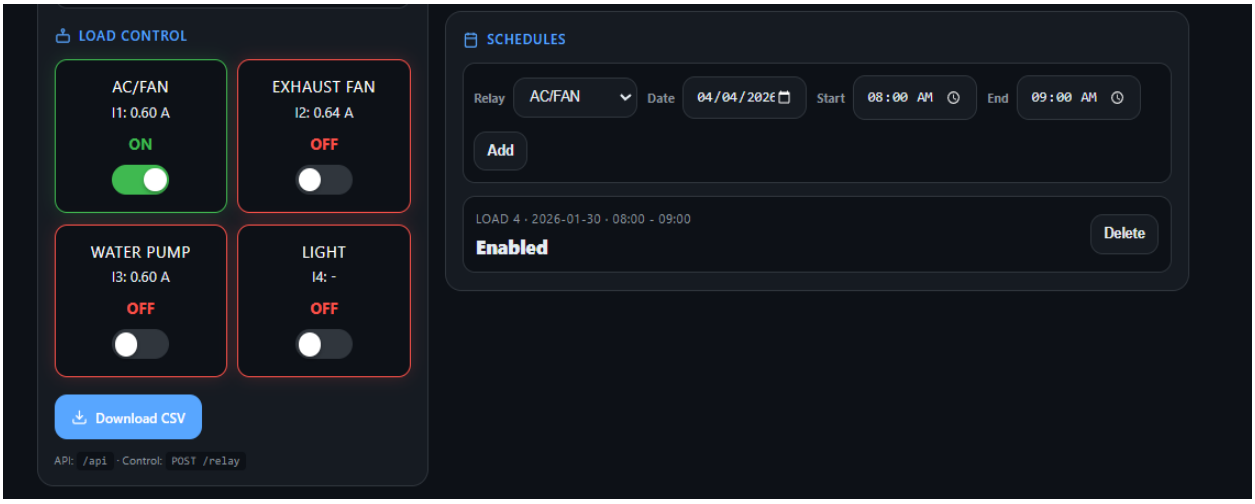

(c)

Figure 3: a) Login page of the dashboard, b) Control Dashboard of the project, c) Control and schedule of loads section.

- **CSV Logging:** Data was consistently logged every minute. Analysis of 370+ samples revealed the model equation: **Power = -29.26 * Temp + 1206.08**.

A	B	C	D	E	F	G	H	I	J	K	L
Timestamp	Epoch	Vrms_V	I1_A	I2_A	I3_A	Totall_A	Power_W	kWh	Cost	Humidity_	Temp_C
2/21/2026 23:21	1.77E+09	277.5	0.235	0.246	0.242	0.723	200.6	0.0021	0.01	62.8	31.8
2/21/2026 23:22	1.77E+09	277.5	0.215	0.227	0.238	0.68	188.8	0.0051	0.03	52.5	31.3
2/21/2026 23:23	1.77E+09	275.4	0.196	0.177	0.193	0.566	155.9	0.0079	0.05	55.2	29.5
2/21/2026 23:24	1.77E+09	273.2	0.214	0.203	0.212	0.629	171.8	0.0108	0.07	58.3	28.2
2/21/2026 23:25	1.77E+09	275.6	0.225	0.219	0.217	0.661	182.2	0.0137	0.09	60.1	27.3

Figure 4: CSV Database

- **Correlation:** A **-0.49 correlation** confirmed that as temperature drops, power consumption rises (detecting heating loads).
- **Safety Response:** Overcurrent protection tripped the relays within 200ms of a threshold breach, preventing hardware damage.
- **Hardware implementation:**

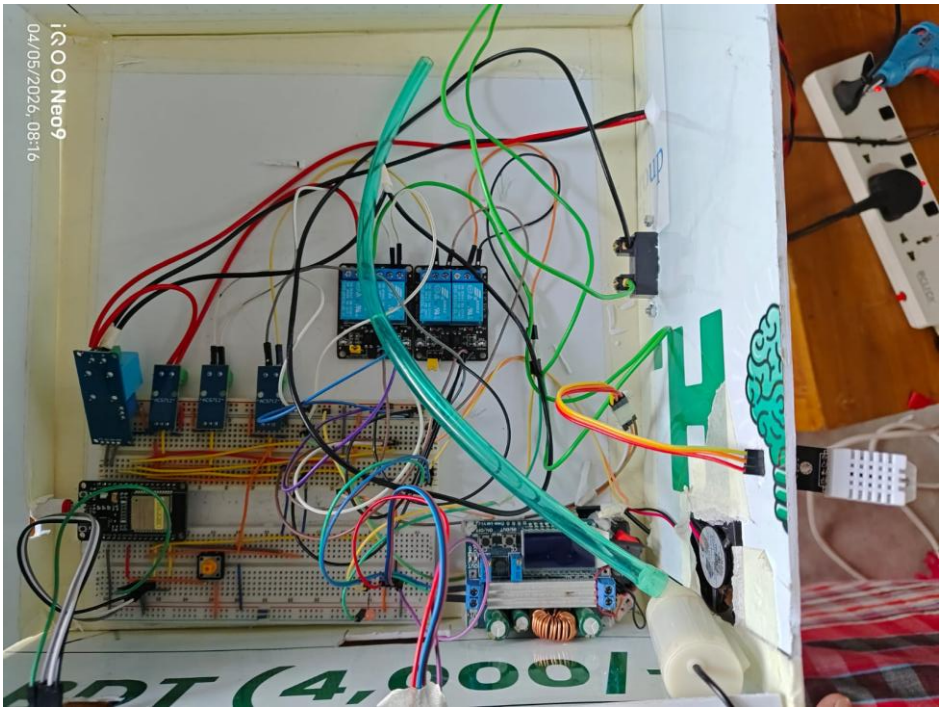

(a)

(b) (c)

Figure 5: a) Top view, b) Right side view, c) Front view of the hardware implementation

Conclusion

EnerGaze successfully bridges the gap between simple energy meters and smart home hubs. By integrating predictive analytics and multi-sensor automation (Ultrasonic/Humidity), the system provides a comprehensive solution for energy saving and safety. The use of local SPIFFS logging and secure web servers

ensures that the system remains functional and safe even during varied network conditions.

Future Works

- **Appliance Fingerprinting:** Implementing advanced ML to identify specific appliances from the total load curve.
- **Mobile Alerts:** Integrating GSM for SMS alerts during fire/overload events.
- **Scheduling:** Enhancing the scheduling system to sync with time-of-use (TOU) electricity pricing to save costs.

Github Repository:

Scan the QR to get into Github Repository below

References

- [1] Espressif Systems, ESP32 Series Datasheet, Version 4.4, Espressif Systems, Shanghai, China, 2023.
- [2] Allegro MicroSystems, Fully Integrated, Hall-Effect-Based Linear Current Sensor IC with 2.1 kVRMS Isolation and a Low-Resistance Current Conductor, ACS712 Datasheet, Rev. 15, Worcester, MA, USA.
- [3] Qingxian Zeming Langxi Electronic, ZMPT101B Current-Type Voltage Transformer Datasheet, Cangzhou, China.
- [4] Blynk Inc., "Blynk IoT Platform API and Mobile Application Documentation," Blynk.io, 2024.