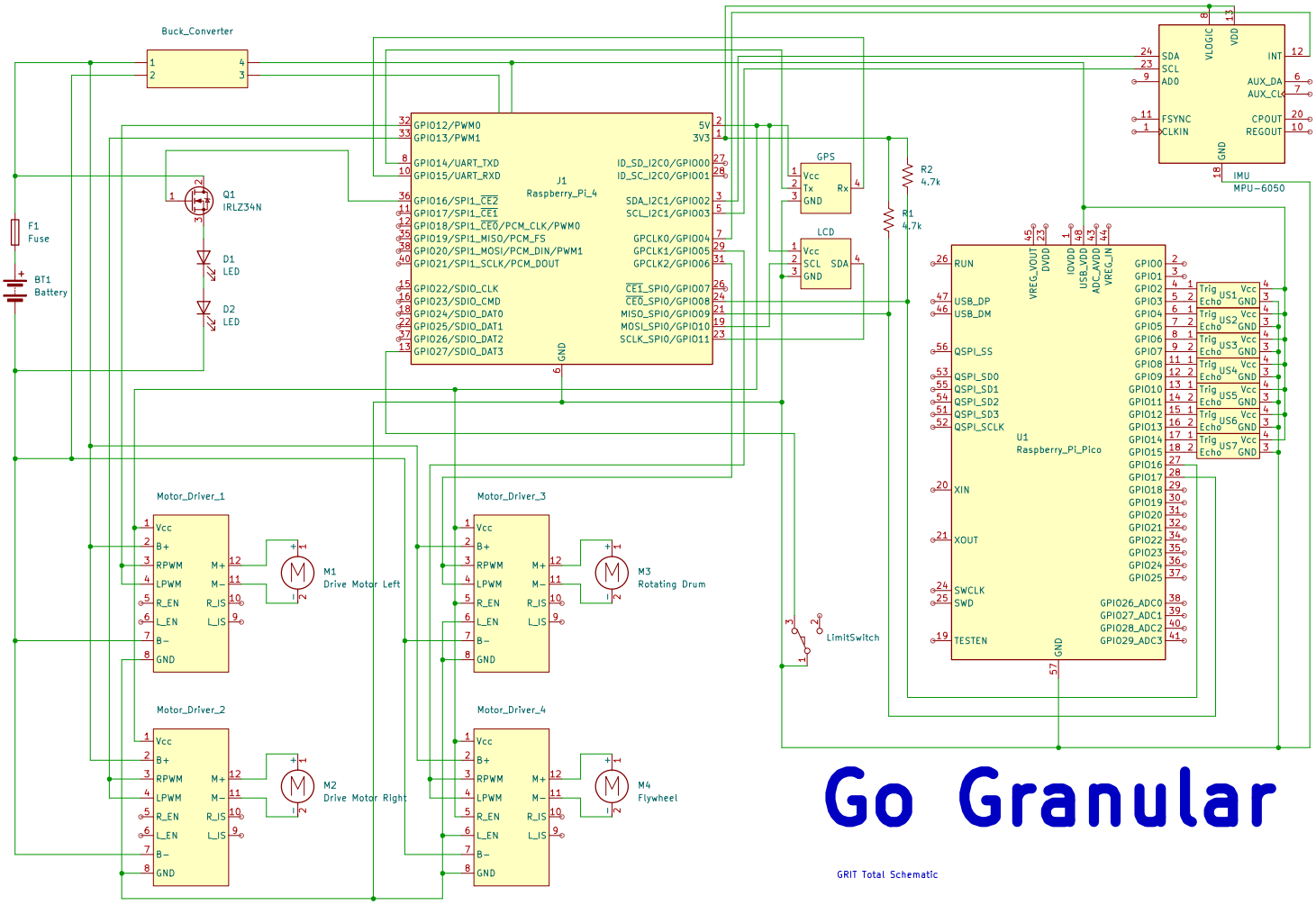

Go Granular

GRIT Total Schematic