Auxiliary Resonant Commutated Pole (ARCP) Converter

Paper 1 — Circuit Diagrams, State Variables, Governing Equations, and Physical Interpretations

De Doncker & Lyons, IEEE IAS 1990

Vignesh

February 26, 2026

Contents

1 How to Use This Document **2**

2 The ARCP Pole Leg — P1 Fig. 5 **2**

3 Commutation from a Conducting Diode — P1 Fig. 7 **9**

4 Commutation from Switch — Low Current (P1 Fig. 8) **25**

5 Commutation from Switch — High Current (P1 Fig. 9) **39**

6 Master Figure Reference Table **46**

1. How to Use This Document

Each figure section follows this standard four-block structure:

1. **Figure** — the extracted PNG from the paper
2. **Circuit Description** (blue box) — what components are present and how they are connected
3. **State Variables & Parameters** (orange box) — every symbol that appears in the figure, with units and typical values
4. **Governing Equations** (green box) — all equations that apply to this circuit state, derived from first principles
5. **Physical Interpretation** (gray box) — what the figure *means*: energy flow, ZVS conditions, design trade-offs

All figures are from: De Doncker & Lyons, *The Auxiliary Resonant Commutated Pole Converter*, IEEE IAS Annual Meeting, 1990.

2. The ARCP Pole Leg — P1 Fig. 5

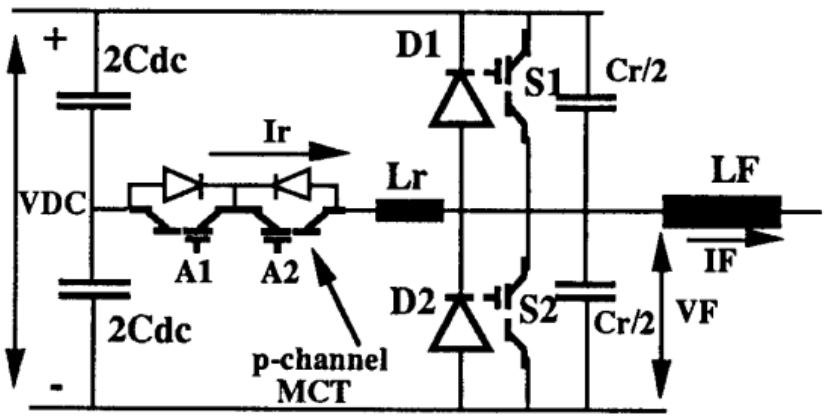

Figure 5. The Auxiliary Resonant Commutated Pole (ARCP).

Figure 1: The Auxiliary Resonant Commutated Pole (ARCP) single phase leg. Source: De Doncker & Lyons, IEEE IAS 1990, p. 3.

Circuit Description — P1 Fig. 5

The ARCP pole leg consists of:

- **DC bus**: split into two equal halves by two $2C_{dc}$ capacitors, creating a midpoint rail at $V_{dc}/2$
- **Main upper device**: S_1 (IGBT) with anti-parallel diode D_1; snubber capacitor $C_r/2$ across S_1

- **Main lower device**: S_2 (IGBT) with anti-parallel diode D_2; snubber capacitor $C_r/2$ across S_2
- **Pole node**: the junction of S_1 and S_2; voltage v_f swings between 0 and V_{dc} during commutation
- **Auxiliary switches**: A_1 and A_2 are back-to-back bidirectional switches (p-channel MCTs) connected between the *DC bus midpoint* and the resonant inductor L_r
- **Resonant inductor**: L_r connects from the A_1/A_2 pair to the pole node; carries auxiliary current i_r
- **Load**: filter inductor L_F and load current I_F at the pole node; V_F is the filtered output voltage

The auxiliary branch (A_1–A_2–L_r) is *only active during commutation.* At steady state $i_r = 0$.

State Variables & Parameters

Symbol	Quantity	Role
v_f	Pole-node voltage	Primary state variable; swings 0 to V_{dc} during commutation
i_r	Auxiliary inductor current	Secondary state variable; drives the C_r swing
I_L	Load current (quasi-static)	Treated as constant disturbance during commutation. Note: labeled I_F in Fig. 5 but written I_L in paper text — same quantity
V_{dc}	DC bus voltage	Forcing potential across the pole
L_r	Auxiliary inductance	Sets boost ramp rate and resonant frequency
C_r	Snubber capacitance	Sets resonant frequency and commutation speed
A_1, A_2	Auxiliary switches (MCTs)	Fire for T_{boost} duration only; silent otherwise

Governing Equations

When do these equations apply? — the exact circuit condition.
These equations are valid only during the brief interval when all of the following are simultaneously true:

- A_1 is **on** — the DC midpoint is connected through L_r to the pole node, so $V_{dc}/2$ drives the auxiliary inductor.
- D_2 has **just stopped conducting** — the pole node is no longer clamped to 0 V and is free to rise.
- Both $C_r/2$ snubber capacitors are free to charge and discharge — no main switch is actively short-circuiting the pole node.

The instant any one of those conditions changes (e.g. D_1 clamps, or A_1 turns off)

the circuit topology changes and different equations take over.

The two circuit equations for this condition.
KCL at the pole node: i_r flows in; I_L flows out to the load; the rest charges the combined snubber capacitance C_r ($= C_r/2$ in parallel with $C_r/2$, seen from the pole node):

$$\frac{dv_f}{dt} = \frac{i_r - I_L}{C_r} \tag{1}$$

KVL around the auxiliary loop (A_1–L_r–pole node): The DC midpoint sits at $V_{dc}/2$. The pole node sits at v_f. The full voltage difference ($V_{dc}/2 - v_f$) appears across L_r and drives the rate of change of i_r:

$$\frac{di_r}{dt} = \frac{V_{dc}/2 - v_f}{L_r} \tag{2}$$

Step 1 — Combine into one equation for v_f alone.
Equation (1) involves both v_f and i_r. Equation (2) tells us how i_r changes. To get a single equation in v_f only, differentiate (1) once with respect to time:

$$\frac{d^2v_f}{dt^2} = \frac{1}{C_r}\frac{di_r}{dt}$$

The right-hand side contains di_r/dt, which is exactly what (2) gives us. Substitute:

$$\frac{d^2v_f}{dt^2} = \frac{1}{C_r} \cdot \frac{V_{dc}/2 - v_f}{L_r} = \frac{V_{dc}/2}{L_rC_r} - \frac{v_f}{L_rC_r}$$

Move the v_f term to the left. Define $\omega_r \triangleq 1/\sqrt{L_rC_r}$ so that $\omega_r^2 = 1/(L_rC_r)$:

$$\ddot{v_f} + \omega_r^2\, v_f = \omega_r^2 \cdot \frac{V_{dc}}{2} \tag{3}$$

This is a *forced harmonic oscillator* — the same form as a spring-mass system driven by a constant force. The right-hand side acts as the "equilibrium point": v_f wants to settle at $V_{dc}/2$ (the DC midpoint), not at zero.

Step 2 — Simplify by measuring from the equilibrium point.
The equilibrium of (3) sits at $v_f = V_{dc}/2$. Working directly with v_f keeps dragging this constant around. A cleaner approach is to measure v_f *relative to* the equilibrium. Define:

$$u \triangleq v_f - \frac{V_{dc}}{2} \qquad \text{(deviation of pole voltage from DC midpoint)}$$

Also, notice that I_L is a constant (load current changes slowly compared to the commutation), so define:

$$j \triangleq i_r - I_L \qquad \text{(auxiliary current above the load current)}$$

Since I_L is constant, $\dot{j} = \dot{i_r}$. Now rewrite (1) and (2) in terms of u and j:

$$\dot{u} = \dot{v_f} = \frac{i_r - I_L}{C_r} = \frac{j}{C_r}$$

$$\dot{j} = \dot{i_r} = \frac{V_{dc}/2 - v_f}{L_r} = \frac{V_{dc}/2 - (u + V_{dc}/2)}{L_r} = \frac{-u}{L_r}$$

The constant $V_{dc}/2$ has dropped out completely. Defining $Z_r \triangleq \sqrt{L_r/C_r}$ (the characteristic impedance of the LC circuit), the final system is:

$$\dot{u} = \frac{j}{C_r}, \qquad \dot{j} = -\frac{u}{L_r} \tag{4}$$

These two equations are symmetric and coupled: u drives j, and j drives u back. This back-and-forth is the hallmark of oscillation.

Step 3 — What shape does the trajectory trace?
From Step 1 we already know that u satisfies $\ddot{u} + \omega_r^2 u = 0$ — simple harmonic motion (SHM), the same equation as a mass on a spring with no friction. Every student of SHM knows that the general solution is a sinusoid:

$$u(t) = u_0 \cos(\omega_r t) + C \sin(\omega_r t)$$

where $u_0 = u(0)$ is fixed by the initial condition and C is determined by the initial velocity. From (4), $\dot{u} = j/C_r$, so at $t = 0$:

$$\dot{u}(0) = \frac{j_0}{C_r} \quad \Longrightarrow \quad C\,\omega_r = \frac{j_0}{C_r} \quad \Longrightarrow \quad C = \frac{j_0}{C_r\,\omega_r}$$

Now $C_r\,\omega_r = C_r/\sqrt{L_r C_r} = \sqrt{C_r/L_r} = 1/Z_r$, so $C = j_0 Z_r$. The explicit solution for $u(t)$ is:

$$u(t) = u_0 \cos(\omega_r t) + j_0 Z_r \sin(\omega_r t) \tag{5}$$

Now get $j(t)$ directly from (4): $j = C_r \dot{u}$. Differentiate (5) and multiply by C_r:

$$\begin{aligned} j(t) &= C_r\big[-u_0\,\omega_r \sin(\omega_r t) + j_0 Z_r\,\omega_r \cos(\omega_r t)\big] \\ &= C_r\,\omega_r\big[-u_0 \sin(\omega_r t) + j_0 Z_r \cos(\omega_r t)\big] \end{aligned}$$

Using $C_r\,\omega_r = 1/Z_r$ again:

$$j(t) = -\frac{u_0}{Z_r}\sin(\omega_r t) + j_0 \cos(\omega_r t) \tag{6}$$

We now have explicit expressions for both $u(t)$ and $j(t)$. Define two new coordinates:

$$X \triangleq u, \qquad Y \triangleq j\,Z_r$$

(Y is simply j rescaled so that both axes carry the same units of volts.) Writing out X and Y:

$$\begin{aligned} X &= u_0 \cos(\omega_r t) + j_0 Z_r \sin(\omega_r t) \\ Y &= j Z_r = -u_0 \sin(\omega_r t) + j_0 Z_r \cos(\omega_r t) \end{aligned}$$

Now compute $X^2 + Y^2$, expanding term by term:

$$\begin{aligned} X^2 &= u_0^2 \cos^2(\omega_r t) + 2u_0 j_0 Z_r \cos(\omega_r t)\sin(\omega_r t) + j_0^2 Z_r^2 \sin^2(\omega_r t) \\ Y^2 &= u_0^2 \sin^2(\omega_r t) - 2u_0 j_0 Z_r \sin(\omega_r t)\cos(\omega_r t) + j_0^2 Z_r^2 \cos^2(\omega_r t) \end{aligned}$$

Adding: the cross terms ($\pm 2u_0 j_0 Z_r \cos\sin$) cancel exactly, and $\cos^2 + \sin^2 = 1$ collapses each remaining pair:

$$X^2 + Y^2 = u_0^2 \underbrace{(\cos^2 + \sin^2)}_{1} + j_0^2 Z_r^2 \underbrace{(\sin^2 + \cos^2)}_{1} = u_0^2 + (j_0 Z_r)^2 \tag{7}$$

The right-hand side is a *constant* (set by the initial conditions, not by time). Therefore, as t increases, the point $(X, Y) = (u,\, jZ_r)$ moves along a **circle** of radius:

$$R = \sqrt{u_0^2 + (j_0 Z_r)^2}$$

centred at the origin of the $(u,\, jZ_r)$ plane, which is the point $(v_f,\, jZ_r) = (V_{dc}/2,\, 0)$ in the original coordinates.

Initial conditions and the radius of the circle.
Just before the resonant swing begins, D_2 is still conducting and pins $v_f = 0$. The boost phase has already ramped i_r up to $I_L + i_{\text{boost}}$. So:

$$u_0 = 0 - \frac{V_{dc}}{2} = -\frac{V_{dc}}{2}, \qquad j_0 = (I_L + i_{\text{boost}}) - I_L = i_{\text{boost}} \tag{8}$$

Substituting into (7):

$$R = \sqrt{\left(\frac{V_{dc}}{2}\right)^2 + (i_{\text{boost}}\, Z_r)^2} \tag{9}$$

How does the phase plane connect to time?
The phase plane has no time axis, so it is not obvious how a longer or shorter arc corresponds to a longer or shorter commutation. The answer comes directly from the parametric solution (5)–(6), which we can write as:

$$X(t) = u(t), \qquad Y(t) = j(t) Z_r, \qquad \text{where the parameter is } \theta = \omega_r t$$

Every time step Δt advances the angle θ by exactly $\omega_r\, \Delta t$, regardless of where on the circle the trajectory currently sits. Therefore the time taken to travel from the start angle θ_{start} to the end angle θ_{end} is:

$$T_{\text{comm}} = \frac{\theta_{\text{end}} - \theta_{\text{start}}}{\omega_r}$$

A smaller swept angle means a shorter commutation time.
How does i_{boost} change the swept angle?
All three trajectories in Figure 2 start at the same $v_f = 0$ (i.e. $u_0 = -V_{dc}/2$) but at different heights $j_0 Z_r = i_{\text{boost}} Z_r$ on the vertical axis. The target is always $v_f = V_{dc}$ (i.e. $u = +V_{dc}/2$). A higher starting point is already closer (in angle) to the target on the right side of the circle, so less angle needs to be swept. The extreme case is $i_{\text{boost}} = 0$: the trajectory starts exactly on the horizontal axis at $(-V_{dc}/2,\ 0)$ and must sweep a full π radians (a semicircle) to reach $(+V_{dc}/2,\ 0)$, taking time π/ω_r. Every additional ampere of boost lifts the starting point, reduces the angle to be swept, and shortens the commutation time.

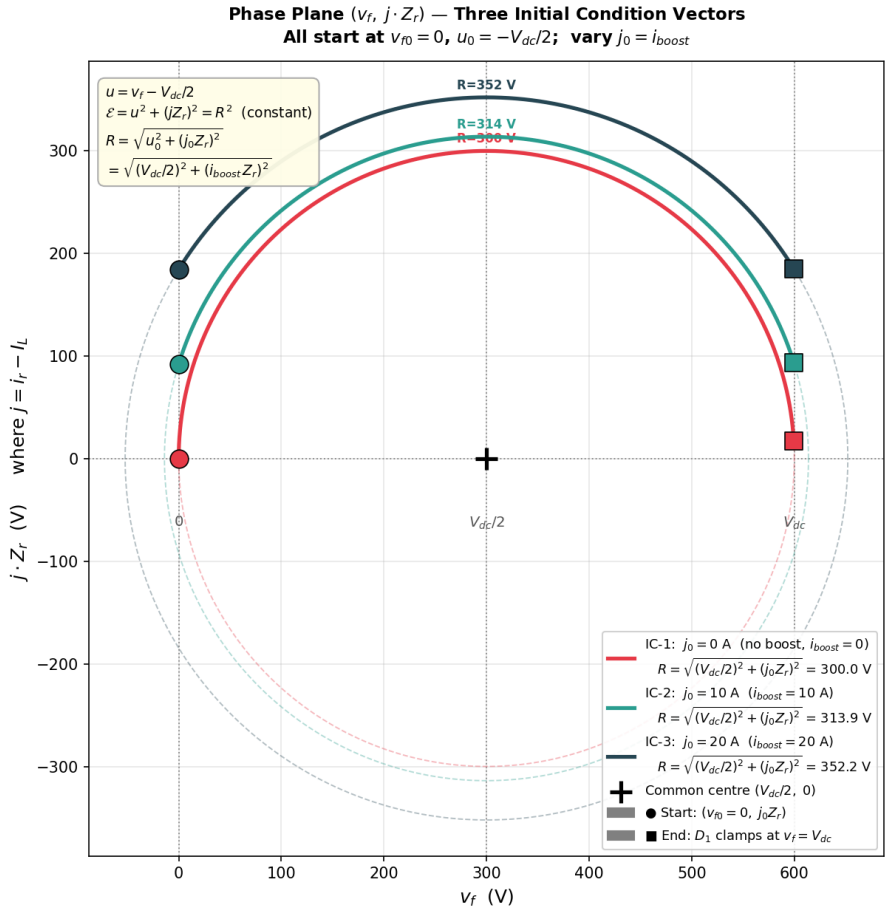

Figure 2: Phase-plane trajectories for three initial condition vectors ($j_0 = 0,\ 10,\ 20\,\mathrm{A}$), all starting at $v_f = 0$. Each trajectory is a circular arc with radius given by (9). Solid circles mark the start; squares mark where D_1 clamps ($v_f = V_{dc}$). The dashed arcs show the full circles of which only the solid portions execute physically.

Physical Interpretation

1. Why ZVS eliminates switching loss

Consider closing any switch (here an IGBT S_1) in a circuit. The switch transitions from fully off to fully on in a short but finite time t_{sw}. During that transition:

- there is a voltage V_{S_1} across the switch (it has not yet fully turned on), *and*
- there is a current I_{S_1} flowing through it (the load is already demanding current).

Instantaneous power dissipated in the switch $= V_{S_1} \times I_{S_1}$. Integrated over the transition, this gives an **energy loss every single switching cycle**. At high switching frequencies (tens of kHz to MHz) these losses add up and heat the switch, reducing efficiency and requiring large heatsinks.

Zero-voltage switching eliminates this loss by a simple idea: *ensure the voltage across S_1 is zero at the exact moment you fire it.* Then $P = 0 \times I_{S_1} = 0$ regardless of how large the current is — the switch turns on for free.

How does the ARCP achieve ZVS for S_1?

The voltage across S_1 is

$$V_{S_1} = V_{dc} - v_f$$

because the upper terminal of S_1 sits at V_{dc} and the lower terminal (the pole node) sits at v_f. For $V_{S_1} = 0$ we need $v_f = V_{dc}$.
So the entire job of the resonant swing is: *drive v_f from 0 all the way up to V_{dc} before S_1 is fired.* Once v_f reaches V_{dc}, the diode D_1 clamps it there — D_1 is the anti-parallel diode of S_1, with its cathode at the positive rail (V_{dc}) and its anode at the pole node (v_f). The moment v_f tries to *exceed* V_{dc}, the pole node (anode of D_1) rises fractionally above the positive DC rail (cathode of D_1); D_1 becomes forward-biased and starts conducting, diverting i_r away from *both* $C_r/2$ snubber capacitors and into the positive DC rail directly. To see why both are involved: during the resonant swing i_r was simultaneously charging the $C_r/2$ across S_2 (from 0 up to V_{dc}) *and* discharging the $C_r/2$ across S_1 (from V_{dc} down to 0). When $v_f = V_{dc}$, both processes complete at the same instant — the $C_r/2$ across S_2 is fully charged, and the $C_r/2$ across S_1 is fully discharged to zero. D_1 conducts and locks v_f at V_{dc}, so neither cap can change further; i_r flows through D_1 into the bus instead. S_1 now has $V_{S_1} = V_{dc} - v_f = 0$ and can be gated on with no switching loss.

2. Why $R \geq V_{dc}/2$ is the ZVS geometric condition

We proved that the resonant swing traces a circle in the $(v_f,\, jZ_r)$ plane with:

- **Centre** at $v_f = V_{dc}/2$ (the DC midpoint)
- **Radius** $R = \sqrt{(V_{dc}/2)^2 + (j_0 Z_r)^2}$

The rightmost point the trajectory can reach is

$$v_f^{\max} = \frac{V_{dc}}{2} + R$$

For v_f to reach V_{dc} (the ZVS target), we need:

$$\frac{V_{dc}}{2} + R \geq V_{dc} \quad \Longrightarrow \quad R \geq \frac{V_{dc}}{2}$$

Substituting the radius formula:

$$\sqrt{\left(\frac{V_{dc}}{2}\right)^2 + (j_0 Z_r)^2} \geq \frac{V_{dc}}{2}$$

This is automatically true for *any* $j_0 \geq 0$, because $\sqrt{a^2 + b^2} \geq a$ whenever $b \geq 0$.

What goes wrong when $j_0 < 0$?

$j_0 = i_r(0) - I_L$ is the auxiliary current *above* the load current at the start of the swing. If $j_0 < 0$ (i.e. $i_r < I_L$), the net current charging C_r is negative: from equation (1), $\dot{v_f} = j_0/C_r < 0$. The pole voltage *falls* initially instead of rising. In the phase plane this means the trajectory starts going in the wrong direction — downward and to the left — before eventually looping back. Physically, diode D_2 immediately clamps v_f at 0 and prevents it from going negative, so the commutation *fails*. This is visible in the IC-1 trajectory ($j_0 = 0$) of Figure 2: the trajectory starts horizontally (neither rising nor falling), which is the marginal case.

3. Why a boost phase is needed
At light load the current I_L is small. When S_2 is turned off, the only current available to charge C_r and raise v_f is I_L itself ($i_r = 0$ initially). If I_L is too small, v_f rises too slowly and cannot reach V_{dc} within the available commutation window — S_1 would have to be fired before $v_f = V_{dc}$, causing hard switching and energy loss.
The boost phase solves this by pre-charging the resonant inductor L_r:

1. A_1 fires briefly; i_r ramps up linearly from 0 to $I_L + i_{\text{boost}}$.
2. A_1 turns off; the swing begins with $j_0 = i_{\text{boost}} > 0$.
3. A positive j_0 gives a radius $R > V_{dc}/2$, the trajectory goes in the right direction, and v_f reaches V_{dc} — ZVS is achieved even at light load.

The larger i_{boost} is, the larger R becomes, and the more quickly v_f swings to V_{dc}. At heavy load (I_L large), the load current alone is sufficient ($j_0 = 0$ is the marginal case) and no boost is needed — this is called *natural commutation*.

4. C_r design trade-off: commutation energy vs. turn-off dv/dt stress
Reason to make C_r small — reduce commutation energy: Each time the pole commutates, C_r must be fully charged from 0 to V_{dc} (or discharged from V_{dc} to 0). The energy moved in and out of C_r every commutation is

$$E_{C_r} = \tfrac{1}{2} C_r V_{dc}^2$$

This energy is supplied by the auxiliary inductor L_r (via the boost and resonant swing) and ultimately comes from the DC bus. Smaller C_r means less energy wasted on every switching event.
Reason not to make C_r too small — limit the voltage slew rate: When S_2 turns off, its current does not disappear instantly — it diverts into C_r and begins charging it. The rate at which the voltage across S_2 rises is

$$\frac{dv_f}{dt} = \frac{i_r - I_L}{C_r}$$

If C_r is very small, this rate becomes very large — the voltage across S_2 spikes up extremely fast. Real IGBTs and MOSFETs have a finite tolerance for how fast their blocking voltage can rise (dv/dt rating). Exceeding it causes extra losses, gate-ringing, or device failure.
Summary — the design trade-off: Choose C_r small enough that $E_{C_r} = \frac{1}{2} C_r V_{dc}^2$ is acceptably small, yet large enough that the turn-off dv/dt stays within the switch's rating.

3. Commutation from a Conducting Diode — P1 Fig. 7

Big picture — what is Fig. 7 teaching?

An inverter pole-leg has one job: connect the output node (the pole node, v_f) to either the positive rail (V_{dc}) or the negative rail (0 V). Switching between these two states is called **commutation**.

In a hard-switched inverter you would simply turn off the lower device and fire the upper device. That sounds simple, but during the brief transition the switch carries both a large voltage *and* a large current simultaneously, dissipating energy as heat on every single switching cycle.

Figure 3 answers the question: *how does the ARCP solve this, step by step, starting from the moment D_2 is conducting?*

The word "from diode" describes the *starting condition*: the load current I_L is flowing upward through the pole node into the load, and the only path available for this current on the lower side is the anti-parallel diode D_2. The converter must now move v_f from 0 all the way up to V_{dc} so that the upper switch S_1 can be turned on at zero voltage (ZVS). Figure 3 shows the exact sequence of seven circuit states — (a) through (g) — that accomplish this safely.

How each state is drawn. Every sub-figure in Figure 3 is a pair of two panels:

- **Top panel — the waveform strip.** This shows $i_r(t)$ and $v_f(t)$ on a shared time axis covering the *entire* commutation from state (a) to state (g). Vertical dashed lines divide the axis into strips; each strip is labelled at the bottom with the device(s) that are conducting during that interval (e.g. *D2*, *D2/A2*, *Cr/A2*, *S1*). A horizontal reference line on the i_r plot marks the load current level I_L. The sub-figure letter tells you which strip you are currently in.
- **Bottom panel — the circuit snapshot.** This strips the full ARCP schematic down to only the devices that are conducting right now; their current paths are drawn in bold. Everything else is open. It is a "frozen frame" of the circuit topology for the labelled time strip.

Reading both panels together for each state builds the complete physical picture: you see *where in time* you are (waveform) and *which path the current takes* (circuit snapshot) simultaneously.

State (a) — D_2 conducting: the resting state before commutation

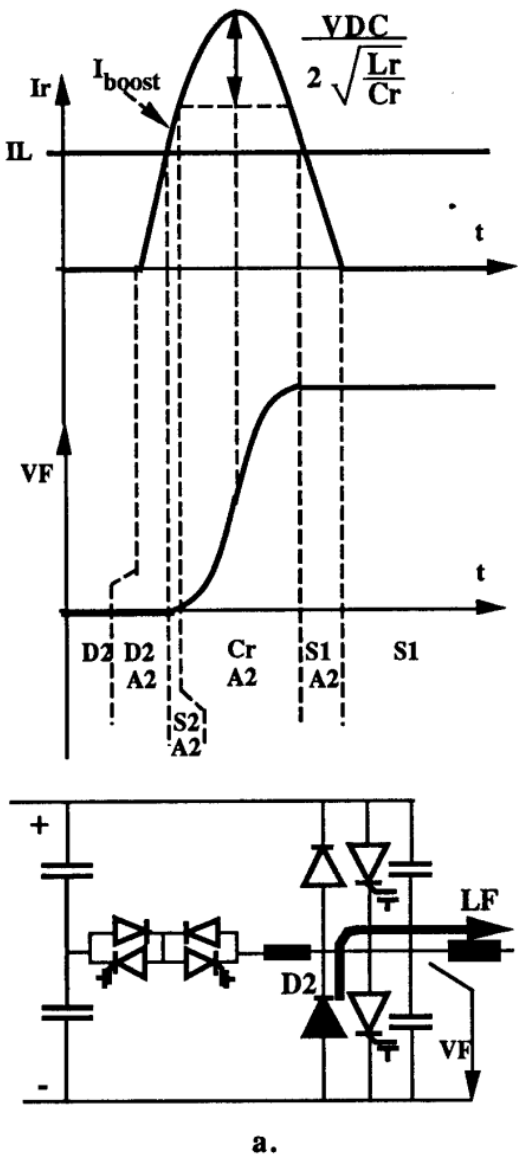

Figure 3: P1 Fig. 7(a) — D_2 conducting: initial resting state. $v_f = 0$, $i_r = 0$. Top panel: full commutation waveform with state (a) strip highlighted. Bottom panel: circuit snapshot showing D_2 as the only active path. Source: De Doncker & Lyons, IEEE IAS 1990, p. 4.

Top panel (waveform) — what you see in the state (a) strip.

State (a) occupies the leftmost strip of the waveform, labelled *D2*. Both traces are completely flat throughout this strip:

- $i_r = 0\,\mathrm{A}$ — no current flows in the resonant branch at all. The auxiliary inductor L_r is at rest.
- $v_f = 0\,\mathrm{V}$ — the pole node is pinned to the negative DC rail.

This strip has no fixed duration. It lasts as long as the PWM lower-side conduction period lasts — anywhere from a few microseconds to tens of microseconds depending

on the modulation index and load. What matters is not how long state (a) lasts, but the two numbers it establishes before commutation begins:

$$v_f(0^-) = 0\,\mathrm{V}, \qquad i_r(0^-) = 0\,\mathrm{A} \tag{10}$$

These are the initial conditions that every subsequent calculation in states (b) through (g) is built on.

Bottom panel (circuit snapshot) — what is conducting and why.

Only D_2 appears with a bold current path; all other devices are open. The load current I_L flows along the path:

$$\text{negative DC rail} \longrightarrow D_2 \longrightarrow \text{pole node} \longrightarrow L_F \longrightarrow \text{load}$$

D_2 is not actively driven by any gate signal — it is a diode. It conducts simply because I_L pushes current in the upward direction and D_2 is the only forward-biased path on the lower side of the pole. The two snubber capacitors ($C_r/2$ across S_1 and $C_r/2$ across S_2) sit at fixed voltages: the one across S_1 is charged to V_{dc} (full bus voltage); the one across S_2 is discharged to 0 V (short-circuited by the conducting D_2). The main switches S_1, S_2 and both auxiliary back-to-back switches A_1, A_2 are all open.

Why this state exists — what it does for the system.

State (a) is the *resting state between switching events*. Its role is to guarantee that when a commutation is eventually triggered, the circuit starts from a fully known, clean condition (equation (10)). If i_r were not zero at the start — for example, if a previous commutation had not fully reset the auxiliary branch — the resonant swing would start from a different initial point and the ZVS condition might fail. State (a) ensures the slate is wiped clean every cycle.

State (b) — A_2 fires: the boost phase begins

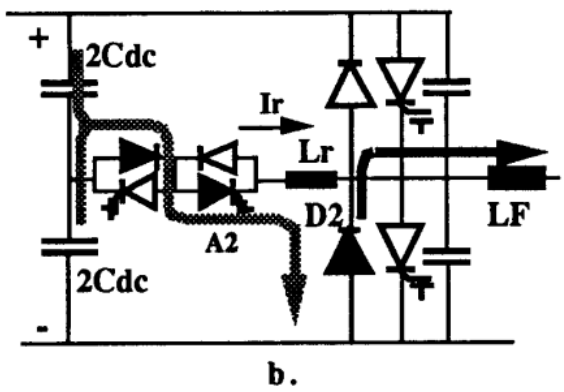

Figure 4: P1 Fig. 7(b) — A_2 fires: i_r begins ramping linearly from zero. D_2 still conducts and keeps $v_f = 0$. Top panel: i_r strip rising linearly in the *D2/A2* region. Bottom panel: bold paths show A_2 and D_2 both conducting. Source: De Doncker & Lyons, IEEE IAS 1990, p. 4.

What triggers this state.

The control logic decides it is time to commutate from D_2 to S_1. It fires the auxiliary switch A_2 — the lower half of the back-to-back bidirectional switch pair on the left of the pole leg (see Figure 4, bottom panel).

Top panel (waveform) — what you see in the state (b) strip.

We are now in the second strip, labelled *D2/A2* in the waveform of Figure 3.

- i_r starts rising from 0 in a straight line — a *linear ramp*. The slope is constant throughout this strip.
- v_f is still completely flat at 0 V.

Bottom panel (circuit snapshot) — two devices conducting at once.

Two current paths are active simultaneously (both drawn bold):

1. **The new A_2–L_r path:** A_2 connects the DC bus midpoint (held at $V_{dc}/2$ by the two $2C_{dc}$ capacitors) to one terminal of L_r. The other terminal of L_r connects to the pole node, which is still clamped at 0 V by D_2. So the full voltage $V_{dc}/2 - 0 = V_{dc}/2$ appears across L_r, driving i_r to ramp upward.
2. **The continuing D_2–load path:** The load current I_L still needs a return path to the negative rail. D_2 provides it, carrying the *difference* $I_L - i_r$ (which decreases as i_r rises). While D_2 conducts, it clamps v_f firmly at 0 V. This in turn keeps the full $V_{dc}/2$ across L_r, maintaining the constant ramp rate.

Why the ramp is linear — the inductor equation.

An inductor obeys $V_{L_r} = L_r \dfrac{di_r}{dt}$. Rearranging:

$$\frac{di_r}{dt} = \frac{V_{L_r}}{L_r} = \frac{V_{dc}/2}{L_r} = \frac{V_{dc}}{2L_r} \tag{11}$$

The right-hand side is a constant (both V_{dc} and L_r are fixed). A constant di_r/dt means i_r increases at a *constant rate* — a straight line on the waveform. Starting from $i_r(0^-) = 0$:

$$i_r(t) = \frac{V_{dc}}{2L_r}\, t \tag{12}$$

Why $V_{dc}/2$ and not V_{dc}?

The auxiliary branch is connected to the *DC bus midpoint*, not to the full positive rail. The midpoint is created by two $2C_{dc}$ capacitors that split the bus exactly in half. Using the midpoint halves the driving voltage, which halves the ramp rate and gives the control system more time to hit its current target precisely. If the full V_{dc} were used, i_r would ramp twice as fast and the timing would be harder to control.

What ends this state.

State (b) ends when i_r rises to exactly I_L. At that point the current D_2 must supply becomes zero ($I_L - i_r = 0$), and D_2 turns off *naturally* — no gate signal is needed, the diode simply stops conducting because it has no more current to carry. A_2 is *not* turned off here; it stays on. The control system detects (or predicts) this moment and immediately fires S_2, which takes over from D_2 and keeps $v_f = 0$. The circuit then enters state (c).

State (c) — boost complete: $i_r = I_L + i_{\text{boost}}$, resonant swing about to begin

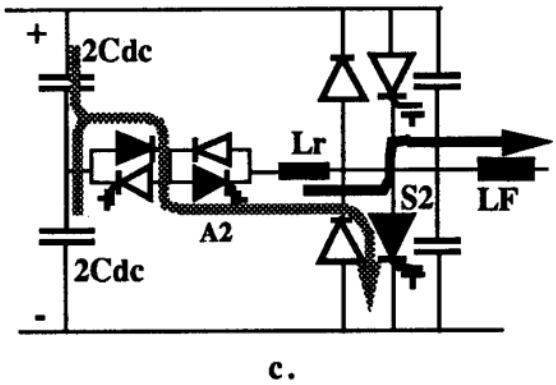

Figure 5: P1 Fig. 7(c) — Boost complete. i_r has reached $I_L + i_{\text{boost}}$; v_f is still 0. A_2 and S_2 are both conducting; D_2 is off. Source: De Doncker & Lyons, IEEE IAS 1990, p. 4.

Top panel (waveform) — what you see in the state (c) strip.

We are now in the third strip of the waveform (Figure 3), labelled *S2/A2*.

- i_r is *still rising* linearly, continuing the ramp that started in state (b), but now from I_L toward $I_L + i_{\text{boost}}$. The slope is the same constant value $V_{dc}/(2L_r)$ as before, because A_2 is still on and v_f is still held at 0 V.
- v_f remains flat at 0 V — clamped as before, just by a different device (see circuit snapshot below).

The strip ends when $i_r = I_L + i_{\text{boost}}$ and S_2 is turned off.

Bottom panel (circuit snapshot) — why did D_2 disappear and why is S_2 here?

Two devices are bold in Figure 5: A_2 and S_2. D_2 is no longer active. Here is why each device changed role.

Why D_2 dropped out.

D_2 is a diode. A diode can only push current in one direction. In state (b), D_2 was supplying the *deficit* current $I_L - i_r > 0$ — current flowing from the 0 V rail into the pole node to make up the difference between I_L and the smaller i_r. As i_r climbed toward I_L, this deficit shrank. The moment $i_r = I_L$, the deficit reached zero and D_2 had nothing left to supply. A diode carrying zero current simply turns off; there is no gate signal involved — it stops conducting on its own.

Why S_2 is fired.

Once D_2 turns off, nothing is holding v_f at 0 V. With A_2 still on and i_r still flowing, the excess current $i_r - I_L > 0$ would immediately start charging the snubber capacitors and lifting v_f. If we let that happen now, the resonant swing would begin with $j_0 = i_r - I_L \approx 0$ — barely above the marginal ZVS threshold.

To get a larger margin of safety — a larger circle radius R in the phase plane — we

want $j_0 = i_{\text{boost}} > 0$ at the start of the swing. The control achieves this by firing S_2 the instant D_2 turns off.

S_2 is an IGBT: an actively controlled switch that can carry current in *both* directions (unlike the diode D_2). With S_2 on, the pole node is held at 0 V by the switch, not the diode. The excess current $i_r - I_L$ now flows *down* through S_2 into the negative rail (as shown by the downward arrow on S_2 in the circuit snapshot). This allows the boost to continue past I_L while v_f stays at 0 V.

The full picture at the end of state (c).

By the time i_r reaches $I_L + i_{\text{boost}}$, we have:

$$v_f = 0\,\text{V} \qquad \text{and} \qquad i_r = I_L + i_{\text{boost}} \tag{13}$$

These are the *initial conditions for the resonant swing.* In the shifted coordinates of the phase plane:

$$u_0 = v_f - \frac{V_{dc}}{2} = -\frac{V_{dc}}{2}, \qquad j_0 = i_r - I_L = i_{\text{boost}}$$

giving a circle radius $R = \sqrt{(V_{dc}/2)^2 + (i_{\text{boost}}\, Z_r)^2}$, which is larger the more boost current we add.

What ends this state — and how the resonant swing is triggered.

Step 1 — What the control does.

The control monitors i_r and turns off S_2 the moment $i_r = I_L + i_{\text{boost}}$ is reached. A_2 stays on.

Step 2 — Where was the current going before S_2 opened?

Just before S_2 turns off, the current balance at the pole node is:

$$\underbrace{i_r}_{\text{in from } L_r} = \underbrace{I_L}_{\text{out to load}} + \underbrace{(i_r - I_L)}_{\text{down through } S_2 \text{ to lower rail}}$$

S_2 is carrying the small excess $i_r - I_L = i_{\text{boost}}$ downward. Everything is in balance and $v_f = 0$.

Step 3 — What happens the instant S_2 opens?

An open switch carries zero current. The i_{boost} that was flowing through S_2 *must go somewhere* — current in an inductor cannot disappear instantaneously. With S_2 open and D_2 already off, the only paths left at the pole node are the load (I_L) and the two snubber capacitors.

Why the effective capacitance at the pole node is the full C_r, not $C_r/2$.

When S_2 opens, the pole node is connected to two capacitors:

- $C_r/2$ between the pole node and the **0 V rail** (the snubber across S_2)
- $C_r/2$ between the pole node and the V_{dc} **rail** (the snubber across S_1)

Both rails — 0 V and V_{dc} — are held at *fixed voltages* by the large $2C_{dc}$ bus capacitors. No matter what happens at the pole node, these rails do not move. In circuit terms, both rails are **AC grounds**.

From the pole node's point of view, therefore, both $C_r/2$ capacitors are connected between the pole node and a fixed reference. This makes them **effectively in parallel**:

$$C_{\text{eff}} = \frac{C_r}{2} + \frac{C_r}{2} = C_r$$

When v_f rises, the pole node must supply current to *both* capacitors simultaneously — one charges toward V_{dc}, the other discharges toward 0 V — but both demand current from the same pole node. The KCL at the pole node is therefore:

$$i_r \;=\; I_L + \underbrace{\frac{C_r}{2}\frac{dv_f}{dt}}_{\text{into } C_r/2 \text{ across } S_2} + \underbrace{\frac{C_r}{2}\frac{dv_f}{dt}}_{\text{into } C_r/2 \text{ across } S_1} \;=\; I_L + C_r\frac{dv_f}{dt} \tag{14}$$

Rearranging and evaluating at $t = 0^+$, where i_r is still $I_L + i_{\text{boost}}$ (inductor current cannot jump instantaneously):

$$C_r \left.\frac{dv_f}{dt}\right|_{t=0^+} = i_r - I_L = i_{\text{boost}} \quad\Longrightarrow\quad \left.\frac{dv_f}{dt}\right|_{t=0^+} = \frac{i_{\text{boost}}}{C_r} \tag{15}$$

v_f immediately starts rising from 0 at a rate set by i_{boost} and the *total* pole capacitance C_r. This is the first instant of the resonant LC swing — state (d) has begun.

Step 4 — Why is the turn-off of S_2 relatively clean?

In a hard-switched converter, a switch turns off while carrying the full load current I_L (which can be tens or hundreds of amperes). The current snaps off abruptly and the energy $\frac{1}{2}L_{\text{stray}}I^2$ stored in stray wiring inductance causes a large voltage spike across the switch.

Here S_2 carries only $i_{\text{boost}} = i_r - I_L$ at the moment it turns off. i_{boost} is a *control parameter* that the engineer can keep small. Moreover, the current does not snap off into stray inductance — it commutates smoothly into C_r, which absorbs it without a spike. v_f rises at the finite rate i_{boost}/C_r rather than jumping discontinuously. This is why the turn-off of S_2 is described as *near-zero-current switching* (near-ZCS): the current being interrupted is small and the voltage transition is smooth.

State (d) — the resonant LC swing: v_f rises from 0 to V_{dc}

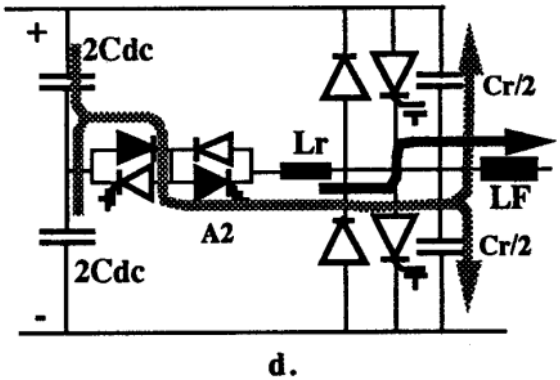

Figure 6: P1 Fig. 7(d) — Resonant LC swing. v_f rises in an S-curve from 0 to V_{dc}; i_r peaks then falls. A_2 remains on; both $C_r/2$ snubbers are active (labelled). No main switch or diode conducts. Source: De Doncker & Lyons, IEEE IAS 1990, p. 4–5.

State (d) is the reason the ARCP exists.

Everything in states (a)–(c) was preparation: ramping i_r to the right starting value, establishing the right initial voltage. State (d) is where those initial conditions are put to work: the resonant swing carries v_f all the way from 0 to V_{dc}, enabling S_1 to be turned on at zero voltage.

Top panel (waveform) — what you see in the state (d) strip.

We are in the fourth strip of the waveform in Figure 3, labelled *Cr/A2*.

- v_f rises in a smooth *S-shaped curve* from 0 towards V_{dc}. It does not ramp linearly — it follows a sinusoidal shape, slow at first, fastest at the midpoint $V_{dc}/2$, then slowing again as it approaches V_{dc}.
- i_r first *rises* above its starting value $I_L + i_{\text{boost}}$, reaches a peak, then *falls* back down. The peak occurs when v_f passes through $V_{dc}/2$.

Bottom panel (circuit snapshot) — only A_2, L_r, and the two $C_r/2$ caps.

Looking at Figure 6: A_2 is the only switch conducting. Both $C_r/2$ snubbers are explicitly labelled and shown with bold connections — one charging (across S_1, from 0 towards V_{dc}) and one discharging (across S_2, from V_{dc} towards 0). All other devices — S_1, S_2, D_1, D_2 — are open.

Why A_2 must stay on during the swing.

There are two reasons, one mandatory and one physical.

Reason 1 (mandatory) — an inductor carrying current cannot be open-circuited.

At the moment S_2 opens, L_r is carrying the current $i_r = I_L + i_{\text{boost}}$. An inductor obeys $V = L_r\, di_r/dt$. If A_2 were turned off simultaneously with S_2, there would be no closed path for i_r to continue flowing — the circuit through L_r would be broken. The inductor cannot let i_r drop to zero instantaneously, so it generates a very large voltage spike across A_2 to try to maintain the current. In practice this spike destroys

the switch. Turning off A_2 while $i_r > 0$ is therefore physically impermissible — A_2 *must* remain on to keep the current path intact.

Reason 2 (physics) — A_2 provides the forcing that centres the oscillation at $V_{dc}/2$.

Once we accept that A_2 stays on (for the reason above), there is a second, equally important consequence. With A_2 on, the DC midpoint ($V_{dc}/2$) is connected to L_r, and the KVL equation around the auxiliary loop contains the forcing term $V_{dc}/2 - v_f$. This is exactly the forced harmonic oscillator derived in Section 2, whose equilibrium is at $v_f = V_{dc}/2$. The circular trajectory in the phase plane is centred at $V_{dc}/2$, which is what allows the swing to reach $v_f = V_{dc}$ on the far side. If A_2 were somehow removed while maintaining a current path (hypothetically), the forcing term would vanish, the oscillation would centre around $v_f = 0$, and v_f would never reach V_{dc}.

With A_2 on, the DC midpoint ($V_{dc}/2$) remains connected to L_r throughout the swing. This shifts the equilibrium of the oscillation to $v_f = V_{dc}/2$ (the forcing point), so the swing is centred at the midpoint of the bus and can reach V_{dc} on the far side. This is precisely the *forced harmonic oscillator* we derived in the green box of Section 2.

The governing equations — already derived in Section 2.

Check the three conditions from the green box against the current circuit:

1. A_2 is **on** — DC midpoint connected to L_r. ✓
2. D_2 has **stopped conducting** — it turned off at the end of state (b). ✓
3. Both $C_r/2$ caps are **free** — S_2 opened at the start of state (d). ✓

All three conditions are satisfied simultaneously for the first time. The governing equations (1)–(2) therefore apply exactly here:

$$\frac{dv_f}{dt} = \frac{i_r - I_L}{C_r}, \qquad \frac{di_r}{dt} = \frac{V_{dc}/2 - v_f}{L_r}$$

Combining these (as shown in the green box) gives the forced harmonic oscillator:

$$\ddot{v_f} + \omega_r^2 v_f = \omega_r^2 \frac{V_{dc}}{2}, \qquad \omega_r = \frac{1}{\sqrt{L_r C_r}}, \quad Z_r = \sqrt{\frac{L_r}{C_r}}$$

The solution — a circular arc in the phase plane.

As derived in the green box, the trajectory in the $(v_f,\ jZ_r)$ phase plane is a **circle** centred at $(V_{dc}/2,\ 0)$ with radius:

$$R = \sqrt{\left(\frac{V_{dc}}{2}\right)^2 + (i_{\text{boost}}\, Z_r)^2}$$

The trajectory starts at $(v_f = 0,\ jZ_r = i_{\text{boost}} Z_r)$ and travels counter-clockwise until it reaches $v_f = V_{dc}$ on the right side of the circle. Figure 2 shows this arc for three values of i_{boost}.

Why i_r peaks at $v_f = V_{dc}/2$.

From the KCL equation $dv_f/dt = (i_r - I_L)/C_r$: v_f is rising fastest when $i_r - I_L$ is largest, i.e. when i_r is at its peak. In the phase plane, i_r is maximum when the

trajectory passes through the topmost point of the circle, which occurs at $v_f = V_{dc}/2$ (the centre of the circle lies directly below this point). After the peak, i_r decreases while v_f continues to rise towards V_{dc}.

What ends this state.

State (d) ends when D_1 clamps v_f at V_{dc}. Here is the precise sequence. The resonant arc carries enough energy to push v_f *above* V_{dc}: the phase-plane circle has radius $R = \sqrt{(V_{dc}/2)^2 + (i_{\text{boost}} Z_r)^2} > V_{dc}/2$, so its rightmost extent $V_{dc}/2 + R$ lies above V_{dc} whenever $i_{\text{boost}} > 0$. Throughout the swing D_1 is *reverse*-biased — its anode (pole node, v_f) is below its cathode (positive DC rail, V_{dc}) — so it stays off. At $v_f = V_{dc}$ the bias reaches exactly zero. But i_r still exceeds I_L at this moment, so the circuit tries to push v_f higher still. The instant the pole node rises fractionally above V_{dc}, D_1 becomes forward-biased, conducts, and shunts the excess current $(i_r - I_L)$ into the positive DC bus. The bus is held rigid at V_{dc} by the bulk DC capacitor — no matter how much current flows in, the voltage barely moves. v_f is therefore pinned: D_1 clamps $v_f = V_{dc}$, the resonant swing stops, and the circuit enters state (e).

State (e) — D_1 clamps: ZVS window opens for S_1

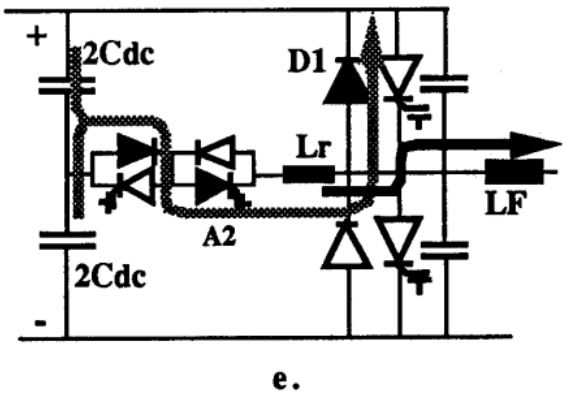

Figure 7: P1 Fig. 7(e) — D_1 clamps $v_f = V_{dc}$. A_2 still on; D_1 conducts the excess current $i_r - I_L$ to the positive rail. S_1 sees zero volts and is ready to be fired at ZVS. Source: De Doncker & Lyons, IEEE IAS 1990, p. 5.

Top panel (waveform) — what you see in the state (e) strip.

We are now in the *S1/A2* strip of the waveform in Figure 3.

- v_f is flat at V_{dc} — clamped by D_1.
- i_r is *ramping downward* from its peak value I_{peak} at a constant slope. The ramp is linear, mirroring the boost ramp of state (b) but in the opposite direction.

Bottom panel (circuit snapshot) — D_1 and A_2 both conducting.

Two devices are bold in Figure 7: D_1 and A_2.

- A_2 is still on — for the same mandatory reason as in state (d): L_r is carrying $i_r > 0$ and must not be open-circuited.
- D_1 is now conducting, but it did *not* become forward-biased at the instant $v_f = V_{dc}$. Throughout state (d), D_1 was *reverse*-biased (anode $= v_f <$ cathode

$= V_{dc}$). At $v_f = V_{dc}$ the bias reached zero — D_1 was on the verge. Because $i_r > I_L$ at that moment, the circuit tried to push v_f *above* V_{dc}, making the anode (pole node) fractionally higher than the cathode (positive rail) — that tiny excess instantly forward-biased D_1. D_1 then shunts the surplus current $(i_r - I_L)$ directly into the rigid V_{dc} bus, preventing v_f from rising further. Result: v_f is clamped at V_{dc}.

What D_1 clamping does to the current paths.

Before D_1 clamped (state d), the excess current $i_r - I_L$ was flowing into the snubber capacitors, charging them and driving v_f upward. The moment D_1 conducts, it provides a *lower-impedance* path from the pole node directly to the positive DC rail. The capacitors are now fully charged ($C_r/2$ across S_2 is at V_{dc}; $C_r/2$ across S_1 is at 0 V) and cannot change further because D_1 pins v_f.

The current balance at the pole node is now:

$$i_r = I_L + i_{D_1}, \qquad i_{D_1} = i_r - I_L \tag{16}$$

D_1 carries the excess $i_r - I_L$ to the positive rail.

Why i_r ramps down linearly.

With A_2 on and $v_f = V_{dc}$ (held by D_1), the KVL around the auxiliary loop gives:

$$L_r \frac{di_r}{dt} = \frac{V_{dc}}{2} - v_f = \frac{V_{dc}}{2} - V_{dc} = -\frac{V_{dc}}{2} \quad \Longrightarrow \quad \frac{di_r}{dt} = -\frac{V_{dc}}{2L_r} \tag{17}$$

The right-hand side is a negative constant — the same magnitude as the boost ramp of state (b) but with opposite sign. i_r therefore decreases at a *constant rate*, tracing a straight line downward on the waveform.

The ZVS window — why S_1 can now be fired for free.

The voltage across S_1 is $V_{dc} - v_f$. With D_1 clamping $v_f = V_{dc}$:

$$V_{S_1} = V_{dc} - v_f = V_{dc} - V_{dc} = 0\,\text{V}$$

S_1 sees *exactly zero volts* across it. Firing S_1 now costs zero switching energy: $P_{\text{sw}} = V_{S_1} \times I_{S_1} = 0$. This is the ZVS turn-on the entire commutation sequence was designed to achieve.

The control must fire S_1 while D_1 is still conducting — i.e. before i_r ramps down to I_L. If S_1 is fired too late (after $i_r < I_L$, so $i_{D_1} = 0$ and D_1 turns off), v_f would leave V_{dc} and the ZVS window would be lost.

What ends this state.

The control fires S_1 at zero voltage — ZVS turn-on, lossless. However, D_1 does *not* turn off at this moment. i_r is still above I_L, so D_1 continues to carry the excess $(i_r - I_L)$ to the positive DC rail, just as it has been doing since the start of state (e). A_2 also remains *gated on* — it is still carrying i_r from the DC midpoint through L_r to the pole node. The transition to state (f) is not triggered by a control action but by a circuit event: when i_r falls to I_L, D_1's current $(i_r - I_L)$ reaches zero and D_1 turns off naturally. At that instant the load current begins to transfer from the D_1 path into S_1's transistor, and the *ramp-down* phase begins.

State (f) — i_r ramps to zero: auxiliary branch winds down

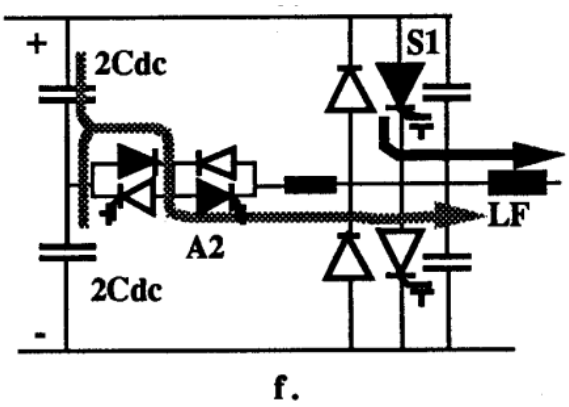

Figure 8: P1 Fig. 7(f) — Ramp-down phase: both S_1 and A_2 gated on; i_r ramps from I_L to zero as the load current transfers into S_1. Source: De Doncker & Lyons, IEEE IAS 1990, p. 5.

State (f) — called the *ramp-down* phase by De Doncker — begins the moment i_r falls below I_L and D_1 turns off naturally. S_1 was already gated on (ZVS) during state (e); now its transistor takes over the load current as i_r continues to decrease. The only remaining task is to *drain the magnetic energy in L_r to zero* while A_2 stays gated on and S_1 makes up the shortfall in load current.

Top panel (waveform) — what you see in the state (f) strip.

We are in the ramp-down strip of the waveform in Figure 3.

- v_f remains flat at V_{dc} — now held *actively* by the closed switch S_1, not passively by the diode D_1.
- i_r is falling in a *straight line* toward zero. The descent is linear, the mirror image of the boost ramp in state (b): same magnitude, opposite sign.
- The slope is exactly $-V_{dc}/(2L_r)$ — derived below.

Bottom panel (circuit snapshot) — S_1 and A_2 both gated on.

Figure 8 shows both S_1 and A_2 in bold — both are *actively gated on.* A_2 is not relying on any body diode; its gate signal has not been removed. De Doncker uses gate-controlled auxiliary devices (the paper mentions MCTs, GTOs, or SCRs for A_2), and the gate is held asserted so that A_2's conducting transistor carries i_r from the DC midpoint through L_r into the pole node.

S_1 is also conducting through its transistor. Unlike state (e) — where $i_r > I_L$ and the excess flowed through D_1 to the positive rail — here $i_r < I_L$. S_1's transistor therefore carries the *deficit* $(I_L - i_r)$ from the positive DC rail to the pole node, making up the shortfall between what the load needs and what L_r provides. KCL at the pole node:

$$\underbrace{i_r}_{\text{from } A_2/L_r} + \underbrace{(I_L - i_r)}_{\text{from } S_1} = I_L \quad \text{(to load)}$$

As i_r decreases toward zero, S_1 picks up more and more of I_L; by the end of state (f) S_1 carries the full load current.

Why the slope is $-V_{dc}/(2L_r)$ — KVL argument.

The auxiliary loop in state (f) is topologically identical to state (e): L_r sits between the DC midpoint ($V_{dc}/2$) and the pole node, with A_2 (still gated on) providing the conduction path. The only change is that $v_f = V_{dc}$ is now enforced by a closed switch S_1 rather than a diode D_1. The KVL result is unchanged:

$$L_r \frac{di_r}{dt} = \underbrace{\frac{V_{dc}}{2}}_{\text{DC midpoint}} - \underbrace{V_{dc}}_{v_f \text{ (held by } S_1)} = -\frac{V_{dc}}{2} \implies \frac{di_r}{dt} = -\frac{V_{dc}}{2L_r} \tag{18}$$

The slope magnitude equals the boost ramp of state (b). The auxiliary inductor charges and discharges at the same rate: the commutation is *symmetric* about the resonant swing.

What ends this state.

i_r ramps to zero. De Doncker states explicitly in the paper:

> *"A2 will be gated off in anticipation of the current zero in order to minimise reverse recovery losses."*

In other words, the controller removes A_2's gate signal just *before* i_r reaches zero rather than at the exact instant of zero. This ensures the residual current at A_2's turn-off is negligible — a near-ZCS (zero-current switching) event: negligible current, negligible reverse recovery charge, negligible switching loss. L_r is now fully demagnetised; the auxiliary branch is electrically invisible; S_1 carries the full I_L. The circuit enters state (g).

State (g) — S_1 steady: commutation complete

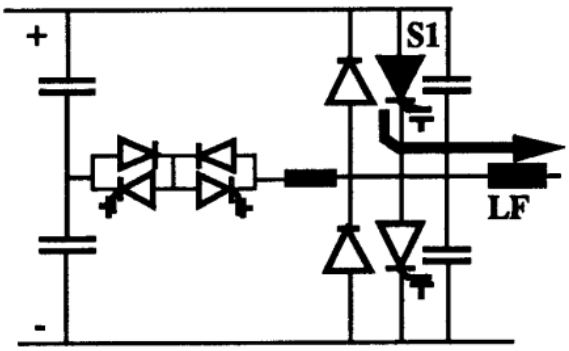

g.

Figure 9: P1 Fig. 7(g) — Steady upper conduction: S_1 carries I_L, $i_r = 0$, auxiliary branch off. Source: De Doncker & Lyons, IEEE IAS 1990, p. 5.

State (g) is the end of the commutation sequence. The circuit has returned to a simple, quiet steady state — but on the *opposite* rail from where it started. State (a) had D_2 clamping the pole node to the *lower* rail with $i_r = 0$. State (g) has S_1 holding the pole node to the *upper* rail with $i_r = 0$. The ARCP has achieved what a hard-switched inverter would have done with a brutal voltage-step turn-on of S_1 — but entirely without switching loss.

Top panel (waveform) — what you see in the state (g) strip.

We are in the final strip of the waveform in Figure 3.

- v_f is flat at V_{dc} — unchanged from states (e) and (f).
- $i_r = 0$. The auxiliary inductor carries no current. Both waveforms are completely settled; there is nothing dynamic happening.

Bottom panel (circuit snapshot) — only S_1 conducting.

Compare Figure 9 with Figure 3. They are mirror images of each other: state (a) had only D_2 bold; state (g) has only S_1 bold. Everything else — A_2, L_r, D_1, D_2, S_2 — is off and carries no current. A_2 was gated off just before i_r reached zero (state f) and is now fully open. L_r is demagnetised: $\frac{1}{2}L_r i_r^2 = 0$. S_1 carries the full load current I_L from the positive DC rail to the pole node and on to the load. The snubber capacitors are at their settled values: $C_r/2$ across S_2 is fully charged to V_{dc}, and $C_r/2$ across S_1 is fully discharged to 0 V — exactly the starting conditions for a future downward commutation ($S_1 \to D_2$).

What ends this state.

Nothing ends it from within the circuit. State (g) persists until the *outer* PWM control loop decides it is time to switch the pole node back to the lower rail — at which point the downward commutation sequence (Figure 10, paper Fig. 8) begins, using A_1 (the upper auxiliary switch) in the mirror-image role that A_2 played here.

State-by-State Circuit Description — P1 Fig. 7a–g

State	Active devices	Pole voltage v_f	Inductor current i_r
(a)	D_2	$v_f = 0$ (clamped to lower rail)	$i_r = 0$; aux. branch idle
(b)	A_2 ON, D_2	$v_f = 0$ (clamped by D_2)	i_r ramps: $\dot{i}_r = +V_{dc}/(2L_r)$
(c)	A_2 ON, S_2 ON	$v_f = 0$ (clamped by S_2)	i_r ramps to $I_L + i_{\text{boost}}$; S_2 gated off near ZCS
(d)	A_2 ON, L_r–C_r	v_f swings $0 \to V_{dc}$ (sine)	i_r follows LC circular arc; peaks at I_{peak}
(e)	A_2 ON, D_1, S_1(ZVS)	$v_f = V_{dc}$ (clamped by D_1)	i_r ramps down; D_1 carries $(i_r - I_L)$; ends at $i_r = I_L$
(f)	A_2 ON, S_1 ON	$v_f = V_{dc}$ (held by S_1)	i_r ramps: $\dot{i}_r = -V_{dc}/(2L_r)$; S_1 carries $(I_L - i_r)$
(g)	S_1 ON	$v_f = V_{dc}$ (steady)	$i_r = 0$; A_2 gated off; aux. branch idle

State Variables & Parameters

Symbol	Meaning	Value at key instants
v_f	Pole-node voltage	0 (states a–c) $\to V_{dc}$ (states e–g)
i_r	Auxiliary current	$0 \to I_{\text{peak}} \to 0$
i_{boost}	Boost increment	Control parameter; set by outer loop
I_{peak}	Peak auxiliary current	Occurs at end of state (d)
T_{boost}	Boost phase duration	States (b)–(c)
T_{res}	Resonant swing duration	State (d) only

Governing Equations

State (b) — linear boost ramp:

$$i_r(t) = \frac{V_{dc}}{2L_r}\,t, \qquad T_{\text{boost}} = \frac{2L_r\, i_{\text{boost}}}{V_{dc}} \tag{19}$$

State (d) — resonant swing (forced LC oscillator):

$$\ddot{v_f} + \omega_r^2\, v_f = \omega_r^2 \cdot \frac{V_{dc}}{2}, \qquad \omega_r = \frac{1}{\sqrt{L_r C_r}}, \quad Z_r = \sqrt{\frac{L_r}{C_r}} \tag{20}$$

Solution with initial conditions $v_f(0) = 0$, $i_r(0) = I_L + i_{\text{boost}}$:

$$v_f(t) = \frac{V_{dc}}{2}(1 - \cos\omega_r t) + (i_r(0) - I_L)\, Z_r \sin\omega_r t \tag{21}$$

$$i_r(t) = I_L + (i_r(0) - I_L)\cos\omega_r t + \frac{V_{dc}/2}{Z_r}\sin\omega_r t \tag{22}$$

Peak current (at end of state d, when $v_f = V_{dc}$):

$$I_{\text{peak}} = I_L + i_{\text{boost}} + \frac{V_{dc}}{2Z_r} \tag{23}$$

Resonant half-swing duration (state d):

$$T_{\text{res}} = \frac{\pi}{\omega_r} = \pi\sqrt{L_r C_r} \tag{24}$$

Total commutation time (states b through f):

$$T_c = T_{\text{boost}} + T_{\text{res}} = \frac{2L_r\, i_{\text{boost}}}{V_{dc}} + \pi\sqrt{L_r C_r} \tag{25}$$

Physical Interpretation

Why seven states? Each state has a distinct set of conducting devices, so the governing equation changes at each transition.
States (a)–(c) are purely inductive: v_f is pinned to 0 by D_2, so the full $V_{dc}/2$ appears across L_r and drives a linear current ramp. This is energy storage, not

switching.
State (d) is the only state where the LC oscillator is active. The circular trajectory in the $(v_f,\, i_r - I_L)$ phase plane must reach $v_f = V_{dc}$ for ZVS. Circle radius: $R = \sqrt{i_{\text{boost}}^2 + (V_{dc}/2Z_r)^2}$. ZVS is satisfied when $i_{\text{boost}} \geq 0$.
State (f) recovers residual energy from L_r back into the DC bus through D_1 — this is why the auxiliary circuit is lossless in the ideal case.
State (g) is the new idle state. The sequence (a)→(g) is the complete low-to-high ($D_2 \to S_1$) transition using A_2; the symmetric high-to-low ($S_1 \to D_2$) transition uses A_1 instead and is covered next in Figure 10.

4. Commutation from Switch — Low Current (P1 Fig. 8)

Big picture

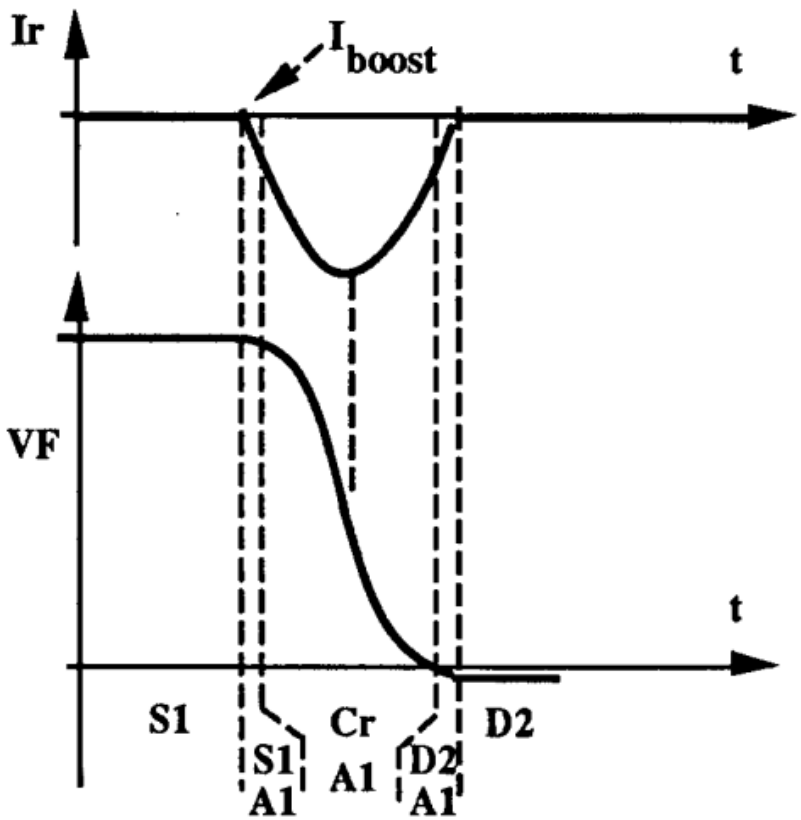

Figure 10: P1 Fig. 8 — Full commutation waveform for the downward transition ($S_1 \to D_2$, low load current). Top trace: auxiliary inductor current $i_r(t)$, which dips negative during the boost and resonant phases. Bottom trace: pole-node voltage $v_f(t)$, which falls smoothly from V_{dc} to 0. Five dashed vertical lines divide the waveform into strips labelled *S1*, *S1/A1*, *Cr/A1*, *D2/A1*, and *D2*, corresponding to states (b)–(f) in this document. Source: De Doncker & Lyons, IEEE IAS 1990, p. 5.

Figure 3 (paper Fig. 7) showed the ARCP pole leg commutating *upward* — from the lower freewheeling diode D_2 (pole node at $v_f = 0$) to the upper main switch S_1 (pole

node at $v_f = V_{dc}$), using A_2 as the auxiliary switch.

Figure 10 (paper Fig. 8) is the *mirror-image* commutation: the pole leg switching *downward* — from the upper main switch S_1 (conducting at $v_f = V_{dc}$) to the lower freewheeling diode D_2 (at $v_f = 0$), using A_1 (the upper auxiliary switch).

Step 1 — start with a capacitor.

Before worrying about auxiliary switches and resonance, recall one fundamental fact about capacitors:

$$\frac{dv_f}{dt} = \frac{i_{\text{pole}}}{C_r} \tag{26}$$

The pole-node voltage v_f can only change if current flows in or out of the snubber capacitor C_r. No current flowing $\Rightarrow$ v_f stays frozen. More current $\Rightarrow$ v_f changes faster. This single equation is the key to everything that follows.

Step 2 — what has to happen during a downward commutation?

Before commutation: S_1 is on, $v_f = V_{dc}$. After commutation: D_2 (or S_2) must conduct, $v_f = 0$. The snubber capacitor C_r at the pole node is currently charged to V_{dc}. For ZVS, C_r must be *fully discharged to* 0 *V before* S_2 *is gated on.* If S_2 is gated on while $v_f > 0$, the capacitor discharges instantaneously through S_2 — that is hard-switching, with all the energy loss we are trying to avoid.

So the question reduces to: *what discharges* C_r*?*

Step 3 — imagine L_r is absent: only I_L discharges C_r.

We temporarily remove the auxiliary circuit to understand the problem first. The full picture with L_r *comes in Steps 5 and 6.*

Once S_1 is gated off it becomes an open circuit. The load filter inductor L_F forces its current I_L to keep flowing regardless — that is what inductors do. I_L flows *out of* the pole node toward the load:

$$\text{pole node} \xrightarrow{I_L} L_F \longrightarrow \text{load}$$

"But if current flows out of the pole node, can't D_2 *immediately supply it from below?"*

No — D_2 is reverse-biased the entire time $v_f > 0$. Check the bias at the moment S_1 opens:

- D_2 anode = 0 V (negative DC rail — fixed)
- D_2 cathode = $v_f = V_{dc}$ (just released by S_1)

D_2 has the full bus voltage across it in the reverse direction. It turns on only at the very end, when v_f has fallen to (near) 0 V and forward-biases D_2. Until then, the snubber capacitor C_r is the only thing supplying I_L. C_r discharges, losing charge, and v_f falls.

"Then why does v_f *look like a sinusoid in the waveform? Shouldn't it be a straight ramp?"*

Exactly right — **without L_r, the discharge would be a straight ramp.** With only C_r and constant I_L, equation (26) gives:

$$\frac{dv_f}{dt} = -\frac{I_L}{C_r} = \text{constant} \qquad \Rightarrow \qquad v_f(t) = V_{dc} - \frac{I_L}{C_r}\,t \quad \text{(straight line)}$$

The sinusoidal shape you see in Figure 10 is produced by L_r — we will come to that in Step 5. For now, use the simpler straight-ramp model to derive the threshold.

Step 4 — how long does the straight-ramp discharge take?

Starting from $v_f = V_{dc}$ and falling at constant slope I_L/C_r, the time to reach $v_f = 0$ is:

$$T_{\text{swing}} = \frac{V_{dc}\,C_r}{I_L} \tag{27}$$

The smaller I_L is, the longer this takes.

Step 5 — the control has a time budget: this gives us I_{th}.

The control cannot wait forever. The switching period and deadtime set a maximum window $T_{\max}$ within which v_f must reach zero. For ZVS we need $T_{\text{swing}} \le T_{\max}$, which gives:

$$I_L \;\ge\; \underbrace{\frac{V_{dc}\,C_r}{T_{\max}}}_{I_{\text{th}}} \tag{28}$$

I_{th} is the **natural commutation threshold**. It depends only on the circuit (V_{dc}, C_r) and the control ($T_{\max}$), not on the load.

Step 6 — what goes wrong when $I_L < I_{\text{th}}$?

When the load current is small:

- v_f falls slowly — equation (27).
- Before v_f reaches zero, the control's deadtime expires.
- The control must gate S_2 on, even though $v_f > 0$.
- S_2 turns on with voltage across it — hard switching. The energy $\frac{1}{2}C_r v_f^2$ dissipates instantly inside S_2.

This is exactly the loss the ARCP topology was designed to eliminate.

Step 7 — the fix: bring L_r back into the picture.

Now we restore the auxiliary circuit and see what L_r actually does. L_r changes the problem in *two* ways simultaneously.

What L_r does (1): adds a second discharge current.

Before S_1 is gated off, A_1 is fired. With S_1 still *on* and $v_f = V_{dc}$, the full half-bus voltage $V_{dc}/2$ appears across L_r (pole node at V_{dc}, DC midpoint at $V_{dc}/2$). L_r is an inductor — it responds by ramping up a current i_r *linearly*:

$$\frac{di_r}{dt} = \frac{V_{dc}}{2L_r} \qquad \text{(during state (b), S1 still on)}$$

This is the **boost phase** — L_r is pre-charged like a spring being wound up, but C_r does not discharge yet because S_1 is still holding $v_f = V_{dc}$.

When S_1 is then gated off, the pole node is freed and i_r is already flowing *out* of it:

$$\text{pole node} \xrightarrow{i_r} L_r \rightarrow A_1 \longrightarrow \text{DC midpoint}$$

Now both I_L *and* i_r drain the pole node, and C_r discharges faster than I_L alone ever could.

What L_r does (2): converts the straight ramp into a sinusoid.

Once S_1 opens, L_r and C_r are in a *coupled loop*. As C_r discharges and v_f falls, the voltage across L_r changes, which changes i_r, which changes how fast C_r discharges, which changes v_f again — a continuous feedback:

$$\begin{array}{ccccc} v_f\downarrow & \Rightarrow & \text{voltage across } L_r\uparrow & \Rightarrow & |i_r|\uparrow \\ & & \Uparrow & & \Downarrow \\ & & C_r \text{ discharges faster} & \Leftarrow & \text{more current out of pole} \end{array}$$

This self-reinforcing loop is precisely an LC oscillator. The governing ODE is:

$$\ddot{v_f} + \omega_r^2\, v_f = \omega_r^2\, \frac{V_{dc}}{2}, \qquad \omega_r = \frac{1}{\sqrt{L_r C_r}} \tag{29}$$

whose solution is a **sinusoid centred at** $V_{dc}/2$ — exactly the smooth S-curve seen in Figure 10. Without L_r, equation (26) gives only a straight ramp; L_r is what bends that ramp into the sinusoidal arc.

The complete two-stage picture.

State	S1 status	What L_r is doing	What C_r is doing
(b) boost	**ON** — holds $v_f = V_{dc}$	i_r ramps linearly ($\dot{i}_r = V_{dc}/2L_r$)	Not discharging — v_f frozen
(c) swing	**OFF** — pole node freed	i_r and C_r locked in LC resonance	Discharging sinusoidally; $v_f : V_{dc} \rightarrow 0$

"Pre-loading L_r with boost energy" means completing stage (b) *before* S_1 is gated off, so that i_r is already at its target value the instant the LC resonance begins. The initial value of i_r sets the radius of the sinusoidal arc; a larger i_r at the start of stage (c) guarantees a wide enough arc to carry v_f all the way from V_{dc} down to 0.

Three structural differences from Figure 3 (paper Fig. 7).

1. **Starting device is a switch, not a diode.** In Figure 3, D_2 was conducting passively — no gate signal, just forward-biased by the load current, and it turned off *naturally* when i_r displaced its current. Here, S_1 is actively gated on and must be *forced* off by the control at the right moment.

2. **Direction reversed: v_f falls from V_{dc} to 0.** In Figure 3, v_f rose from 0 to V_{dc} and D_1 clamped the pole to the positive rail. Here, v_f falls from V_{dc} to 0 and D_2 clamps the pole to the negative rail.

3. **Auxiliary current i_r flows in the opposite direction.** In Figure 3, i_r went positive: DC midpoint $\rightarrow A_2 \rightarrow L_r \rightarrow$ pole node, building energy to push v_f upward. Here, i_r goes negative: pole node $\rightarrow L_r \rightarrow A_1 \rightarrow$ DC midpoint, building energy to pull v_f downward. On the waveform of Figure 10, this appears as a downward dip in i_r rather than an upward peak.

What De Doncker means by "no ramp phases" — a shorter sequence.

De Doncker states that this sequence *"is similar to that described above except there are no ramp phases."* This statement needs careful reading — i_r *does* still ramp in state (b) of this sequence (the *S1/A1* boost strip). What De Doncker means is that the *two-stage, device-handoff ramp structure* of Figure 3 disappears.

In Figure 3 (upward commutation from diode D_2), two separate pre-resonant ramp stages were forced on the circuit:

- **State (b):** i_r ramps from 0 to I_L — required to displace D_2's current to zero so D_2 could turn off *naturally*. A diode has no gate; it cannot simply be commanded off.
- **State (c):** S_2 takes over from D_2; i_r ramps further from I_L to $I_L + i_{\text{boost}}$ — the additional boost needed above I_L.

Both stages existed purely because of the passive nature of D_2.

Here, the starting device S_1 is a *gated switch* — it can be turned off at any instant the control chooses. No device-handoff ramp is needed. L_r is pre-charged during a single boost stage (state (b), S_1 still on), and then S_1 is simply gated off. The two-stage pre-resonant structure collapses into one stage, reducing the total sequence from **seven states to five**:

	paper Fig. 7 (Figure 3) — from diode	**paper Fig. 8 (Figure 1**
Pre-resonant ramp stages	Two (states b + c)	One (state b only)
Why two were needed	D_2 must be naturally commutated	Not applicable — S_1 is ga
Total states	7	5

Note on state labels: the paper numbers these states (b)–(f) because the paper's state (a) is the full waveform panel, which in this document is placed separately as Figure 10. In this document we re-label them (a)–(e) so that, as in Fig. 7, state (a) is always the initial resting state.

Reading the waveform strips in Figure 10.

Figure 10 has two time-domain panels:

- **Top (i_r vs. t):** starts at zero (auxiliary idle), dips downward (negative auxiliary current during boost and resonant phases), then returns to zero. The label I_{boost} marks the peak depth of the dip.
- **Bottom (v_f vs. t):** starts flat at V_{dc}, then traces a smooth S-curve downward to 0, and flattens there.

Five dashed vertical lines divide the waveform into strips:

Strip	What is happening
S1	Idle: S_1 on, $i_r = 0$, $v_f = V_{dc}$
S1/A1	Boost: A_1 fires, i_r ramps negative, S_1 still on
Cr/A1	Resonant swing: S_1 off, v_f falls $V_{dc} \to 0$, A_1 on
D2/A1	Clamp + ramp-down: D_2 clamps, A_1 on, $i_r \to 0$
D2	Steady: D_2 on, $i_r = 0$, $v_f = 0$

States (a)–(e) in this document correspond one-to-one with these five strips. We now walk through each state using the same Feynman approach as Figure 3 (paper Fig. 7).

State (a) — S_1 conducting: the resting state before downward commutation

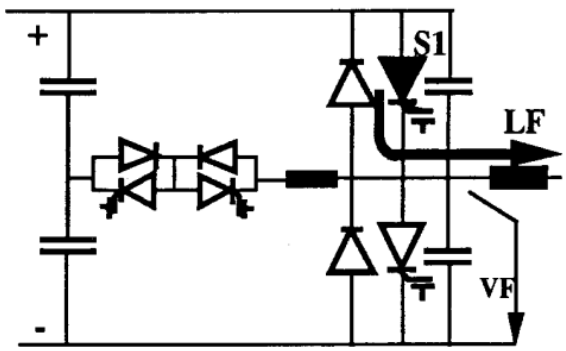

a.

Figure 11: P1 Fig. 8(b) [our state (a)] — S_1 conducting: initial resting state. $v_f = V_{dc}$, $i_r = 0$. Top panel: full commutation waveform (Figure 10, paper Fig. 8) with the *S1* strip highlighted. Bottom panel: circuit snapshot showing S_1 as the only active path. Source: De Doncker & Lyons, IEEE IAS 1990, p. 5.

Top panel (waveform) — what you see in the state (a) strip.

State (a) occupies the leftmost strip of the waveform in Figure 10, labelled *S1*. Both traces are completely flat throughout this strip:

- $i_r = 0\,\mathrm{A}$ — no current flows in the resonant branch. The auxiliary inductor L_r is at rest; the auxiliary back-to-back switches A_1 and A_2 are both open.
- $v_f = V_{dc}\,\mathrm{V}$ — the pole node is pinned to the *positive* DC rail.

This strip has no fixed duration. It lasts as long as the PWM upper-side conduction period lasts. What matters is the pair of numbers it establishes before commutation begins:

$$v_f(0^-) = V_{dc}, \qquad i_r(0^-) = 0\,\mathrm{A} \tag{30}$$

These are the initial conditions for every subsequent calculation in states (b) through (e).

Bottom panel (circuit snapshot) — what is conducting and why.

Only S_1 appears with a bold current path; all other devices are open. S_1 is actively

gated on. The load current I_L flows along the path:

$$\text{positive DC rail} \longrightarrow S_1 \longrightarrow \text{pole node} \longrightarrow L_F \longrightarrow \text{load}$$

The two snubber capacitors sit at fixed voltages: the one across S_1 is *discharged* to 0 V (short-circuited by the conducting S_1); the one across S_2 is *charged* to V_{dc} (the full bus voltage sits across the open S_2). The lower main switch S_2, the freewheeling diode D_2, the upper freewheeling diode D_1, and both auxiliary back-to-back switches A_1, A_2 are all open.

Comparison with state (a) of Figure 3 (paper Fig. 7).

State (a) here is the exact mirror image of state (a) in Figure 3:

Quantity	**Figure 3 state (a)**	**Figure 10 state (a)**
Conducting device	D_2 (passive diode)	S_1 (gated switch)
Pole voltage v_f	0 V (lower rail)	V_{dc} (upper rail)
Aux. current i_r	0 A	0 A
Charged capacitor	$C_r/2$ across S_1	$C_r/2$ across S_2
Direction to commute	Upward ($0 \to V_{dc}$)	Downward ($V_{dc} \to 0$)
Auxiliary switch used	A_2 (lower aux.)	A_1 (upper aux.)

Why this state exists — what it does for the system.

State (a) is the *resting state between switching events*, exactly as state (a) was for the upward commutation. Its role is to guarantee that when the downward commutation is triggered, the circuit starts from a fully known, clean condition (equation (30)). Specifically, $i_r = 0$ ensures the auxiliary inductor has no residual energy left over from a previous event. If i_r were non-zero, the resonant swing would start from a different initial point, potentially causing D_2 to clamp too early or too late — both of which break the ZVS condition for S_2.

State (b) — A_1 fires: the boost phase begins

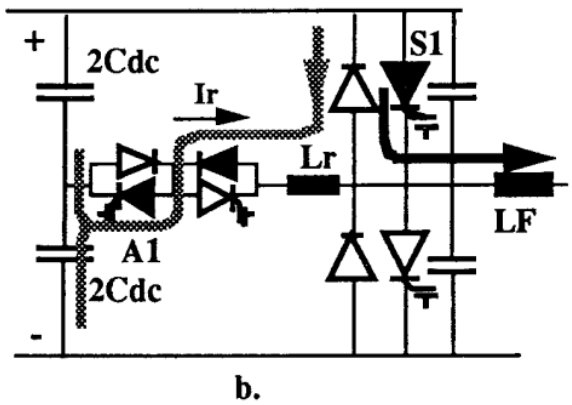

Figure 12: P1 Fig. 8(c) [our state (b)] — A_1 fires: i_r begins ramping negatively from zero. S_1 is still gated on and keeps $v_f = V_{dc}$. Top panel: i_r dips downward linearly in the *S1/A1* strip of Figure 10. Bottom panel: bold paths show A_1 and S_1 both conducting. Source: De Doncker & Lyons, IEEE IAS 1990, p. 5.

What triggers this state.

The control decides it is time to commutate the pole node from $v_f = V_{dc}$ down to $v_f = 0$. It fires A_1 — the upper half of the back-to-back bidirectional auxiliary switch pair on the left of the pole leg (see Figure 12, bottom panel).

Top panel (waveform) — what you see in the state (b) strip.

We are now in the second strip of the waveform in Figure 10, labelled *S1/A1*.

- i_r starts falling from 0 in a straight line — a *linear ramp in the negative direction.* The slope is constant throughout this strip.
- v_f is still completely flat at V_{dc}. S_1 is clamping the pole node to the positive rail, so C_r does *not* discharge during this state.

The downward dip in i_r is the mirror image of the upward ramp seen in state (b) of Figure 3 (paper Fig. 7), where A_2 drove i_r positive.

Bottom panel (circuit snapshot) — two devices conducting at once.

Two current paths are active simultaneously:

1. **The new A_1–L_r path.** A_1 connects the DC bus midpoint (held at $V_{dc}/2$ by the two large $2C_{dc}$ bus capacitors) to one terminal of L_r. The other terminal of L_r connects to the pole node, which is held at V_{dc} by S_1. The voltage across L_r is therefore:

   $$V_{L_r} = V_{dc} - \frac{V_{dc}}{2} = \frac{V_{dc}}{2} \qquad \text{(pole end positive, midpoint end negative)}$$

   Current is driven from the pole node, through L_r, through A_1, into the midpoint — a *downward* (negative) flow.

2. **The continuing S_1–load path.** The load current I_L still flows from the positive rail through S_1 to the pole node and on to the load. But now the auxiliary branch is also drawing current $|i_r|$ out of the pole node. S_1 must supply both:

   $$I_{S_1} = I_L + |i_r|$$

   As $|i_r|$ grows, S_1 carries progressively more current.

Why the ramp is linear — the inductor equation.

An inductor obeys $V_{L_r} = L_r \dfrac{di_r}{dt}$. Because $V_{L_r} = V_{dc}/2$ and is *constant* throughout this state (both S_1 and the bus midpoint hold their ends of L_r at fixed voltages), the ramp rate is constant:

$$\frac{di_r}{dt} = -\frac{V_{dc}}{2L_r} \tag{31}$$

The negative sign reflects the downward direction. Starting from $i_r(0^-) = 0$:

$$i_r(t) = -\frac{V_{dc}}{2L_r}\, t \tag{32}$$

This is a straight line falling at a constant slope — the linear dip visible in the *S1/A1* strip of Figure 10.

Why $V_{dc}/2$ and not V_{dc}?

The auxiliary branch connects to the *DC bus midpoint*, not to the negative rail. Using the midpoint halves the driving voltage and therefore halves the ramp rate, giving the control more time to hit its current target precisely. This is identical reasoning to state (b) of Figure 3 (paper Fig. 7).

Why S_1 must remain on during this state.

This is the critical design choice of the low-current commutation. As shown in Step 7 of the Big Picture, state (b) is the *pre-charge stage*: L_r is wound up with energy while C_r is held frozen at V_{dc} by S_1. If S_1 were opened now, the LC resonance would begin immediately — but with $|i_r|$ still too small, the resonant arc would not be wide enough to carry v_f all the way from V_{dc} down to 0. D_2 would never clamp and ZVS of S_2 would fail. S_1 stays on *exactly long enough* to charge L_r to the required current target before the swing begins.

What ends this state.

State (b) ends when the control determines that $|i_r|$ has reached the target boost level — enough stored energy in L_r to guarantee that the resonant swing in state (c) will carry v_f all the way to 0. At that moment the control gates S_1 *off*. A_1 is *not* turned off here; it stays on. With S_1 open, the pole node is freed and the LC resonance begins — state (c).

State (c) — the resonant LC swing: v_f falls from V_{dc} to 0

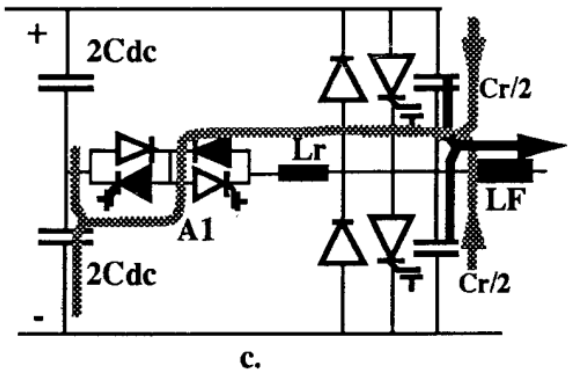

Figure 13: P1 Fig. 8(d) [our state (c)] — Resonant LC swing. v_f falls in an S-curve from V_{dc} to 0; $|i_r|$ peaks then decreases. A_1 remains on; both $C_r/2$ snubbers are active. No main switch or diode conducts. Source: De Doncker & Lyons, IEEE IAS 1990, p. 5.

State (c) is the core of the downward commutation.

Everything in states (a) and (b) was preparation: establishing the resting condition, then charging L_r to the correct boost current. State (c) is where that stored energy is put to work: the resonant swing carries v_f from V_{dc} all the way down to 0, enabling S_2 to be turned on at zero voltage. It is the mirror image of state (d) in Figure 3 (paper Fig. 7), which swung v_f upward from 0 to V_{dc}.

Top panel (waveform) — what you see in the state (c) strip.

We are in the third strip of the waveform in Figure 10, labelled *Cr/A1*.

- v_f falls in a smooth *S-shaped curve* from V_{dc} towards 0. It does not ramp linearly — it follows a sinusoidal shape, slow at first, fastest at the midpoint $V_{dc}/2$, then slowing again as it approaches 0.
- i_r is already negative at the start (from the boost in state (b)). Its magnitude first *increases* (dips deeper) until v_f passes through $V_{dc}/2$, then *decreases* (dip becomes shallower) as v_f approaches 0. The deepest point of the dip — labelled I_{boost} in Figure 10 — occurs at $v_f = V_{dc}/2$.

Bottom panel (circuit snapshot) — only A_1, L_r, and the two $C_r/2$ caps.

Looking at Figure 13: A_1 is the only switch conducting. Both $C_r/2$ snubbers are active — one discharging (across S_1, from V_{dc} towards 0) and one charging (across S_2, from 0 towards V_{dc}). All other devices — S_1, S_2, D_1, D_2 — are open. D_2 is still firmly reverse-biased: its anode is at 0 V and its cathode is at $v_f > 0$.

Why A_1 must stay on during the swing.

The two reasons are identical to those for A_2 in state (d) of Figure 3, applied in mirror image.

Reason 1 (mandatory) — an inductor carrying current cannot be open-circuited.

At the moment S_1 opens, L_r is already carrying the boost current $i_r = -|i_{r,0}|$. If A_1 were turned off simultaneously, the circuit through L_r would be broken. L_r cannot let i_r change instantaneously; it would generate a destructive voltage spike. A_1 must remain on to keep the current path intact.

Reason 2 (physics) — A_1 provides the forcing that centres the oscillation at $V_{dc}/2$.

With A_1 on, the DC midpoint ($V_{dc}/2$) remains connected to L_r throughout the swing. The KVL equation around the auxiliary loop contains the forcing term $V_{dc}/2 - v_f$, which centres the oscillation at $v_f = V_{dc}/2$. This is what allows the trajectory to swing from $v_f = V_{dc}$ all the way across to $v_f = 0$ on the other side. Without the midpoint connection the oscillation would be centred somewhere else and the swing would not reach the correct rail.

The governing equations — same as state (d) of Figure 3.

Check the three conditions for the LC oscillator (same as the green box in Section 2):

1. A_1 is **on** — DC midpoint connected to L_r. ✓
2. S_1 has **just opened** — pole node is free. ✓
3. Both $C_r/2$ caps are **free** — S_1 no longer clamps one end. ✓

All three conditions are satisfied. The governing equations are therefore identical to those of state (d) in Figure 3:

$$\frac{dv_f}{dt} = \frac{i_r - I_L}{C_r}, \qquad \frac{di_r}{dt} = \frac{V_{dc}/2 - v_f}{L_r} \tag{33}$$

Combining these gives the forced harmonic oscillator (equation (29) from the Big Pic-

ture):

$$\ddot{v_f} + \omega_r^2 v_f = \omega_r^2 \frac{V_{dc}}{2}, \qquad \omega_r = \frac{1}{\sqrt{L_r C_r}}, \quad Z_r = \sqrt{\frac{L_r}{C_r}}$$

The solution — a clockwise arc in the phase plane.

Using the shifted variables $u = v_f - V_{dc}/2$ and $j = i_r - I_L$, the trajectory in the $(u,\ jZ_r)$ phase plane is a **circle centred at the origin** with radius:

$$R = \sqrt{\left(\frac{V_{dc}}{2}\right)^2 + (j_0 Z_r)^2}, \qquad j_0 = i_r(0^+) - I_L \tag{34}$$

where $i_r(0^+)$ is the (negative) boost current at the instant S_1 opens. Because $j_0 < 0$ (and $|j_0|$ can be large), the radius $R > V_{dc}/2$.

Comparing with the upward commutation in Figure 3:

Property	**Figure 6 — upward**	**Figure 13 — downward**
Start point $(u,\ jZ_r)$	$(-V_{dc}/2,\ i_{\text{boost}} Z_r)$ — bottom right	$(+V_{dc}/2,\ j_0 Z_r)$ — top right
End point $(u,\ jZ_r)$	$(+V_{dc}/2,\ \cdot)$ — top right	$(-V_{dc}/2,\ \cdot)$ — bottom left
Direction of travel	Counter-clockwise	**Clockwise**
Clamping diode	D_1 (clamps $v_f = V_{dc}$)	D_2 (clamps $v_f = 0$)

Why $|i_r|$ peaks at $v_f = V_{dc}/2$.

From equation (33): v_f is changing fastest when $|i_r - I_L|$ is largest. In the phase plane, $|j| = |i_r - I_L|$ is maximum at the *bottommost point* of the clockwise trajectory, which occurs when $u = 0$, i.e. when $v_f = V_{dc}/2$. Before the midpoint $|i_r|$ grows; after the midpoint $|i_r|$ shrinks. This is the deepest point of the i_r dip in the waveform.

What ends this state.

As v_f falls below $V_{dc}/2$, the magnitude of i_r starts to decrease. The resonant arc carries enough energy for v_f to reach 0 — in fact, it would try to push v_f *below* 0 because the circle radius $R > V_{dc}/2$. Throughout the swing D_2 is reverse-biased (anode at 0 V, cathode at $v_f > 0$). As v_f approaches 0 the reverse bias shrinks. The instant v_f tries to go fractionally below 0 V, D_2 becomes forward-biased, conducts, and clamps v_f at the negative rail. The resonant swing is arrested and the circuit enters state (d).

State (d) — D_2 clamps: ZVS window opens for S_2

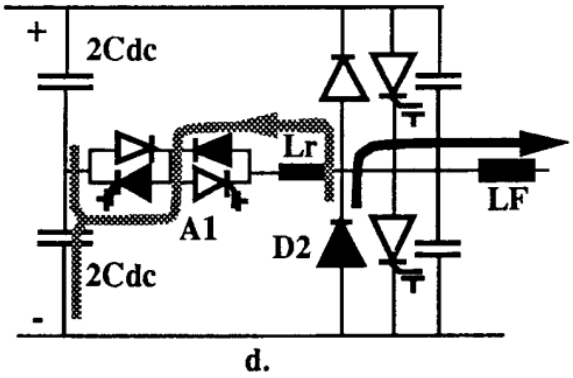

Figure 14: P1 Fig. 8(e) [our state (d)] — D_2 clamps $v_f = 0$. A_1 still on; S_2 gated on at ZVS. i_r ramps linearly from its negative peak back toward zero. Source: De Doncker & Lyons, IEEE IAS 1990, p. 5.

Top panel (waveform) — what you see in the state (d) strip.

We are now in the fourth strip of the waveform in Figure 10, labelled *D2/A1*.

- v_f is flat at 0 V — clamped by D_2.
- i_r is *ramping upward* (toward zero) from its most negative value at a constant slope. The ramp is linear, mirroring the boost ramp of state (b) but in the opposite direction — now the energy stored in L_r is being returned to the DC bus.

Bottom panel (circuit snapshot) — D_2, A_1, and S_2.

Three devices are active in Figure 14:

- D_2 has just forward-biased and is clamping $v_f = 0$. Its anode (0 V rail) is now barely above its cathode (pole node at $\approx 0\,\mathrm{V}$), so it conducts.
- A_1 remains on — L_r is still carrying current and cannot be open-circuited (mandatory, same reason as in state (c)).
- S_2 is gated on at the start of this state while $v_f = 0$ — zero voltage switching.

The ZVS window — why S_2 can be fired for free.

The voltage across S_2 is pole-node voltage minus negative-rail voltage:

$$V_{S_2} = v_f - 0\,\mathrm{V} = 0 - 0 = 0\,\mathrm{V}$$

S_2 sees exactly zero volts across it. Firing S_2 costs zero switching energy: $P_{\mathrm{sw}} = V_{S_2} \times I_{S_2} = 0$. This is the ZVS turn-on the entire commutation sequence was built to achieve.

The window lasts as long as D_2 is conducting — i.e. as long as $i_r < 0$, so that D2 is still supplying current into the pole node. The control must fire S_2 before i_r reaches zero and the ZVS window closes.

Why i_r ramps back linearly.

With A_1 on and $v_f = 0$ (held by D_2 and S_2), the KVL around the auxiliary loop gives:

$$L_r \frac{di_r}{dt} = \frac{V_{dc}}{2} - v_f = \frac{V_{dc}}{2} - 0 = +\frac{V_{dc}}{2} \quad \Longrightarrow \quad \frac{di_r}{dt} = +\frac{V_{dc}}{2L_r} \tag{35}$$

The right-hand side is a positive constant — the same magnitude as the boost ramp of state (b), but now driving i_r *upward* toward zero. i_r therefore increases at a constant rate, recovering from its negative peak back to zero in a straight line on the waveform.

What D_2 clamping does to the current paths.

Before D_2 clamped (state c), the discharge of C_r was driven by both I_L and $|i_r|$ together. Now v_f is pinned at 0 V and both D_2 (or S_2 once fired) must supply all the current that is flowing out of the pole node.

KCL at the pole node:

$$i_{D_2/S_2} = I_L + |i_r| \tag{36}$$

Two outward currents must be fed from the negative rail: the load current I_L to the load, and the auxiliary current $|i_r|$ flowing through L_r toward the midpoint. As $|i_r|$ decreases toward zero, D_2/S_2 carries progressively less until it settles at exactly I_L when $i_r = 0$.

Comparison with state (e) of Figure 3 (paper Fig. 7).

Property	**Figure 7**	**Figure 14**
Clamping diode	D_1 at $v_f = V_{dc}$	D_2 at $v_f = 0$
ZVS device fired	S_1 (upper switch)	S_2 (lower switch)
ZVS condition	$V_{dc} - v_f = 0$	$v_f - 0 = 0$
Auxiliary switch on	A_2	A_1
i_r at start	$> I_L$ (positive peak)	< 0 (negative peak)
i_r ramp direction	Downward ($-V_{dc}/2L_r$)	Upward ($+V_{dc}/2L_r$)
Diode current	$i_{D_1} = i_r - I_L$ (excess above load)	$i_{D_2} = I_L + \lvert i_r \rvert$ (load plus Lr demand)

What ends this state.

i_r ramps linearly toward zero. When $i_r = 0$:

- The auxiliary branch carries no current.
- A_1 is gated off — De Doncker notes it is turned off *"in anticipation of the current zero in order to minimise reverse recovery losses."* (same phrasing as for A_2 in Figure 3, paper Fig. 7.)
- D_2 (if still on) turns off naturally as S_2 now carries the full I_L.

The pole node is now in its new resting condition: S_2 on, $v_f = 0$, $i_r = 0$ — state (e).

State (e) — S_2 steady: commutation complete

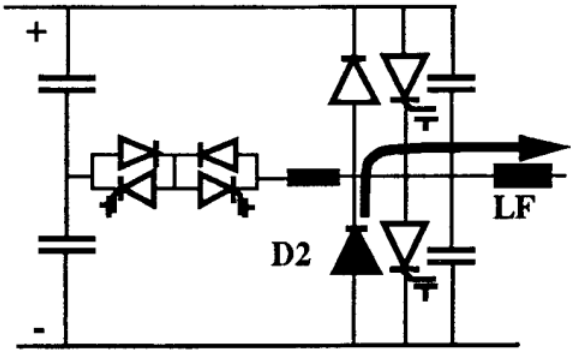

e.

Figure 15: P1 Fig. 8(f) [our state (e)] — Steady lower conduction: S_2 carries I_L, $i_r = 0$, auxiliary branch off. Source: De Doncker & Lyons, IEEE IAS 1990, p. 5.

State (e) is the end of the downward commutation sequence. The circuit has returned to a simple, quiet steady state — but on the *opposite* rail from where it started. State (a) had S_1 holding the pole node to the *upper* rail with $i_r = 0$. State (e) has S_2 holding the pole node to the *lower* rail with $i_r = 0$. The ARCP has achieved what a hard-switched inverter would have done with a brutal voltage-step turn-off of S_1 — but entirely without switching loss.

Top panel (waveform) — what you see in the state (e) strip.

We are in the final strip of the waveform in Figure 10, labelled *D2* (it is labelled for the lower rail conduction; S_2 conducts in the same role).

- v_f is flat at 0 V — held by S_2.
- $i_r = 0$. The auxiliary inductor carries no current; the auxiliary branch is completely idle. Both waveforms are settled; nothing dynamic is happening.

Bottom panel (circuit snapshot) — only S_2 conducting.

Compare Figure 15 with Figure 11 (our state a). They are the *exact mirror images* of each other within Figure 10: state (a) had only S_1 bold; state (e) has only S_2 bold. Everything else — A_1, L_r, D_1, D_2, S_1 — is off and carries no current. A_1 was gated off just before i_r reached zero (state d) and is now fully open. L_r is demagnetised: $\frac{1}{2}L_r i_r^2 = 0$. S_2 carries the full load current I_L from the pole node down to the negative DC rail. The path is:

$$\text{load} \longrightarrow L_F \longrightarrow \text{pole node} \xrightarrow{S_2} 0\,\text{V rail}$$

The snubber capacitors are at their new settled values:

- $C_r/2$ across S_2 — discharged to 0 V (short-circuited by the conducting S_2).
- $C_r/2$ across S_1 — charged to V_{dc} (full bus voltage across the open S_1).

These are exactly the starting conditions for a future *upward* commutation (S_2 or $D_2 \to S_1$) using A_2 — the mirror-image sequence described in Figure 3 (paper Fig. 7).

What ends this state.

Nothing ends it from within the circuit. State (e) persists until the outer PWM control loop decides it is time to switch the pole node back to the upper rail, at which point the upward commutation sequence begins, using A_2 in the mirror-image role that A_1 played here.

State-by-State Circuit Description — P1 Fig. 8(a)–(e)

State	Active devices	Pole voltage v_f	Inductor current i_r
(a)	S_1 ON	$v_f = V_{dc}$ (held by S_1)	$i_r = 0$; aux. branch idle
(b)	A_1 ON, S_1 ON	$v_f = V_{dc}$ (held by S_1)	i_r ramps: $\dot{i}_r = -V_{dc}/(2L_r)$
(c)	A_1 ON, L_r–C_r	v_f swings $V_{dc} \to 0$ (sine)	i_r follows LC clockwise arc; most negative at $v_f = V_{dc}/2$
(d)	A_1 ON, D_2, S_2(ZVS)	$v_f = 0$ (clamped by D_2/S_2)	i_r ramps: $\dot{i}_r = +V_{dc}/(2L_r)$; D_2/S_2 carries $(I_L + \lvert i_r \rvert)$
(e)	S_2 ON	$v_f = 0$ (steady)	$i_r = 0$; A_1 gated off; aux. branch idle

5. Commutation from Switch — High Current (P1 Fig. 9)

Big picture

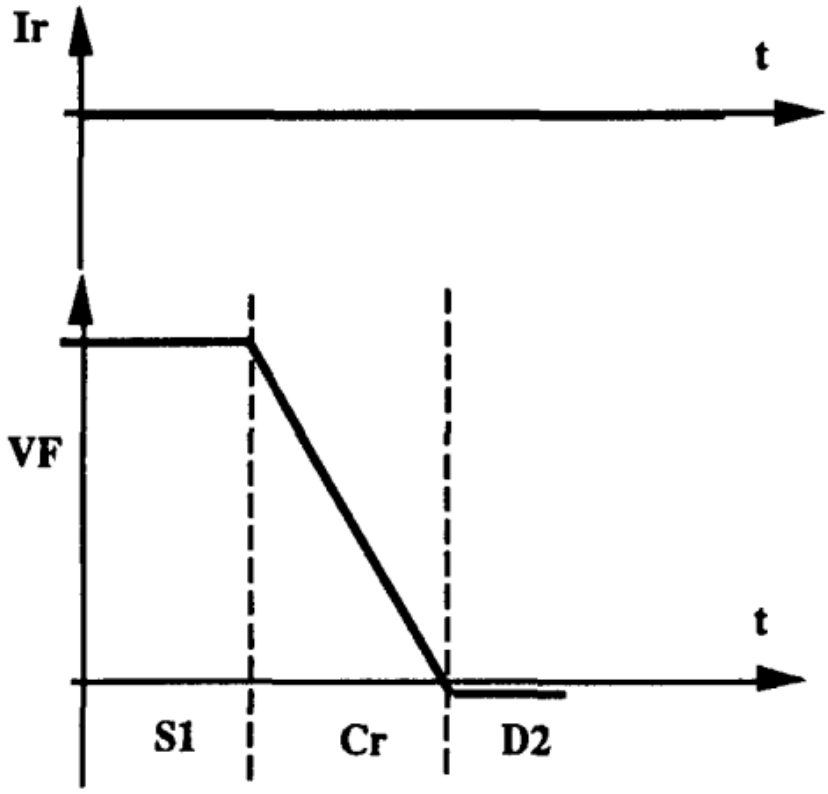

Figure 16: P1 Fig. 9 — Full commutation waveform for the downward transition ($S_1 \to D_2/S_2$, high load current, $I_L \geq I_{th}$). The paper figure shows S_1 conducting in the initial circuit snapshot, confirming this is a downward commutation. Top trace: auxiliary inductor current $i_r(t)$ — stays at zero throughout; the auxiliary circuit is never activated. Bottom trace: pole-node voltage $v_f(t)$ — falls from V_{dc} to 0 driven by the load current alone. Source: De Doncker & Lyons, IEEE IAS 1990, p. 6.

Figure 10 (paper Fig. 8) showed the *low-current* downward commutation ($S_1 \to D_2/S_2$), where $I_L < I_{th}$. The auxiliary boost was essential: A_1 was fired to pre-charge i_r, providing the extra discharge current needed to pull v_f from V_{dc} down to 0 within the deadtime window.

Figure 16 (paper Fig. 9) is the **high-current counterpart** of the same downward commutation. The starting device is again S_1 ($v_f = V_{dc}$), and the destination is again D_2/S_2 ($v_f = 0$). The only difference is that now $I_L \geq I_{th}$, so no auxiliary boost is required.

Step 1 — the threshold I_{th} revisited.

In the Big picture of Figure 10 we derived:

$$I_{th} = \frac{V_{dc}\, C_r}{T_{\max}} \tag{37}$$

This is the minimum I_L for which the snubber capacitor C_r discharges from V_{dc} to 0

within the allowed deadtime $T_{\max}$, using load current alone (no auxiliary):

$$T_{\text{swing}} = \frac{V_{dc}\, C_r}{I_L} \;\leq\; T_{\max} \qquad \text{when } I_L \geq I_{th} \tag{38}$$

When this condition is met, the control skips the boost phase entirely.

Step 2 — the auxiliary circuit sits completely idle.

Because I_L alone is sufficient, the control never fires A_1. i_r stays at zero for the entire commutation. No energy is stored in L_r; no LC oscillation occurs.

With $i_r = 0$, the shifted state $j = i_r - I_L = -I_L$ (constant), and the capacitor equation gives:

$$\frac{dv_f}{dt} = \frac{i_r - I_L}{C_r} = -\frac{I_L}{C_r} = \text{constant} \tag{39}$$

C_r discharges at a constant rate, so v_f falls as a **straight line** from V_{dc} to 0.

Step 3 — why is the waveform a straight line, not a sinusoid?

In Figure 10 (Fig. 8), L_r bent the straight ramp into a sinusoid because it coupled with C_r to form an LC oscillator. Here, $i_r = 0$ throughout, so L_r never enters the loop. C_r simply integrates a constant current I_L:

$$v_f(t) = V_{dc} - \frac{I_L}{C_r}\, t \quad \text{(straight line)}$$

This is exactly the simplified "L_r-absent" model from Step 3 of the Figure 10 Big picture — but now that model is the *actual* circuit behaviour, because the auxiliary branch truly is idle.

Step 4 — ZVS is achieved by the same clamping mechanism.

When v_f reaches 0, diode D_2 forward-biases and clamps the pole node to the negative rail. S_2 is then gated on while D_2 is conducting:

$$V_{S_2} = v_f - 0\,\text{V} = 0 - 0 = 0\,\text{V}$$

S_2 turns on at zero volts — ZVS, with no switching loss. This is the same clamping mechanism as in Figure 10 (Figure 14, Fig. 8 state (d)), but without the prior resonant arc bringing v_f to zero: here I_L alone carries v_f all the way.

Three states at a glance.

State	What is happening	v_f shape
(a)	S_1 on, $i_r = 0$, $v_f = V_{dc}$; idle	Flat at V_{dc}
(b)	S_1 off; I_L alone discharges C_r	Linear ramp: $V_{dc} \to 0$
(c)	D_2 clamps; S_2 ZVS on; $i_r = 0$; steady	Flat at 0

Comparison: Fig. 8 vs. Fig. 9 (same direction, different current regime).

	Figure 10 — from S_1, low $I_L < I_{th}$	**Figure 16 — from S_1, high $I_L \geq I_{th}$**
Auxiliary boost	Required: A_1 fires; i_r dips negative	Not needed: A_1 never fires
No. of states	5 (boost + LC swing + clamp + ramp-up)	3 (idle, natural discharge, steady)
v_f trajectory	Sinusoidal arc (LC resonance)	Straight-line ramp ($-I_L/C_r$)
i_r profile	Dips negative, returns to zero	Zero throughout
ZVS for S_2	D_2 clamped by LC arc reaching 0	D_2 clamped by I_L discharging C_r to 0

State (a) — S_1 conducting: the resting state before downward commutation

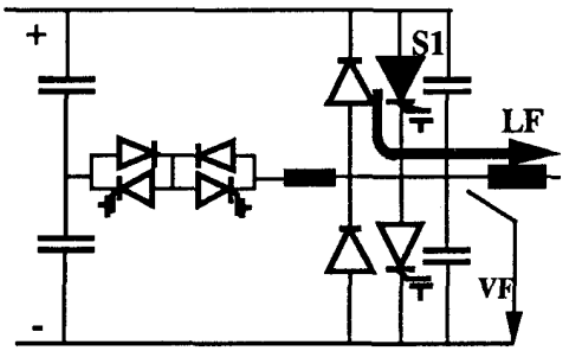

a.

Figure 17: P1 Fig. 9(a) [our state (a)] — S_1 conducting: initial resting state. $v_f = V_{dc}$, $i_r = 0$, $I_L \geq I_{th}$. The paper figure shows S_1 as the only active current path, confirming $v_f = V_{dc}$ and the downward commutation direction. Source: De Doncker & Lyons, IEEE IAS 1990, p. 6.

What the paper figure shows.

The circuit diagram in Figure 17 shows S_1 conducting, with the bold current path running from the positive DC rail through S_1 to the pole node and onward through L_F to the load. All other devices — S_2, D_1, D_2, A_1, A_2 — are open.

This is the idle resting state with the pole node held at the positive rail by the conducting S_1. The initial conditions are:

$$v_f(0^-) = V_{dc}, \qquad i_r(0^-) = 0\,\mathrm{A} \tag{40}$$

This is the same resting state as Figure 11 (Fig. 8 state (a)): S_1 on, $v_f = V_{dc}$, $i_r = 0$. The two sequences diverge only after the commutation trigger arrives, based on the comparison of I_L against I_{th}:

- $I_L < I_{th}$: control fires $A_1 \Rightarrow$ Figure 10 sequence (boost + LC swing).
- $I_L \geq I_{th}$: control gates S_1 off directly $\Rightarrow$ Figure 16 sequence (natural discharge).

Snubber capacitor voltages.

With S_1 conducting and $v_f = V_{dc}$:

- The snubber cap across S_1 is short-circuited by the conducting S_1 — charged to 0 V.
- The snubber cap across S_2 has the full bus voltage across it ($v_f = V_{dc}$, negative rail = 0) — charged to V_{dc}.

These are the same capacitor initial conditions as Figure 11 (Fig. 8 state (a)).

State (b) — natural discharge: I_L alone pulls v_f from V_{dc} to 0

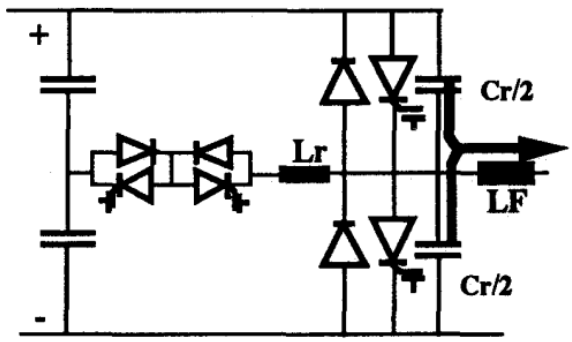

b.

Figure 18: P1 Fig. 9(b) [our state (b)] — natural capacitive discharge. All main switches and diodes are open. The auxiliary branch carries no current ($i_r = 0$, L_r idle). The only active current path is the bold arrow through L_F: load current I_L flowing out of the pole node to the right. Both $C_r/2$ snubbers discharge as v_f falls from V_{dc} toward 0. Source: De Doncker & Lyons, IEEE IAS 1990, p. 6.

What the paper figure shows.

The circuit diagram in Figure 18 contains only one bold current arrow: I_L pointing rightward through L_F out of the pole node. Every switching device — S_1, S_2, D_1, D_2, A_1, A_2 — is shown open. The resonant inductor L_r carries no current. The two $C_r/2$ snubber capacitors are the only elements connected between the pole node and the DC rails.

This tells us three things directly from the figure:

1. $i_r = 0$ — the auxiliary branch is completely idle.
2. I_L is the sole current flowing at the pole node.
3. The snubber capacitors ($C_r/2$ upper and lower) must be supplying I_L, because there is no other source.

Why the snubber caps are the only current source.

The instant S_1 is gated off, the pole node is disconnected from both DC rails. The load filter inductor L_F cannot change I_L abruptly — it forces I_L to keep flowing out of the pole node. With no switch or diode to supply this current from a rail, the two $C_r/2$ snubber capacitors are the only path: they discharge, losing charge, and the pole-node voltage v_f falls.

The governing equation.

With $i_r = 0$, the shifted-state equation simplifies to:

$$\frac{dv_f}{dt} = \frac{i_r - I_L}{C_r} = -\frac{I_L}{C_r} \tag{41}$$

The right-hand side is constant (I_L barely changes over the short commutation window because $L_F \gg L_r$), so v_f falls as a **straight line**:

$$v_f(t) = V_{dc} - \frac{I_L}{C_r}\, t \tag{42}$$

Duration of state (b).

State (b) ends when v_f reaches 0 and D_2 forward-biases. Setting $v_f = 0$ in equation (42):

$$T_{\text{swing}} = \frac{V_{dc}\, C_r}{I_L} \tag{43}$$

For ZVS to be achieved, this must complete before the deadtime window closes: $T_{\text{swing}} \leq T_{\max}$, which is guaranteed by the condition $I_L \geq I_{th} = V_{dc}\, C_r / T_{\max}$.

Comparison with Figure 13 (Fig. 8 state (c)) (the resonant swing).

Both state (b) here and state (c) of Figure 10 are the interval during which v_f falls from V_{dc} to 0. The contrast shows the full effect of the auxiliary circuit:

Quantity	**Figure 13 — LC swing**	**Figure 18 — natural discharge**
i_r during swing	Negative peak, then rises	Zero throughout
Shape of $v_f(t)$	Sinusoidal arc (S-curve)	Straight line
Governing equation	$\ddot{v_f} + \omega_r^2 v_f = \omega_r^2 V_{dc}/2$	$dv_f/dt = -I_L/C_r$
Duration	π/ω_r (half LC period)	$V_{dc}\, C_r / I_L$
What ends it	D_2 clamps when LC arc reaches $v_f = 0$	D_2 clamps when straight ramp reac

The endpoint is the same in both cases — D_2 clamping — but the path taken is fundamentally different: curved vs. straight.

State (c) — D_2 clamps: ZVS window opens for S_2, commutation complete

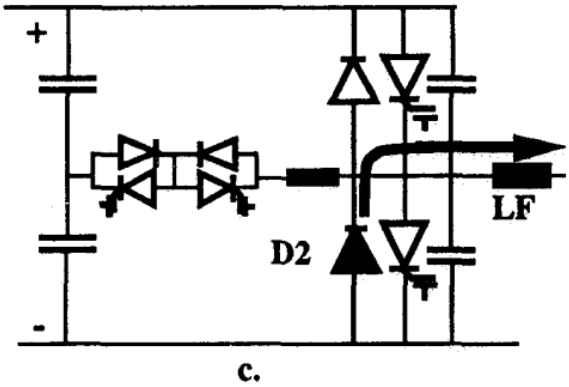

Figure 19: P1 Fig. 9(c) [our state (c)] — D_2 clamping: pole node at 0 V. D_2 is shown bold and labelled; it is the only active current path. Bold arrow: I_L flows from the negative rail through D_2 to the pole node, then rightward through L_F to the load. All other devices open; $i_r = 0$ throughout. Source: De Doncker & Lyons, IEEE IAS 1990, p. 6.

What the paper figure shows.

The circuit diagram in Figure 19 shows D_2 as the only bold, active element, labelled explicitly. The bold current arrow runs from the negative DC rail upward through D_2 to the pole node, then rightward through L_F to the load. Every other device — S_1, S_2, D_1, A_1, A_2 — is open. The resonant inductor L_r carries no current.

Why D_2 turns on.

At the end of state (b), v_f has fallen to 0 V. At that instant D_2's bias condition changes:

- D_2 anode = negative rail = 0 V
- D_2 cathode = pole node = $v_f \to 0$ V

D_2 forward-biases and clamps the pole node to 0 V. I_L now flows from the negative rail through D_2 to the pole node, supplying the load without further discharge of C_r.

The ZVS condition for S_2.

With the pole node clamped at 0 V by D_2, the voltage across S_2 is:

$$V_{S_2} = v_f - 0\,\text{V} = 0 - 0 = 0\,\text{V} \tag{44}$$

S_2 is gated on while D_2 is conducting. It turns on at exactly zero volts — ZVS, with no switching loss.

Why no ramp-down is needed here (contrast with Figure 14, Fig. 8 state (d)).

In Figure 14 (Fig. 8 state (d)), D_2 had clamped while A_1 was still conducting a negative i_r, which had to ramp back to zero before A_1 could be gated off — a separate waveform strip, state (d), existed purely for this ramp-down.

Here $i_r = 0$ throughout the entire sequence. The auxiliary branch never activated. When D_2 clamps, there is no residual i_r to dispose of: the clamp instant is simultaneously the ZVS condition and the final steady state. This collapses what was four active intervals in Figure 10 into just two (states (b) and (c) here).

Final steady-state conditions.

$$v_f = 0\,\mathrm{V}, \qquad i_r = 0\,\mathrm{A} \tag{45}$$

Once S_2 is gated on it takes over from D_2, which becomes reverse-biased. The snubber capacitors reset: the one across S_2 is discharged to 0 V (short-circuited by S_2); the one across S_1 is charged to V_{dc} (full bus voltage across open S_1), ready for the next upward commutation event.

State-by-State Circuit Description — P1 Fig. 9(a)–(c)

St.	Active device(s)	v_f	i_r and key action
(a)	S_1 ON	V_{dc} (held)	$i_r = 0$; idle; $I_L \geq I_{th}$ confirmed
(b)	None — all open	Falls $V_{dc} \to 0$ (straight line)	$i_r = 0$; I_L alone discharges C_r; $dv_f/dt = -I_L/C_r$
(c)	D_2 clamps; S_2 ZVS on	0 (clamped, steady)	$i_r = 0$; $V_{S_2} = 0$; ZVS; commutation complete

6. Master Figure Reference Table

Filename (omit .png)	Pg	Section	Key Equation(s)
P1_Fig5_ARCP_pole_leg	3	2	(1)–(4)
P1_Fig7a_state1_D2_conducting	4	3	—
P1_Fig7b_state2_A1_boost_start	4	3	(19)
P1_Fig7c_state3_boost_complete	4	3	(19)
P1_Fig7d_state4_resonant_swing	4–5	3	(20)–(22)
P1_Fig7e_state5_upper_diode_clamp	5	3	(23)
P1_Fig7f_state6_ir_ramps_down	5	3	(25)
P1_Fig7g_state7_S1_steady	5	3	—

Table 1: Currently available figures (8 PNGs). Add rows as new figures are extracted.