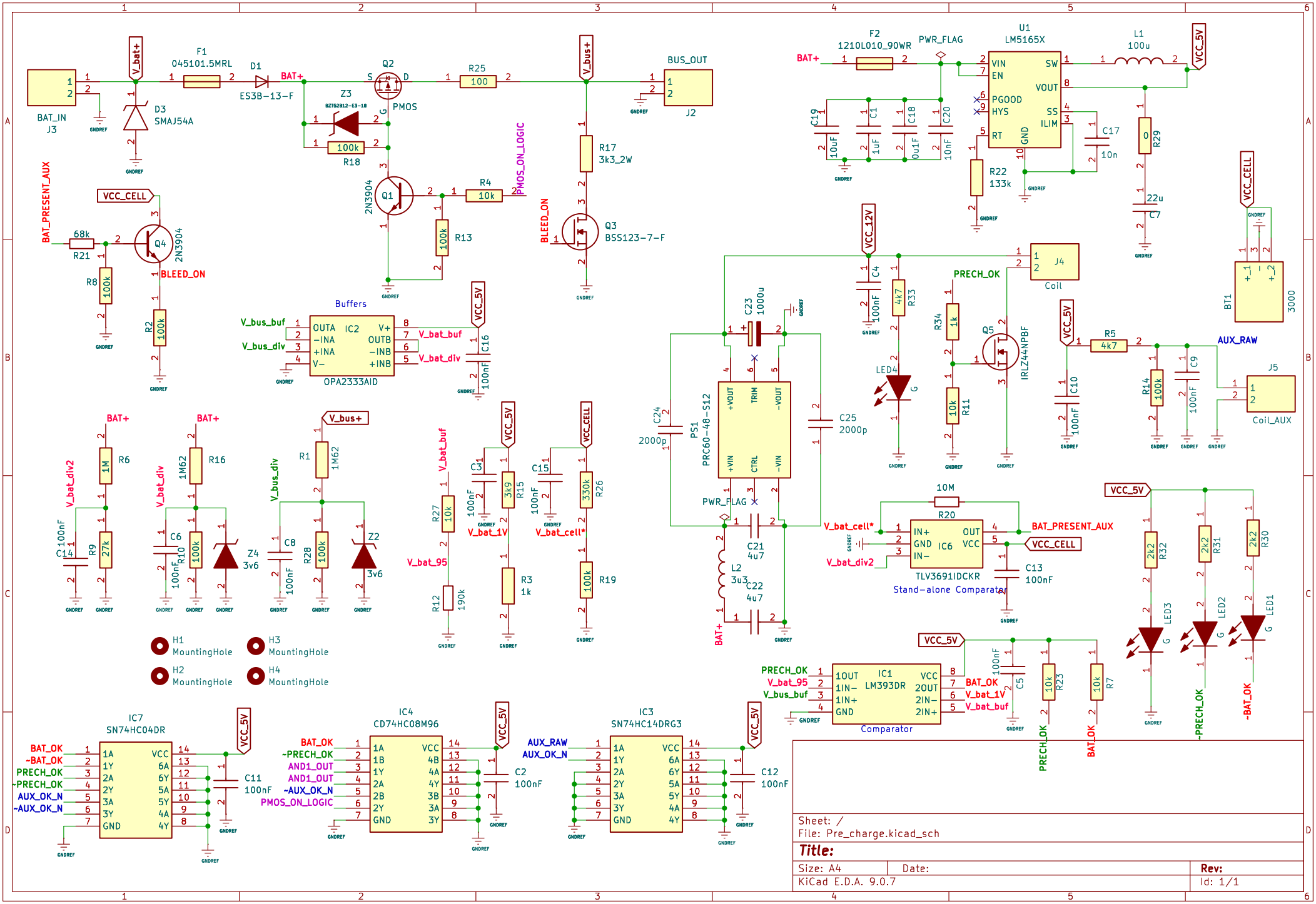
BAT_IN
J3
V_bat+
D3
SMAJ54A
F1
045101.5MRL
D1
ES3B-13-F
BAT+
Z3
BZT52B12-E3-18
Q2
PMOS
R25
100
V_bus+
BUS_OUT
J2
R18
100k
Q1
2N3904
R4
10k
PMOS_ON_LOGIC
R13
100k
R17
3k3_2W
BLEED_ON
Q3
BSS123-7-F
BAT_PRESENT_AUX
VCC_CELL
68k
R21
Q4
2N3904
BLEED_ON
R8
100k
R2
100k
Buffers
V_bus_buf
V_bus_div
IC2
OPA2333AID
OUTA
-INA
+INA
V-
V+
OUTB
-INB
+INB
V_bat_buf
V_bat_div
VCC_5V
C16
100nF
F2
1210L010_90WR
PWR_FLAG
U1
LM5165X
VIN
EN
PGOOD
HYS
RT
GND
SW
VOUT
SS
ILIM
L1
100u
C19
10uF
C1
1uF
C18
0u1F
C20
10nF
C17
10n
R22
133k
R29
0
C7
22u
VCC_12V
C23
1000u
C4
100nF
R33
4k7
J4
Coil
PRECH_OK
R34
1k
Q5
IRLZ44NPBF
R11
10k
LED4
G
VCC_CELL
BT1
3000
R5
4k7
AUX_RAW
R14
100k
C9
100nF
J5
Coil_AUX
C10
100nF
C24
2000p
PS1
PRC60-48-S12
+VOUT
TRIM
-VOUT
+VIN
CTRL
-VIN
C25
2000p
PWR_FLAG
C21
4u7
L2
3u3
C22
4u7
BAT+
BAT+
R6
1M
V_bat_div2
C14
100nF
R9
27k
BAT+
R16
1M62
V_bat_div
C6
100nF
R10
100k
Z4
3v6
V_bus+
R1
1M62
V_bus_div
C8
100nF
R28
100k
Z2
3v6
V_bat_buf
R27
10k
V_bat_95
R12
190k
VCC_5V
C31
100nF
R15
3k9
V_bat_1V
R3
1k
VCC_CELL
C15
100nF
R26
330k
V_bat_cell*
R19
100k
10M
R20
IN+
GND
IN-
OUT
VCC
IC6
TLV3691IDCKR
Stand-alone Comparator
V_bat_cell*
V_bat_div2
BAT_PRESENT_AUX
VCC_CELL
C13
100nF
VCC_5V
2k2
R32
2k2
R31
2k2
R30
LED3
LED2
LED1
G
~PRECH_OK
~BAT_OK
H1
MountingHole
H2
MountingHole
H3
MountingHole
H4
MountingHole
IC1
LM393DR
1OUT
1IN-
1IN+
GND
VCC
2OUT
2IN-
2IN+
Comparator
PRECH_OK
V_bat_95
V_bus_buf
BAT_OK
V_bat_1V
V_bat_buf
C5
100nF
R23
10k
R7
10k
PRECH_OK
BAT_OK
IC7
SN74HC04DR
BAT_OK
~BAT_OK
PRECH_OK
~PRECH_OK
AUX_OK_N
~AUX_OK_N
C11
100nF
IC4
CD74HC08M96
BAT_OK
~PRECH_OK
AND1_OUT
AND1_OUT
~AUX_OK_N
PMOS_ON_LOGIC
C2
100nF
IC3
SN74HC14DRG3
AUX_RAW
AUX_OK_N
C12
100nF
GNDREF
Sheet: /
File: Pre_charge.kicad_sch
Title:
Size: A4
Date:
Rev:
KiCad E.D.A. 9.0.7
Id: 1/1