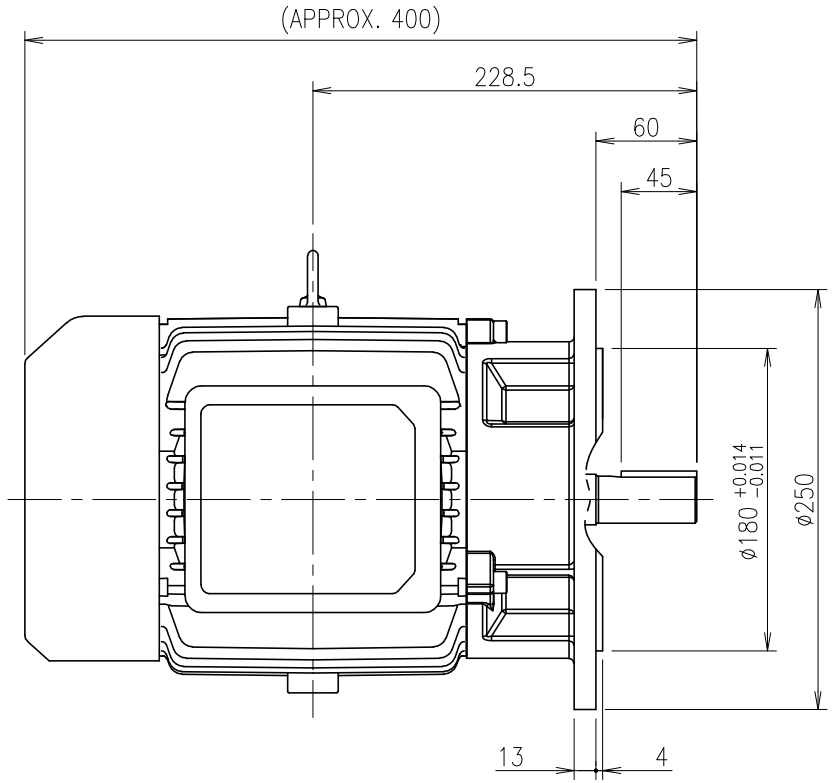

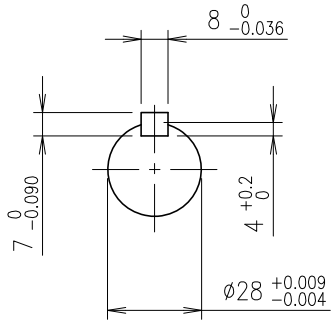

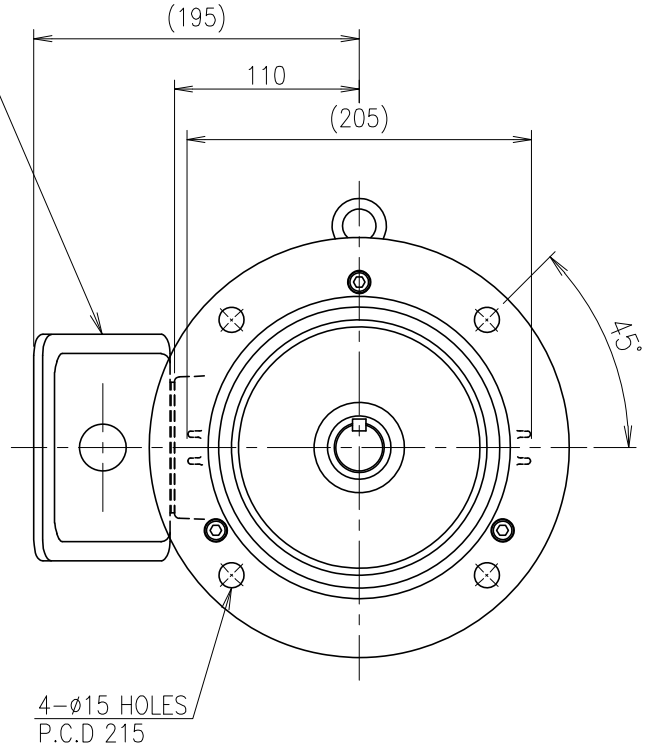

<NOTE>

1) TOLERANCE OF HOLES CONFORMS TO H14 OF ISO 2768.
2) DIMENSIONS AND SHAPE COULD VARY UPON DESIGN CONCEPT (EXCEPT FOR IEC STANDARD).

No.	DATE	DESCRIPTION of REVISION

A4(297X210mm) FORM CE-14-0100-4A4 2013.11.20

HYOSUNG HEAVY INDUSTRIES

TYPE A.C MOTOR 100L

DWG NAME	저압 유도전동기 외형도 OUTLINE DIMENSIONS				
DWG No.	ES1AS41703			UNIT	mm
				SCALE	1:4.5
DESIGNED	CHECKED	REVIEWED	APPROVED	DATE	2018-11-08
2018.11.08 이순의	2018.12.07 차준호		2018.12.07 김태현	REVISION No.	00
				THIRD ANGLE PROJECTION	
REF. No.	–				Ⓒ

The information written in this drawing is HYOSUNG HEAVY INDUSTRIES's property, and may not be disclosed and/or reproduced without the prior official permission of HYOSUNG HEAVY INDUSTRIES Corp.

이 도면에 표시된 모든 정보는 효성중공업(주)의 소유이며 당사의 사전 승인 없이 무단사용을 금합니다.