2.4 Plimpton 322

Plimpton 322 is one of the world's most famous ancient mathematical artefacts (figure 2.2). It is just one of several thousand mathematical documents surviving from ancient Iraq. In its current state, it comprises a four-column, fifteen-row table of Pythagorean triples, written in cuneiform script on a clay tablet measuring about 13 by 9 by 2 cm.

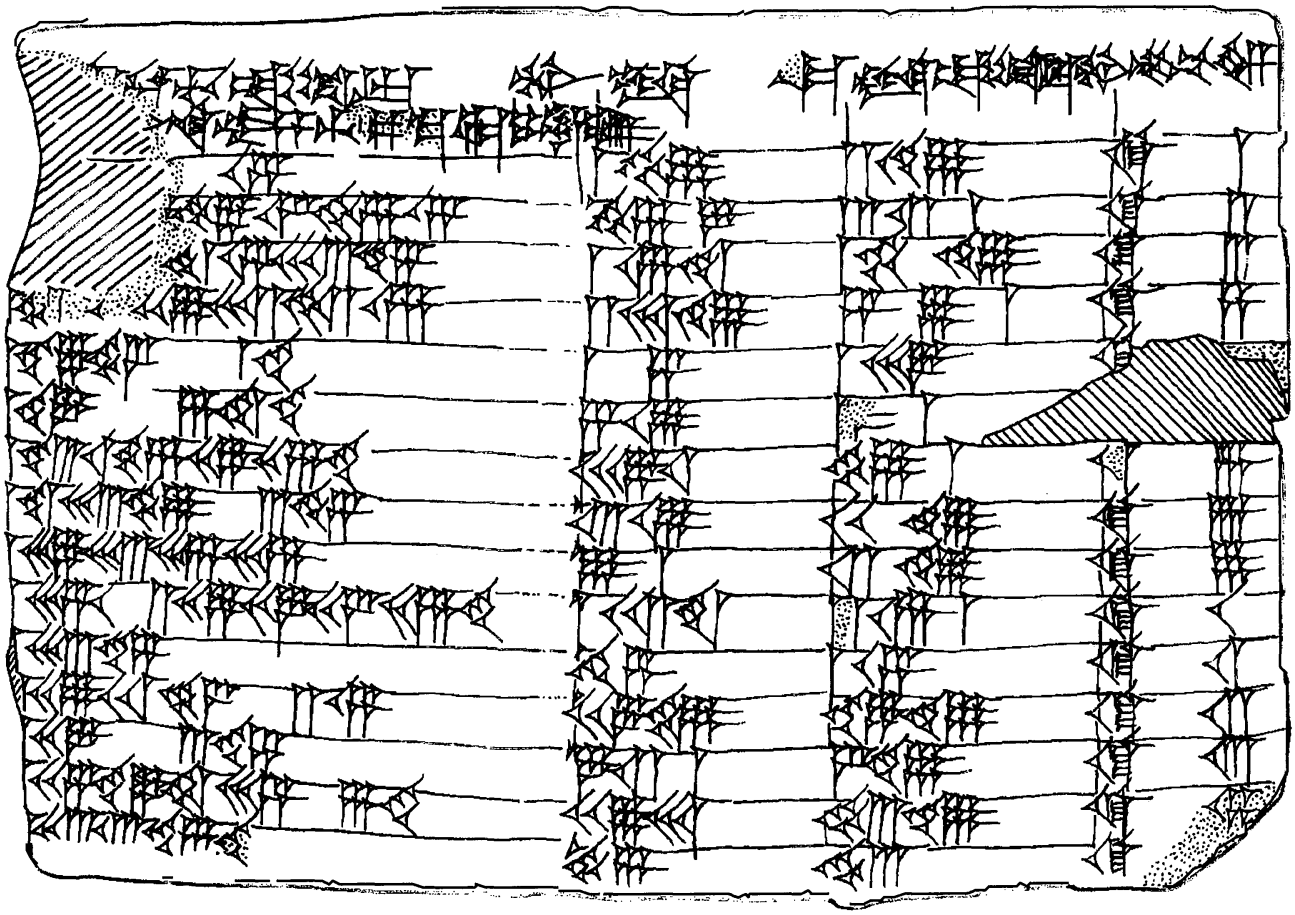

Figure 2.2 – Plimpton 322. Drawing by Eleanor Robson

Eleanor Robson analyzed the mathematical content of this tablet in its historical, archaeological and linguistical context[4]. Comparing the mathematics to other tablets around the same period gave general information about the tablet as well as clear insight to the mathematical methods used.

For instance, we are certain that our author was a male : all known female scribes from ancient Mesopotamia lived and worked much further north, in central and northern Iraq. The author must also have been someone who used literacy, arithmetic, and mathematical skills in the course of his working life (a teacher for example). He is also familiar with the format of documents used by temple and palace administrators.

On the next page, we shall explain the mathematical method the author most likely used to fill this tablet.

1. Prove algebraically that for all non zero x :

$$1 = \left(\frac{x + 1/x}{2}\right)^2 - \left(\frac{x - 1/x}{2}\right)^2$$

Hint: Which might be easier: expanding or factorizing each side?

2. To fill the tablet, the author didn't use algebra, but most likelly used a known algorithm of **completing the square**. The algorithm is illustrated in the visual below. Explain why the visual can show the equation in question 1?

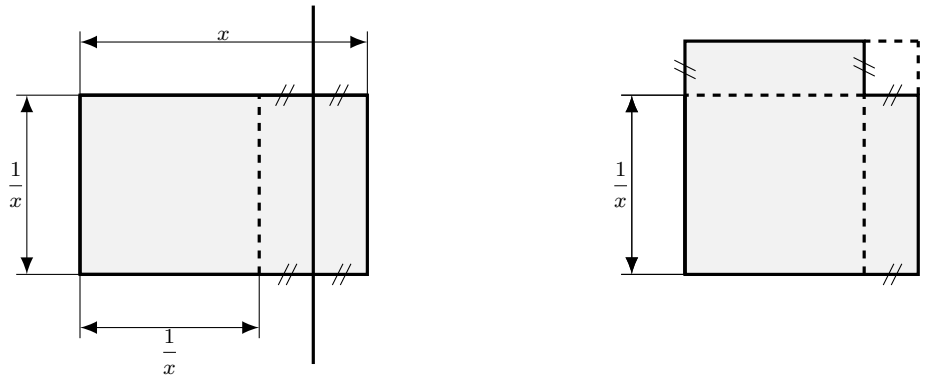

Hint: What is the area of the shaded region?

3. Explain why for any positive value x, the triangle below is a right angle triangle with $\dfrac{x+1/x}{2}$ the length of the hypotenuse.

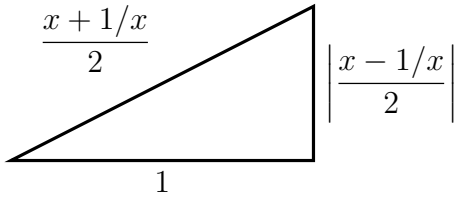

Our understanding of Plimpton 322 is :

1. There are 2 missing columns on the left. They should feature reciprocal pairs x and $\dfrac{1}{x}$ each four places long or shorter. The values chosen are among pairs frequently used in other Babylonian tablets around that time.
2. Column I shows $\left(\frac{x+1/x}{2}\right)^2$
3. Columns II and III show length s and d of a scaled up triangle similar to the triangle in question 3.
$$d\colon l\colon s = \tfrac{x+1/x}{2}\colon 1\colon \tfrac{x-1/x}{2}$$
4. Last column is the line number.

Missing columns		**Column I**	**Column II**	**Column III**	**Column IV**
x	$\frac{1}{x}$	$\left(\frac{x+1/x}{2}\right)^2$	s	d	
2; 24	0; 25	1; 59, 00, 15	1; 59	2; 49	line 1
.....					
2;	0; 30	1; 33, 45	0; 45	1; 15	line 11
.....					

Table 2.2 – Partial explanation of Plimpton 322. All values are given in Babylonian numeration.

4. Using table 2.2, check the algorithm for lines 11 then 1. Find the scale factor.