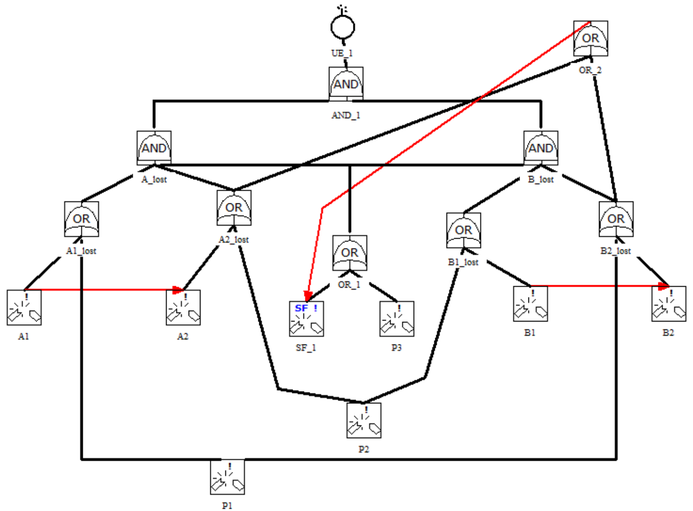
UE_1
AND
AND_1
AND
A_lost
AND
B_lost
OR
OR_2
OR
A1_lost
OR
A2_lost
OR
OR_1
OR
B1_lost
OR
B2_lost
A1
A2
SF_1
SF_1
P3
B1
B2
P2
P1

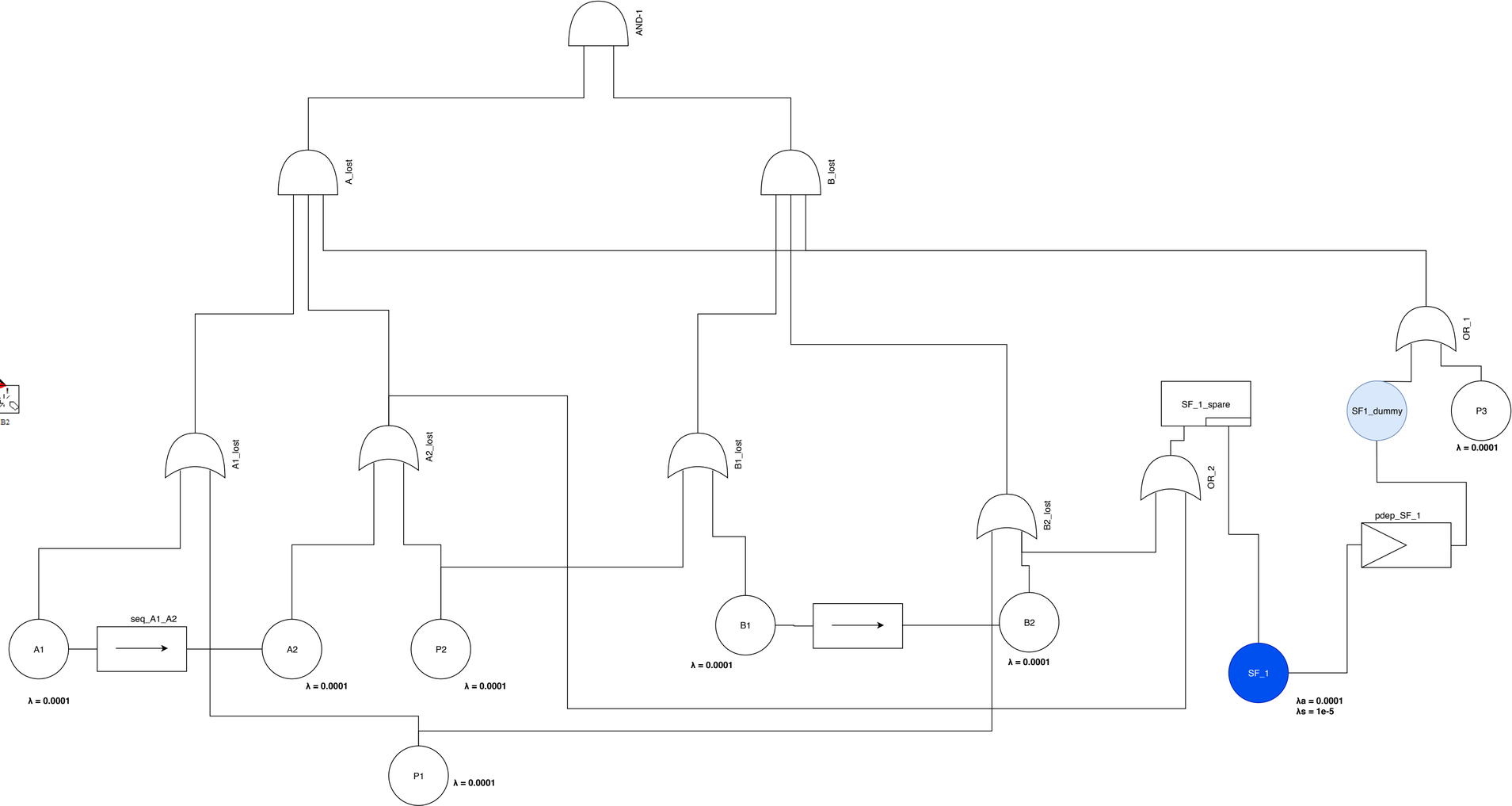
AND-1
A_lost
B_lost
A1_lost
A2_lost
B1_lost
B2_lost
OR_1
OR_2
SF_1_spare
SF1_dummy
P3
λ = 0.0001
pdep_SF_1
seq_A1_A2
A1
λ = 0.0001
A2
λ = 0.0001
P2
λ = 0.0001
B1
λ = 0.0001
B2
λ = 0.0001
SF_1
λa = 0.0001
λs = 1e-5
P1
λ = 0.0001